11-18-11 LETTING ITEM 080

F.A.U. RTE.	SECTION	COUNTY	TOTAL SHEETS	SHEET NO.
2760	100-B-1	COOK	28 ✗	1
	ILLINOIS	CONTRACT NO. 60M80		

D-91-167-11

✗ 28+1=29

FOR INDEX OF SHEETS, SEE SHEET NO. 2

STATE OF ILLINOIS
DEPARTMENT OF TRANSPORTATION
DIVISION OF HIGHWAYS

PROPOSED HIGHWAY PLANS

FAU ROUTE 2760 – SHERMER ROAD (SN 016–0814) OVER MIDDLE FORK NORTH BRANCH CHICAGO RIVER SECTION 100–B–1

BRIDGE BEAM AND DECK REPLACEMENT
COOK COUNTY
C–91–167–11

TRAFFIC DATA

SHERMER ROAD
EXISTING ADT : 12,500 (2010)
POSTED SPEED LIMIT: 30 MPH

IMPROVEMENT BEGINS STA. 205+33.10 (SN 016–0814)

IMPROVEMENT ENDS STA. 206+61.11

IMPROVEMENT IS LOCATED IN THE VILLAGE OF NORTHBROOK

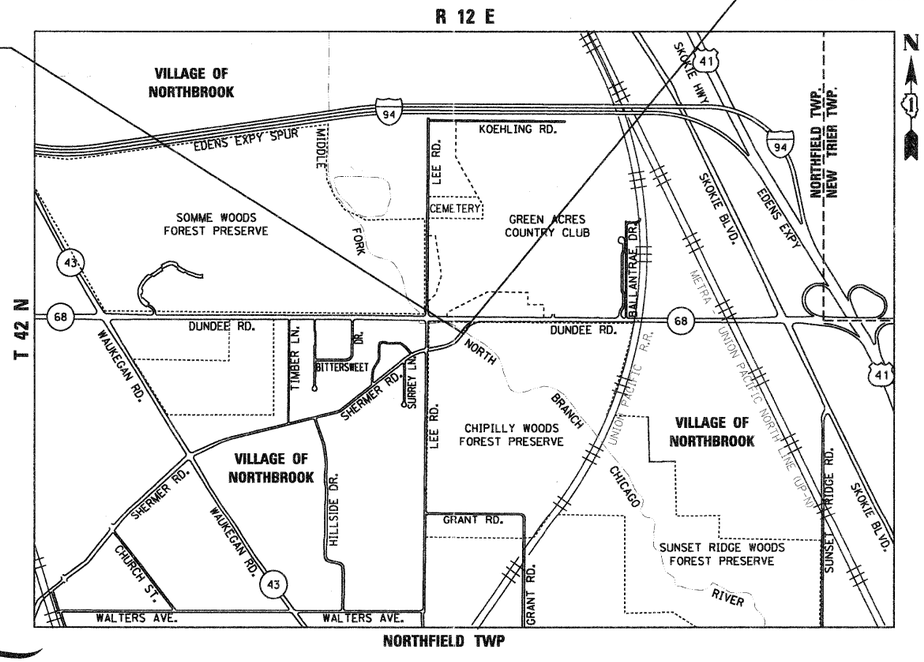

LOCATION MAP
NOT TO SCALE

GROSS LENGTH = 128.01 FT. = 0.024 MILE
NET LENGTH = 128.01 FT. = 0.024 MILE

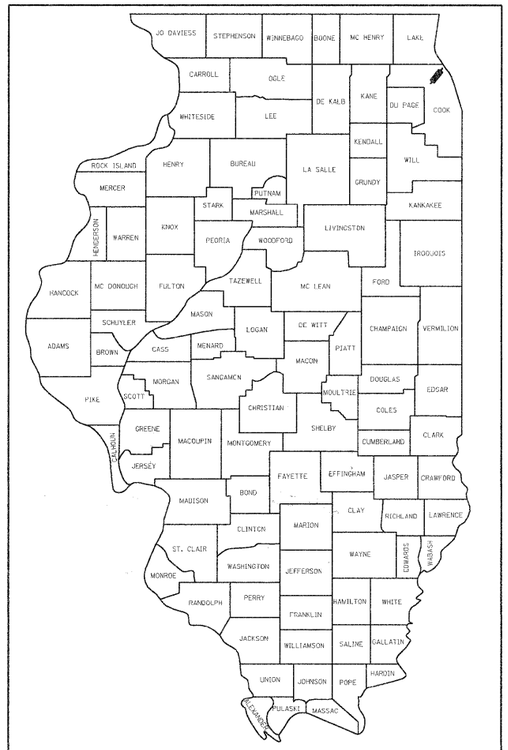

LOCATION OF SECTION INDICATED THUS:–

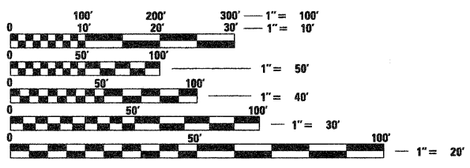

FULL SIZE PLANS HAVE BEEN PREPARED USING STANDARD ENGINEERING SCALES. REDUCED SIZED PLANS WILL NOT CONFORM TO STANDARD SCALES. IN MAKING MEASUREMENTS ON REDUCED PLANS, THE ABOVE SCALES MAY BE USED.

J.U.L.I.E.
JOINT UTILITY LOCATION INFORMATION FOR EXCAVATION
1–800–892–0123
OR 811

PROJECT ENGINEER ROBERT BORO
PROJECT MANAGER ISSAM RAYYAN

ENTRAN
5440 N. CUMBERLAND AVE, SUITE 111
CHICAGO, IL 60656

CONTRACT NO. 60M80

LICENSED PROFESSIONAL ENGINEER THOMAS M. HEIN 062-053199 STATE OF ILLINOIS

THOMAS M. HEIN, P. E.
IL. LIC. NO. 062-053199
EXP 11-30-11
DATE 9-7-11

STATE OF ILLINOIS
DEPARTMENT OF TRANSPORTATION
DIVISION OF HIGHWAYS

SUBMITTED SEPTEMBER 8, 20 11
Dian M. O'Keefe for
DEPUTY DIRECTOR OF HIGHWAYS, REGION ENGINEER
October 14 20 11
Scott E. Stitt, P.E. for
acting ENGINEER OF DESIGN AND ENVIRONMENT
October 14 20 11
Christine M. Reed for
DIRECTOR OF HIGHWAYS, CHIEF ENGINEER

PRINTED BY THE AUTHORITY OF THE STATE OF ILLINOIS

INDEX OF SHEETS
****

SHEET NO.	DESCRIPTION
1	TITLE SHEET
2	INDEX OF SHEETS, GENERAL NOTES, COMMITMENTS, AND HIGHWAY STANDARDS
3	SUMMARY OF QUANTITIES
4	TYPICAL SECTIONS
5 - 6	SCHEDULE OF QUANTITIES
7	ALIGNMENT, TIES, AND BENCHMARKS
8	EXISTING AND PROPOSED PLAN AND PROFILE
9	MAINTENANCE OF TRAFFIC - DETOUR ROUTE
9A.	TEMPORARY TRAFFIC SIGNAL PLAN
10	PAVEMENT MARKING, EROSION CONTROL, & LANDSCAPING PLAN
11 - 24	STRUCTURAL PLANS
25 - 28	DISTRICT DETAILS

GENERAL NOTES - MISCELLANEOUS
****

BEFORE STARTING ANY EXCAVATION, THE CONTRACTOR SHALL CALL "JULIE" AT (800) 892-0123 FOR FIELD LOCATIONS OF BURIED ELECTRIC, TELEPHONE AND GAS FACILITIES. (48 HOURS NOTIFICATION IS REQUIRED).

TEN FOOT (10-FT) TRANSITIONS SHALL BE USED TO MATCH PROPOSED ITEMS OF WORK TO EXISTING ITEMS IN THE FIELD, UNLESS OTHERWISE SHOWN. THE TRANSITIONS SHALL BE PAID FOR AT THE CONTRACT UNIT PRICE FOR THE PROPOSED ITEM OF WORK SPECIFIED.

THE CONTRACTOR SHALL COORDINATE CONSTRUCTION ACTIVITIES WITH THE RESPECTIVE UTILITY COMPANIES AND THE VILLAGE OF NORTHBROOK.

THE CONTRACTOR WILL NOT BE ALLOWED TO SET UP A YARD OR FIELD OFFICE ON STATE PROPERTY WITHOUT WRITTEN PERMISSION FROM THE DEPARTMENT.

ALL DAMAGE TO EXISTING PAVEMENT MARKINGS OR RAISED REFLECTIVE PAVEMENT MARKINGS OUTSIDE THE REMOVAL LIMITS SHOWN ON THE PLANS SHALL BE REPLACED AT NO ADDITIONAL COST TO THE DEPARTMENT.

BEFORE BEGINNING ANY WORK, THE CONTRACTOR SHALL RETAIN AND RECORD FOR FUTURE REFERENCE, ALL EXISTING PAVEMENT MARKING LINES AND RAISED REFLECTIVE PAVEMENT MARKERS IN ORDER THAT THESE LOCATIONS CAN BE RE-ESTABLISHED FOR STRIPING. EXACT LOCATIONS OF ALL PAVEMENT MARKINGS SHALL BE AS DIRECTED BY THE ENGINEER.

IT SHALL BE THE CONTRACTORS RESPONSIBILITY TO VERIFY ALL DIMENSIONS AND CONDITIONS EXISTING IN THE FIELD PRIOR TO CONSTRUCTION AND ORDERING MATERIALS.

THE RESIDENT ENGINEER SHALL CONTACT THE TRAFFIC CONTROL SUPERVISOR AT (847) 705-4470 A MINIMUM OF 72 HOURS PRIOR TO THE PLACEMENT ON ANY TEMPORARY TRAFFIC CONTROL DEVICES.

THE RESIDENT ENGINEER SHALL CONTACT MR. WALLY CZARNY, AREA TRAFFIC FIELD ENGINEER AT (847) 715-8419 A MINIMUM OF TWO WEEKS PRIOR TO PLACEMENT OF PERMANENT PAVEMENT MARKINGS.

DO NOT SCALE PLANS FOR CONSTRUCTION DIMENSIONS.

SAW CUTS WILL NOT BE PAID FOR SEPARATELY, BUT SHALL BE INCLUDED IN THE COST OF THE ITEM BEING REMOVED.

ANY REFERENCE TO STANDARDS THROUGHOUT THE PLANS OR SPECIAL PROVISIONS SHALL BE INTERPRETED AS THE LATEST STANDARD OF THE DEPARTMENT AS SHOWN.

WHERE SECTION OR SUBSECTION MONUMENTS ARE ENCOUNTERED, THE ENGINEER SHALL BE NOTIFIED BEFORE SUCH MONUMENTS ARE REMOVED. THE CONTRACTOR SHALL PROTECT AND CAREFULLY PRESERVE ALL PROPERTY MARKS AND MONUMENTS. THE ENGINEER, OR AN AUTHORIZED SURVEYOR OR AGENT WILL WITNESS OR OTHERWISE REFERENCE AND RESET MONUMENTS AS NECESSARY. ALL PROPERTY CORNERS EXCEPT THOSE WITHIN AREAS WHERE THE SCHEDULE SHOWS PLACEMENT OF R.O.W. MARKERS SHALL REMAIN UNDISTURBED.

THE CONTRACTOR AS REQUIRED, SHALL OBTAIN ALL NECESSARY PERMITS PRIOR TO COMMENCING WITH CONSTRUCTION.

THE CONTRACTOR WILL BE REQUIRED TO COMPLY WITH STATE OR LOCAL REGULATIONS REGARDING AIR, WATER, AND NOISE POLLUTION.

THE CONTRACTORS OPERATIONS AND TEMPORARY STORAGE ACTIVITIES SHALL BE LIMITED TO THE WORK AREA AND/OR CONSTRUCTION LIMITS. ANY ADDITIONAL STAGING AREAS ADJACENT TO THE PROJECT ARE SUBJECT TO PRIOR APPROVAL BY THE ENGINEER. NO ADDITIONAL COMPENSATION WILL BE ALLOWED TO THE CONTRACTOR FOR COMPLIANCE WITH THE ABOVE REQUIREMENTS.

THE CONTRACTORS PERSONNEL SHALL NOT BE ALLOWED TO PARK PERSONAL VEHICLES IN THE WORK AREA AND/OR CONSTRUCTION LIMITS.

ACCESS SHALL BE PROVIDED AT ALL TIMES TO PROPERTIES ABUTTING THE PROPOSED IMPROVEMENT.

GENERAL NOTES - ROADWAY
****

THE CONTRACTOR SHALL USE CARE IN GRADING OR EXCAVATING NEAR ANY AND ALL EXISTING ITEMS WHICH WILL NOT BE REMOVED. ANY DAMAGE DONE TO EXISTING ITEMS BY THE CONTRACTOR SHALL BE REPAIRED BY HIM AT HIS OWN EXPENSE.

BUTT JOINTS WILL BE INSTALLED AT THE ENDS OF ALL RESURFACING (WHERE RESURFACING MEETS EXISTING PAVEMENT), IN ACCORDANCE WITH THE BUTT JOINT AND HOT-MIX ASPHALT TAPER DETAILS SHEET INCLUDED IN THE PLANS, UNLESS OTHERWISE SPECIFIED.

THE REMOVAL OF SINGLE RAIL, DOUBLE RAIL, RUB RAIL, AND TERMINAL SECTIONS (TAPERS AND END SECTIONS) SHALL BE PAID FOR AT THE CONTRACT UNIT PRICE COST PER LINEAL FOOT FOR STEEL PLATE BEAM GUARD RAIL REMOVAL.

THE ENGINEER SHALL BE THE SOLE JUDGE CONCERNING CURING TIME FOR THE VARIOUS HOT-MIX ASPHALT LIFTS.

GENERAL NOTES - DRAINAGE
****

THE CONTRACTOR SHALL MAINTAIN THE SURFACE DRAINAGE OF THE ROAD DURING CONSTRUCTION OF THIS PROJECT. THIS WORK SHALL NOT BE PAID FOR SEPARATELY, BUT SHALL BE CONSIDERED INCIDENTAL TO THE CONTRACT.

ANY LOOSE MATERIAL DEPOSITED IN THE FLOW LINE OF DITCHES, GUTTERS, CROSSROAD PIPES, OR DRAINAGE STRUCTURES DUE TO CONSTRUCTION OPERATIONS SHALL BE REMOVED AT THE CLOSE OF EACH WORKING DAY. AT THE CONCLUSION OF CONSTRUCTION OPERATIONS, ALL STRUCTURES SHALL BE FREE OF DIRT AND DEBRIS. THIS WORK SHALL NOT BE PAID FOR SEPARATELY, BUT SHALL BE CONSIDERED INCIDENTAL TO THE CONTRACT.

GENERAL NOTES - UTILITIES
****

THE CONTRACTOR SHALL PROTECT EXISTING AND NEW UTILITIES. WHEN REQUIRED BY THE ENGINEER, THE CONTRACTOR SHALL BRACE AND SUPPORT THE UTILITIES PROPERLY IN ORDER TO PREVENT SETTLEMENT, DISPLACEMENT, OR DAMAGE TO THE UTILITIES. THE PROTECTION OF THE UTILITIES AS SPECIFIED HEREIN WILL NOT BE PAID FOR SEPARATELY, BUT SHALL BE CONSIDERED AS INCIDENTAL TO THE CONTRACT.

THE CONTRACTOR SHALL BE RESPONSIBLE FOR CONTACTING THE OWNERS OF ALL EXISTING FACILITIES SO THE UTILITIES AND THEIR APPURTENANCES MAY BE LOCATED AND ADJUSTED OR MOVED, IF NECESSARY, PRIOR TO THE START OF CONSTRUCTION OPERATIONS. THE CONTRACTOR SHALL COOPERATE WITH ALL UTILITY OWNERS AS PROVIDED FOR IN THE STANDARD SPECIFICATIONS.

GENERAL NOTES - LANDSCAPING
****

FERTILIZER NUTRIENTS SHALL BE APPLIED AT THE FOLLOWING RATES PER ACRE:

NITROGEN FERTILIZER NUTRIENT - 90 LBS./ACRE
PHOSPHORUS FERTILIZER NUTRIENT - 90 LBS./ACRE
POTASSIUM FERTILIZER NUTRIENT - 90 LBS./ACRE

GENERAL NOTES - EROSION AND SEDIMENT CONTROL
****

TEMPORARY EROSION CONTROL SEEDING SHALL BE PROVIDED AT ALL ERODIBLE BARE EARTH AREAS. REFER TO SPECIAL PROVISIONS.

ALL EROSION CONTROL MEASURES SHALL BE IN ACCORDANCE WITH THE REQUIREMENTS OF THE STANDARD SPECIFICATIONS AND OF THE APPLICABLE STATE STANDARDS FOR THE ENTIRE DURATION OF THE CONTRACT, OR UNTIL SUCH A TIME AS DIRECTED BY THE ENGINEER.

AT ANY AREA WHERE THERE IS NO PROPOSED GRADING, THE EXISTING GROUND COVER SHALL REMAIN.

COMMITMENTS
****

NONE

HIGHWAY STANDARDS
****

280001-05 TEMPORARY EROSION CONTROL SYSTEMS

515001-03 NAME PLATE FOR BRIDGES

606001-04 CONCRETE CURB TYPE B AND COMBINATION CONCRETE CURB AND GUTTER

630001-09 STEEL PLATE BEAM GUARDRAIL

630301-05 SHOULDER WIDENING FOR TYPE 1(SPECIAL) GUARDRAIL TERMINALS

631011-07 TRAFFIC BARRIER TERMINAL, TYPE 2

631031-09 TRAFFIC BARRIER TERMINAL, TYPE 6

635006-03 REFLECTOR AND TERMINAL MARKER PLACEMENT

635011-02 REFLECTOR MARKER AND MOUNTING DETAILS

667101-01 PERMANENT SURVEY MARKERS

701701-07 URBAN LANE CLOSURE, MULTILANE INTERSECTION

701801-04 LANE CLOSURE, MULTILANE 1W OR 2W CROSSWALK OR SIDEWALK CLOSURE

701901-01 TRAFFIC CONTROL DEVICES

000001-06 STANDARD SYMBOLS, ABBREVIATIONS AND PATTERNS

SUMMARY OF QUANTITIES

CODE NO.	ITEM	UNIT	TOTAL QUANTITY (URBAN 100% STATE)	CONSTRUCTION TYPE CODE: ROADWAY 0004	CONSTRUCTION TYPE CODE: BRIDGE 0014
20100110	TREE REMOVAL (6 TO 15 UNITS DIAMETER)	UNIT	66	66	0
20101100	TREE TRUNK PROTECTION	EACH	11	11	0
20200100	EARTH EXCAVATION	CU YD	10	10	0
20201200	REMOVAL AND DISPOSAL OF UNSUITABLE MATERIAL	CU YD	58	58	0
20400800	FURNISHED EXCAVATION	CU YD	89	89	0
21101615	TOPSOIL FURNISH AND PLACE, 4"	SQ YD	657	657	0
25000210	SEEDING, CLASS 2A	ACRE	0.14	0.14	0.00
25000400	NITROGEN FERTILIZER NUTRIENT	POUND	12	12	0
25000500	PHOSPHORUS FERTILIZER NUTRIENT	POUND	12	12	0
25000600	POTASSIUM FERTILIZER NUTRIENT	POUND	12	12	0
25100630	EROSION CONTROL BLANKET	SQ YD	657	657	0
28000400	PERIMETER EROSION BARRIER	FOOT	594	594	0
28000510	INLET FILTERS	EACH	2	2	0
31101200	SUBBASE GRANULAR MATERIAL, TYPE B 4"	SQ YD	73	73	0
40600100	BITUMINOUS MATERIALS (PRIME COAT)	GALLON	41	41	0
40600300	AGGREGATE (PRIME COAT)	TON	1	1	0
40600635	LEVELING BINDER (MACHINE METHOD), N70	TON	9	9	0
40600982	HOT-MIX ASPHALT SURFACE REMOVAL - BUTT JOINT	SQ YD	24	24	0
40603340	HOT-MIX ASPHALT SURFACE COURSE, MIX "D", N70	TON	17	17	0
42001300	PROTECTIVE COAT	SQ YD	55	55	0
42400200	PORTLAND CEMENT CONCRETE SIDEWALK 5 INCH	SQ FT	134	134	0
44000500	COMBINATION CURB AND GUTTER REMOVAL	FOOT	145	145	0
44000600	SIDEWALK REMOVAL	SQ FT	596	596	0
48101498	AGGREGATE SHOULDERS, TYPE B 4"	SQ YD	5	5	0
50101500	REMOVAL OF EXISTING SUPERSTRUCTURES	EACH	1	0	1
50102400	CONCRETE REMOVAL	CU YD	3.6	0.0	3.6
50104000	BRIDGE RAIL REMOVAL	FOOT	196	0	196
50300255	CONCRETE SUPERSTRUCTURE	CU YD	42.3	0.0	42.3
50300260	BRIDGE DECK GROOVING	SQ YD	139	0	139
50300300	PROTECTIVE COAT	SQ YD	320	0	320
50400505	PRECAST PRESTRESSED CONCRETE DECK BEAMS (27" DEPTH)	SQ FT	1,877	0	1,877
50800205	REINFORCEMENT BARS, EPOXY COATED	POUND	8,580	0	8,580
50900105	ALUMINUM RAILING, TYPE L	FOOT	180	0	180
51500100	NAME PLATES	EACH	1	0	1
52000110	PREFORMED JOINT STRIP SEAL	FOOT	40.5	0.0	40.5

	CODE NO.	ITEM	UNIT	TOTAL QUANTITY (URBAN 100% STATE)	CONSTRUCTION TYPE CODE: ROADWAY 0004	CONSTRUCTION TYPE CODE: BRIDGE 0014
	59000200	EPOXY CRACK INJECTION	FOOT	60	0	60
	60605000	COMBINATION CONCRETE CURB AND GUTTER, TYPE B-6.24	FOOT	138	138	0
*	63000001	STEEL PLATE BEAM GUARDRAIL, TYPE A, 6 FOOT POSTS	FOOT	150	150	0
*	63100045	TRAFFIC BARRIER TERMINAL, TYPE 2	EACH	1	1	0
*	63100085	TRAFFIC BARRIER TERMINAL, TYPE 6	EACH	4	4	0
*	63100167	TRAFFIC BARRIER TERMINAL, TYPE 1 (SPECIAL) TANGENT	EACH	3	3	0
	63200310	GUARDRAIL REMOVAL	FOOT	374	374	0
	66700205	PERMANENT SURVEY MARKERS, TYPE I	EACH	1	1	0
	67000400	ENGINEER'S FIELD OFFICE, TYPE A	CAL MO	4	4	0
	67100100	MOBILIZATION	L SUM	1.0	1.0	0.0
~~*~~	~~78000200~~	~~THERMOPLASTIC PAVEMENT MARKING - LINE 4"~~	~~FOOT~~	~~307~~	~~307~~	~~0~~
*	78008210	POLYUREA PAVEMENT MARKING TYPE I - LINE 4"	FOOT	512	512	0
*	78100100	RAISED REFLECTIVE PAVEMENT MARKER	EACH	4	4	0
*	78100105	RAISED REFLECTIVE PAVEMENT MARKER (BRIDGE)	EACH	4	0	4
*	78200100	MONODIRECTIONAL PRISMATIC BARRIER REFLECTOR	EACH	8	8	0
*	78200410	GUARDRAIL MARKERS, TYPE A	EACH	7	7	0
*	78201000	TERMINAL MARKER - DIRECT APPLIED	EACH	3	3	0
	78300200	RAISED REFLECTIVE PAVEMENT MARKER REMOVAL	EACH	8	8	0
*	85000200	MAINTENANCE OF EXISTING TRAFFIC SIGNAL INSTALLATION	EACH	1	1	0
	X4401198	HOT-MIX ASPHALT SURFACE REMOVAL, VARIABLE DEPTH	SQ YD	180	180	0
	X5030305	CONCRETE WEARING SURFACE, 5"	SQ YD	214	0	214
	X7010216	TRAFFIC CONTROL AND PROTECTION, (SPECIAL)	L SUM	1.0	1.0	0.0
	X7240600	REMOVE AND RE-ERECT EXISTING SIGN	EACH	3	3	0
	Z0001900	ASBESTOS BEARING PAD REMOVAL	EACH	28	0	28
	Z0012754	STRUCTURAL REPAIR OF CONCRETE (DEPTH EQUAL TO OR LESS THAN 5 INCHES)	SQ FT	5	0	5
	Z0013798	CONSTRUCTION LAYOUT	L SUM	1.0	1.0	0.0
	Z0030850	TEMPORARY INFORMATION SIGNING	SQ FT	51	51	0
	Z0073510	TEMPORARY TRAFFIC SIGNAL TIMING	EACH	1	1	0

* SPECIALTY ITEMS

FILE NAME = gt\projects\202155.010\cadd\civil\sht\01L664-03sht-303.dgn

ENTRAN

USER NAME = 2PIENID	DESIGNED - DJB	REVISED -	
	DRAWN - ENTRAN	REVISED -	
PLOT SCALE = 50.0000 ' / IN.	CHECKED - TMH	REVISED -	
PLOT DATE = 8/31/2011	DATE - 08/02/11	REVISED -	

STATE OF ILLINOIS
DEPARTMENT OF TRANSPORTATION

SHERMER ROAD OVER MIDDLE FORK NORTH BRANCH CHICAGO RIVER
SUMMARY OF QUANTITIES

SCALE: 50.0000 ' / IN. SHEET NO. OF SHEETS STA. TO STA.

Rev

F.A.U. RTE.	SECTION	COUNTY	TOTAL SHEETS	SHEET NO.
2760	100-B-1	COOK	28	3

CONTRACT NO. 60M80

FED. ROAD DIST. NO. 1 | ILLINOIS | FED. AID PROJECT

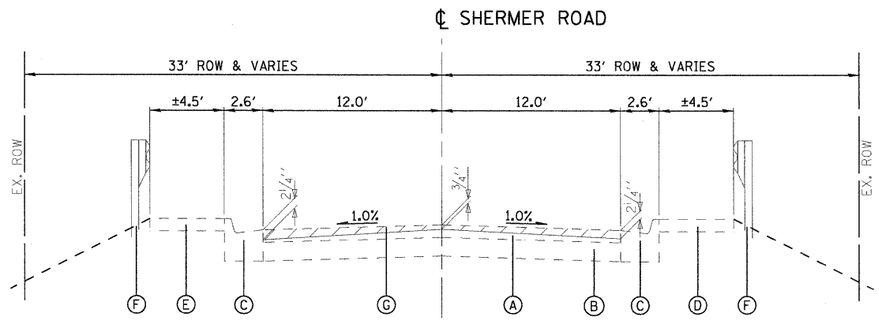

EXISTING TYPICAL SECTION

FACING NORTH
STA. 205+33.10 TO 206+61.11
BRIDGE OMISSION STA. 205+71.44 TO STA. 206+22.78
N.T.S.

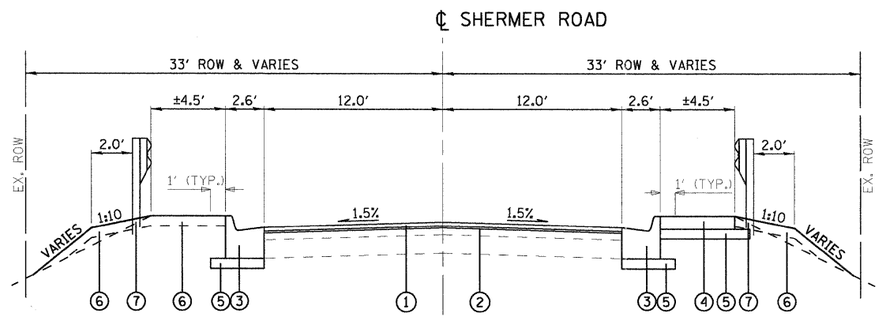

PROPOSED TYPICAL SECTION

FACING NORTH
STA. 205+33.10 TO 206+61.11
BRIDGE OMISSION STA. 205+71.44 TO STA. 206+22.78
N.T.S.

EXISTING LEGEND

- (A) EXIST. HMA PAVEMENT, ±3"
- (B) EXIST. PCC PAVEMENT, ±9"
- (C) EXIST. COMBINATION CONCRETE CURB AND GUTTER
- (D) EXIST. PCC SIDEWALK
- (E) EXIST. GRASS AND TOPSOIL
- (F) EXIST. GUARDRAIL
- (G) HMA SURFACE REMOVAL, VARIABLE DEPTH

PROPOSED LEGEND

- (1) HMA SURFACE COURSE, MIX "D", N70; 1½"
- (2) LEVELING BINDER (MACHINE METHOD), N70; ¾"
- (3) COMBINATION CONCRETE CURB & GUTTER, TYPE B6.24
- (4) PORTLAND CEMENT CONCRETE SIDEWALK, 5"
- (5) SUBBASE GRANULAR MATERIAL, TYPE B 4"
- *(6) TOPSOIL AND SEEDING, CL 2A
- *(7) STEEL PLATE BEAM GUARDRAIL, TYPE A, 6 FOOT POSTS

* NOTE: LIMITS OF THESE PROPOSED ITEMS TO BE DETERMINED IN THE FIELD BY THE RESIDENT ENGINEER.

HMA MIXTURE REQUIREMENTS

MIX DESIGNS	AIR VOIDS
RESURFACING	
HMA SURFACE COURSE, MIX 'D', N70, (IL-9.5mm); 1½"	4% @ 70 GYRATIONS
LEVELING BINDER, N70, (IL-9.5mm); ¾"	4% @ 70 GYRATIONS

NOTE: THE UNIT WEIGHT USED TO CALCULATE ALL HOT-MIX ASPHALT SURFACE MIXTURES IS 112 LBS/SY/IN.

THE "AC TYPE" FOR POLYMERIZED HMA MIXES SHALL BE "SBS/SBR PG 70 -22" AND FOR NON-POLYMERIZED HMA THE "AC TYPE" SHALL BE "PG 64 -22" UNLESS MODIFIED BY DISTRICT ONE SPECIAL PROVISIONS. FOR "PERCENT OF RAP" SEE DISTRICT ONE SPECIAL PROVISIONS.

FILE NAME = g:\project\2102155.010\cadd\civil\sht\D111664-04sht-typical.dgn

ENTRAN	USER NAME = 2PIENID	DESIGNED - DJB	REVISED -	STATE OF ILLINOIS DEPARTMENT OF TRANSPORTATION	SHERMER ROAD OVER MIDDLE FORK NORTH BRANCH CHICAGO RIVER TYPICAL SECTIONS	F.A.U. RTE. 2760	SECTION 100-B-1	COUNTY COOK	TOTAL SHEETS 28	SHEET NO. 4
		DRAWN - ENTRAN	REVISED -					CONTRACT NO. 60M80		
	PLOT SCALE = 50.00 ' / IN.	CHECKED - TMH	REVISED -							
	PLOT DATE = 8/31/2011	DATE - 08/02/11	REVISED -		SCALE: 50.00 ' / IN. SHEET NO. OF SHEETS STA. TO STA.	FED. ROAD DIST. NO. 1	ILLINOIS	FED. AID PROJECT		

SCHEDULE OF QUANTITIES

20100110 TREE REMOVAL (6 TO 15 UNITS DIAMETER)

STATION	OFFSET(FT)		UNIT
204+15.4	22.8 RT		8.00
204+22.6	25.4 RT		10.00
204+45.6	25.3 RT		12.00
204+47.5	24.7 RT		6.00
205+20.7	25.5 RT		6.00
205+24.3	25.4 RT	(3 AT 6" DIA. EACH)	18.00
205+26.7	25.0 RT		6.00
		TOTAL =	66

20101100 TREE TRUNK PROTECTION

STATION	OFFSET(FT)	EACH
204+59.4	29.0 RT	1.0
204+56.9	22.3 RT	1.0
204+61.1	28.8 RT	1.0
204+64.6	29.7 RT	1.0
204+83.8	29.5 RT	1.0
204+91.8	29.4 LT	1.0
205+00.3	35.0 RT	1.0
205+04.3	29.4 RT	1.0
205+14.0	29.9 RT	1.0
205+53.3	24.9 RT	1.0
206+45.0	29.0 LT	1.0
	TOTAL =	11

20200100 EARTH EXCAVATION

STATION	CUT/FILL(SF)	-	STATION	CUT/FILL(SF)	CU YD
203+44.5	0.0	-	203+50.0	0.0	0.0
203+50.0	0.0	-	204+00.0	0.0	0.0
204+00.0	0.0	-	204+50.0	0.0	0.0
204+50.0	0.0	-	205+00.0	0.0	0.0
205+00.0	0.0	-	205+50.0	6.9	6.4
205+50.0	1.7	-	205+73.1	0.0	0.7
BRIDGE OMISSION					
206+20.5	0.0	-	206+50.0	4.3	2.4
206+50.0	0.0	-	207+00.0	0.0	0.0
207+00.0	0.0	-	207+50.0	0.0	0.0
				TOTAL =	10

20201200 REMOVAL AND DISPOSAL OF UNSUITABLE MATERIAL

STATION	CUT/FILL(SF)	-	STATION	CUT/FILL(SF)	CU YD
203+44.5	0.0	-	203+50.0	1.7	0.2
203+50.0	1.7	-	204+00.0	6.4	7.6
204+00.0	6.4	-	204+50.0	4.6	10.3
204+50.0	4.6	-	205+00.0	9.2	12.8
205+00.0	9.2	-	205+50.0	8.1	16.0
205+50.0	8.1	-	205+73.1	0.0	3.5
BRIDGE OMISSION					
206+20.5	0.0	-	206+50.0	5.0	2.7
206+50.0	5.0	-	207+00.0	0.0	4.6
207+00.0	0.0	-	207+50.0	0.0	0.0
				TOTAL =	58

20400800 FURNISHED EXCAVATION

STATION	CUT/FILL(SF)	-	STATION	CUT/FILL(SF)	CU YD
203+44.5	0.0	-	203+50.0	0.6	0.1
203+50.0	0.6	-	204+00.0	13.8	13.3
204+00.0	13.8	-	204+50.0	2.3	14.9
204+50.0	2.3	-	205+00.0	25.3	25.5
205+00.0	25.3	-	205+50.0	8.5	31.3
205+50.0	8.5	-	205+73.1	0.0	3.6
BRIDGE OMISSION					
206+20.5	0.0	-	206+50.0	5.1	2.8
206+50.0	5.1	-	207+00.0	0.0	4.7
207+00.0	0.0	-	207+50.0	0.0	0.0

TOTAL EMBANKMENT QUANTITY = 96.1

FURNISHED EX. = EMBANKMENT - [SUITABLE EX. X (1 - SHRINK FACTOR)]

SUITABLE EX 9.5 CU YD (REFER TO 20200100 EARTH EX)
SHRINKAGE = 25.0 %

CALCULATED FURNISHED EXCAVATION = 89.0

TOTAL = 89

21101615 TOPSOIL FURNISH AND PLACE, 4"

STATION	WIDTH(FT)	-	STATION	WIDTH(FT)	SQ YD
LEFT SIDE					
203+28.3	0.0	-	203+35.9	1.7	0.7
203+35.9	1.7	-	203+50.0	3.8	4.3
203+50.0	3.8	-	204+00.0	10.5	39.8
204+00.0	10.5	-	204+50.0	7.3	49.6
204+50.0	7.3	-	205+00.0	12.1	53.8
205+00.0	15.0	-	205+48.1	18.2	88.7
205+48.1	12.5	-	205+50.0	12.6	2.7
205+50.0	12.6	-	205+59.4	8.8	11.2
205+59.4	8.8	-	205+62.3	0.0	1.4
BRIDGE OMISSION					
206+21.1	3.6	-	206+50.0	17.3	33.5
206+50.0	17.3	-	207+00.0	7.4	68.6
207+00.0	7.4	-	207+33.0	6.8	26.1
207+33.0	6.8	-	207+40.8	0.0	2.9
RIGHT SIDE					
203+86.6	0.0	-	204+00.0	7.7	5.7
204+00.0	7.7	-	204+50.0	11.9	54.4
204+50.0	11.9	-	205+00.0	14.3	72.7
205+00.0	14.3	-	205+48.1	9.7	64.3
205+48.1	8.7	-	205+50.0	8.5	1.8
205+50.0	8.5	-	205+72.4	3.6	15.1
BRIDGE OMISSION					
206+22.4	3.5	-	207+50.0	3.5	49.6
207+50.0	3.5	-	207+56.3	3.5	2.5
207+56.3	3.5	-	207+94.5	0.0	7.4
				TOTAL =	657

25000210 SEEDING, CLASS 2A

STATION	WIDTH(FT)	-	STATION	WIDTH(FT)	ACRE
REFER TO "21101615 TOPSOIL F & P 4" FOR QUANTITY					0.136
				TOTAL =	0.14

25100630 EROSION CONTROL BLANKET

STATION	WIDTH(FT)	-	STATION	WIDTH(FT)	SQ YD
REFER TO "21101615 TOPSOIL F & P 4" FOR QUANTITY					657.0
				TOTAL =	657

28000400 PERIMETER EROSION BARRIER

STATION	OFFSET(FT)	-	STATION	OFFSET(FT)	FOOT
LEFT SIDE					
203+28.3	22.3 LT	-	203+35.9	23.9 LT	7.7
203+35.9	23.9 LT	-	204+00.0	27.5 LT	64.2
204+00.0	27.5 LT	-	204+50.0	27.3 LT	50.0
204+50.0	27.3 LT	-	205+00.0	30.4 LT	50.1
205+00.0	30.4 LT	-	205+50.0	32.6 LT	50.0
205+50.0	32.6 LT	-	205+59.4	28.8 LT	10.1
205+59.4	28.8 LT	-	205+62.3	19.9 LT	9.4
BRIDGE OMISSION					
206+21.1	20.2 LT	-	206+21.2	23.8 LT	3.6
206+21.2	23.8 LT	-	206+50.0	31.9 LT	29.9
206+50.0	31.9 LT	-	207+00.0	18.8 LT	51.7
RIGHT SIDE					
203+86.6	20.9 RT	-	204+00.0	28.4 RT	15.4
204+00.0	28.4 RT	-	204+50.0	30.7 RT	50.1
204+50.0	30.7 RT	-	205+00.0	33.1 RT	50.1
205+00.0	33.1 RT	-	205+50.0	28.5 RT	50.2
205+50.0	28.5 RT	-	205+72.4	23.6 RT	23.0
205+72.4	23.6 RT	-	205+72.4	20.0 RT	3.6
BRIDGE OMISSION					
206+22.5	19.8 RT	-	206+22.4	23.3 RT	3.5
206+22.4	23.3 RT	-	206+50.0	23.2 RT	27.6
206+50.0	23.2 RT	-	206+93.0	29.6 RT	43.4
				TOTAL =	594

28000510 INLET FILTERS

STATION	OFFSET(FT)	EACH
203+75.7	23.0 RT	1.0
204+02.0	14.0 RT	1.0
	TOTAL =	2

31101200 SUBBASE GRANULAR MATERIAL, TYPE B 4"

STATION	WIDTH(FT)	-	STATION	WIDTH(FT)	SQ YD
UNDER SIDEWALK					
205+33.1	5.5	-	205+48.1	5.5	9.2
206+47.9	5.5	-	206+61.1	6.5	8.8
UNDER COMBINATION CONCRETE CURB AND GUTTER, TYPE B6.24					
205+48.1	3.6	-	205+71.4	3.6	9.3
205+33.1	3.6	-	205+71.4	3.6	15.3
BRIDGE OMISSION					
206+22.8	3.6	-	206+61.1	3.6	15.3
206+22.8	3.6	-	206+61.1	3.6	15.3
				TOTAL =	73

40600635 LEVELING BINDER (MACHINE METHOD), N70

STATION	WIDTH(FT)	-	STATION	WIDTH(FT)	TON
RATE =	112.0	POUND / SQ YD / INCH			
DEPTH =	0.75	INCH			
205+33.1	24.0	-	205+71.4	24.0	4.3
206+22.8	24.0	-	206+61.1	24.0	4.3
				TOTAL =	9

40600982 HOT-MIX ASPHALT SURFACE REMOVAL - BUTT JOINT

STATION	WIDTH(FT)	-	STATION	WIDTH(FT)	SQ YD
205+33.1	24.0	-	205+37.6	24.0	12.0
206+56.6	24.0	-	206+61.1	24.0	12.0
				TOTAL =	24

40603340 HOT-MIX ASPHALT SURFACE COURSE, MIX "D", N70

STATION	WIDTH(FT)	-	STATION	WIDTH(FT)	TON
RATE =	112.0	POUND / SQ YD / INCH			
DEPTH =	1.5	INCH			
205+33.1	24.0	-	205+71.4	24.0	8.6
206+22.8	24.0	-	206+61.1	24.0	8.6
				TOTAL =	17

42400200 PORTLAND CEMENT CONCRETE SIDEWALK 5 INCH

STATION	WIDTH(FT)	-	STATION	WIDTH(FT)	SQ FT
205+33.1	4.5	-	205+48.1	4.5	67.5
206+47.9	4.5	-	206+61.1	5.5	66.1
				TOTAL =	134

44000500 COMBINATION CURB AND GUTTER REMOVAL

STATION	OFFSET(FT)	-	STATION	OFFSET(FT)	FOOT
205+48.0	14.7 LT	-	205+73.0	14.6 LT	25.0
205+33.1	15.0 RT	-	205+73.0	14.5 RT	39.9
BRIDGE OMISSION					
206+21.0	14.8 LT	-	206+61.1	14.3 LT	40.1
206+21.0	14.3 RT	-	206+61.1	14.9 RT	40.1
				TOTAL =	145

44000600 SIDEWALK REMOVAL

STATION	WIDTH(FT)	-	STATION	WIDTH(FT)	SQ FT
WEST SIDE					
205+48.0	4.5	-	205+73.0	4.5	112.5
206+20.0	4.5	-	206+44.0	4.5	108.0
EAST SIDE					
205+33.0	4.5	-	205+73.0	4.5	180.0
206+22.0	4.5	-	206+61.0	5.5	195.0
				TOTAL =	596

48101498 AGGREGATE SHOULDERS, TYPE B 4"

STATION	WIDTH(FT)	-	STATION	WIDTH(FT)	SQ YD
205+33.1	3.6	-	205+48.1	2.3	4.9
				TOTAL =	5

FILE NAME = g:\projects\2102155.010\cadd\civil\sht\0111664-95sht-schedule.dgn

ENTRAN	USER NAME = 2PIENID	DESIGNED - DJB	REVISED -
		DRAWN - ENTRAN	REVISED -
	PLOT SCALE = 50.00 ' / IN.	CHECKED - TMH	REVISED -
	PLOT DATE = 8/31/2011	DATE - 08/02/11	REVISED -

STATE OF ILLINOIS
DEPARTMENT OF TRANSPORTATION

SHERMER ROAD OVER MIDDLE FORK NORTH BRANCH CHICAGO RIVER
SCHEDULE OF QUANTITIES

SCALE: 50.00 ' / IN. | SHEET NO. OF SHEETS | STA. TO STA.

F.A.U. RTE.	SECTION	COUNTY	TOTAL SHEETS	SHEET NO.
2760	100-B-1	COOK	28	5
		CONTRACT NO. 60M80		

FED. ROAD DIST. NO. 1 | ILLINOIS | FED. AID PROJECT

SCHEDULE OF QUANTITIES

60605000 COMBINATION CONCRETE CURB AND GUTTER, TYPE B-6.24

STATION	OFFSET(FT)	-	STATION	OFFSET(FT)	FOOT
205+48.1	14.6 LT	-	205+71.4	14.6 LT	23.3
205+33.1	14.6 RT	-	205+71.4	14.6 RT	38.3
BRIDGE OMISSION					
206+22.8	14.6 LT	-	206+61.1	14.6 LT	38.3
206+22.8	14.6 RT	-	206+61.1	14.6 RT	38.3
				TOTAL =	138

63000001 STEEL PLATE BEAM GUARDRAIL, TYPE A, 6 FOOT POSTS

STATION	OFFSET(FT)	-	STATION	OFFSET(FT)	FOOT
203+99.1	20.0 LT	-	205+04.1	20.0 LT	100.0
204+56.9	20.0 RT	-	205+04.7	20.0 RT	50.0
				TOTAL =	150

63100045 TRAFFIC BARRIER TERMINAL, TYPE 2

STATION	OFFSET(FT)	EACH
SHERMER RD		
207+07.0	30.5 RT	1.0
	TOTAL =	1

63100085 TRAFFIC BARRIER TERMINAL, TYPE 6

STATION	OFFSET(FT)	EACH
205+48.1	19.0 RT	1.0
205+48.1	19.0 LT	1.0
206+48.5	19.0 RT	1.0
206+44.3	19.0 LT	1.0
	TOTAL =	4

63100167 TRAFFIC BARRIER TERMINAL, TYPE 1 (SPECIAL) TANGENT

STATION	OFFSET(FT)	EACH
203+46.6	21.0 LT	1.0
204+09.2	21.0 RT	1.0
207+34.3	13.0 LT	1.0
	TOTAL =	3

63200310 GUARDRAIL REMOVAL

STATION	OFFSET(FT)	-	STATION	OFFSET(FT)	FOOT
204+67.7	21.2 LT	-	205+47.3	19.4 LT	79.7
204+24.6	21.2 RT	-	205+48.1	19.0 RT	123.5
206+44.3	19.2 LT	-	207+31.7	17.9 LT	87.4
206+48.4	18.7 RT	-	207+29.6	38.1 RT	83.5
				TOTAL =	374

66700205 PERMANENT SURVEY MARKERS, TYPE I

STATION	OFFSET(FT)	EACH
SHERMER RD		
206+16.0	16.0 RT	1.0
	TOTAL =	1

78008210 POLYUREA PAVEMENT MARKING TYPE I - LINE 4"

STATION	OFFSET(FT)	-	STATION	OFFSET(FT)	FOOT
YELLOW					
205+33.1	0.4 LT	-	205+71.4	0.4 LT	38.3
205+33.1	0.4 RT	-	205+71.4	0.4 RT	38.3
205+71.4	0.4 LT	-	206+22.8	0.4 LT	51.4
205+71.4	0.4 RT	-	206+22.8	0.4 RT	51.4
206+22.8	0.4 LT	-	206+61.1	0.4 LT	38.4
206+22.8	0.4 RT	-	206+61.1	0.4 RT	38.4
WHITE					
205+33.1	12.0 LT	-	205+71.4	12.0 LT	38.3
205+33.1	12.0 RT	-	205+71.4	12.0 RT	38.3
205+71.4	12.0 LT	-	206+22.8	12.0 LT	51.4
205+71.4	12.0 RT	-	206+22.8	12.0 RT	51.4
206+22.8	12.0 LT	-	206+61.1	12.0 LT	38.3
206+22.8	12.0 RT	-	206+61.1	12.0 RT	38.4
				TOTAL =	512

78100100 RAISED REFLECTIVE PAVEMENT MARKER

STATION	OFFSET(FT)	EACH
TWO-WAY AMBER MARKER		
205+35.0	0.0 RT	2.0
206+55.0	0.0 RT	2.0
	TOTAL =	4

78100105 RAISED REFLECTIVE PAVEMENT MARKER (BRIDGE)

STATION	OFFSET(FT)	EACH
TWO-WAY AMBER MARKER		
205+75.0	0.0 RT	2.0
206+15.0	0.0 RT	2.0
	TOTAL =	4

78300200 RAISED REFLECTIVE PAVEMENT MARKER REMOVAL

STATION	OFFSET(FT)	EACH
REFER TO "78100100 RAISED REFL PAVT MKR" FOR QTY		4.0
REFER TO "78100105 RAISED REF PVT MKR BR" FOR QTY		4.0
	TOTAL =	8

X4401198 HOT-MIX ASPHALT SURFACE REMOVAL, VARIABLE DEPTH

STATION	WIDTH(FT)	-	STATION	WIDTH(FT)	SQ YD
205+37.6	24.0	-	205+71.4	24.0	90.2
206+22.8	24.0	-	206+56.6	24.0	90.2
				TOTAL =	180

X7240600 REMOVE AND RE-ERECT EXISTING SIGN

STATION	OFFSET(FT)	EACH
204+64.3	22.2 LT	1.0
205+43.4	23.4 LT	1.0
206+90.8	19.8 LT	1.0
	TOTAL =	3

FILE NAME = G:\projects\2002155.010\CADD\Civil\Sht\0116564-05sht-schedule.dgn

ENTRAN	USER NAME = 2pierad	DESIGNED - DJB	REVISED -
		DRAWN - ENTRAN	REVISED -
	PLOT SCALE = 50.00 ' / IN.	CHECKED - TMH	REVISED -
	PLOT DATE = 10/7/2011	DATE - 08/02/11	REVISED -

STATE OF ILLINOIS
DEPARTMENT OF TRANSPORTATION

SHERMER ROAD OVER MIDDLE FORK NORTH BRANCH CHICAGO RIVER
SCHEDULE OF QUANTITIES

SCALE: 50.00 ' / IN. | SHEET NO. OF SHEETS | STA. TO STA.

F.A.U. RTE.	SECTION	COUNTY	TOTAL SHEETS	SHEET NO.
2760	100-B-1	COOK	28	6
		CONTRACT NO. 60M80		

FED. ROAD DIST. NO. 1 | ILLINOIS | FED. AID PROJECT

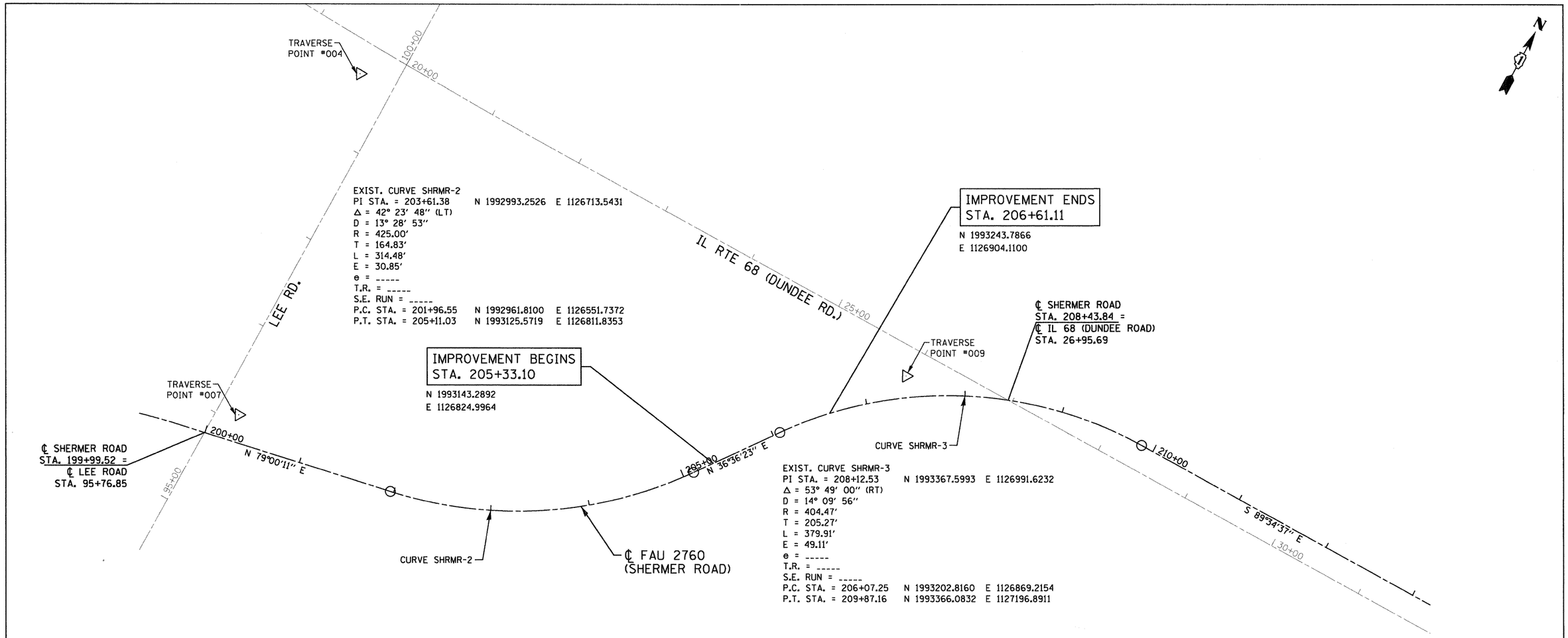

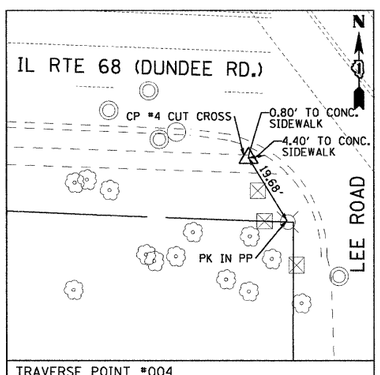

TRAVERSE POINT #004
N 1993316.60
E 1126323.64
STA 200+40.17, OFFSET 391.81' LT

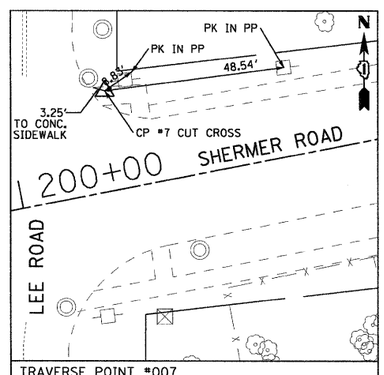

TRAVERSE POINT #007
N 1992956.56
E 1126380.25
STA 200+27.21, OFFSET 27.54' LT

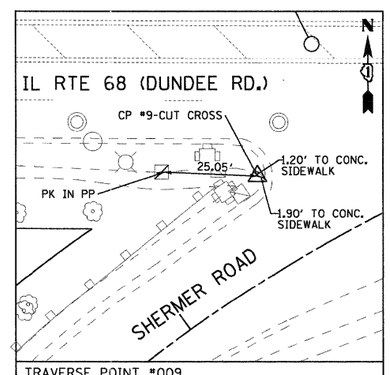

TRAVERSE POINT #009
N 1993307.17
E 1126958.39
STA 207+42.23, OFFSET 13.68' LT

TRAVERSE CONTROL POINTS
NOT TO SCALE

BENCHMARK

BM-"A" SPIKE SET IN THE NORTH FACE OF POWER POLE 150' EAST OF BITTERSWEET DRIVE ON S. SIDE OF IL 68 (DUNDEE ROAD) ELEV=651.57

BM-"C" SOUTHEAST BOLT IN TOP RIM OF FIRE HYDRANT, 200' SOUTH OF SHERMER ROAD ELEV=656.78

BM-"E" SPIKE FOUND IN SOUTH FACE OF POWER POLE AT SOUTHWEST CORNER OF IL 68 AND SHERMER ROAD. ELEV=647.74

NOTE:

VERTICAL AND HORIZONTAL CONTROL
NAVD 1988 DATUM PER GPS VRS NETWORK

FILE NAME = g:\project\2102155.010\cadd\civil\sht\D111664-06sht-ATB.dgn

ENTRAN	USER NAME = 2PIENID	DESIGNED - DJB	REVISED -	STATE OF ILLINOIS DEPARTMENT OF TRANSPORTATION	SHERMER ROAD OVER MIDDLE FORK NORTH BRANCH CHICAGO RIVER ALIGNMENT, TIES & BENCHMARKS	F.A.U. RTE. 2760	SECTION 100-B-1	COUNTY COOK	TOTAL SHEETS 28	SHEET NO. 7
		DRAWN - ENTRAN	REVISED -					CONTRACT NO. 60M80		
	PLOT SCALE = 50.00 ' / IN.	CHECKED - TMH	REVISED -							
	PLOT DATE = 8/31/2011	DATE - 08/02/11	REVISED -		SCALE: 50.00 ' / IN. SHEET NO. OF SHEETS STA. TO STA.	FED. ROAD DIST. NO. 1	ILLINOIS	FED. AID PROJECT		

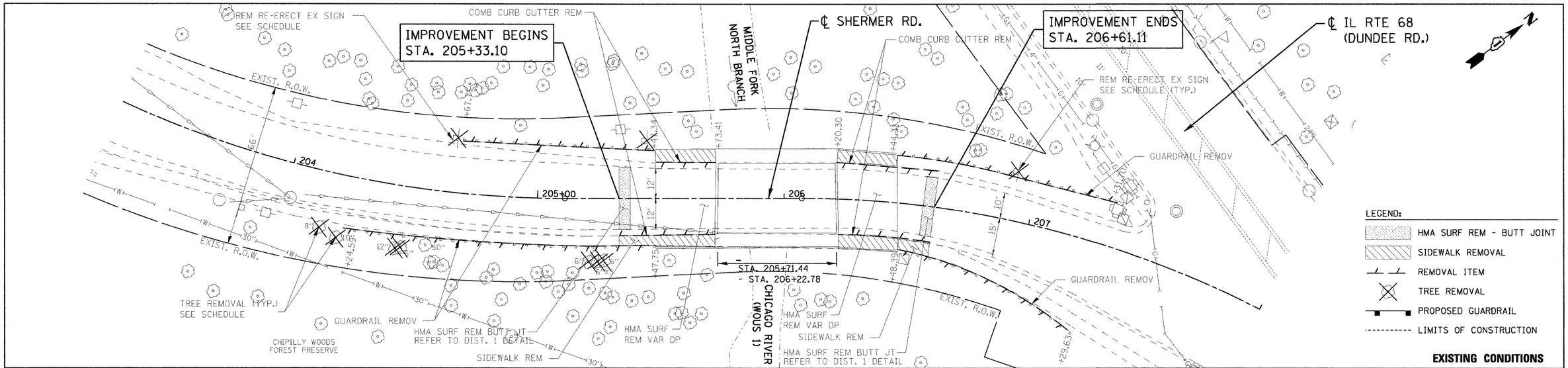

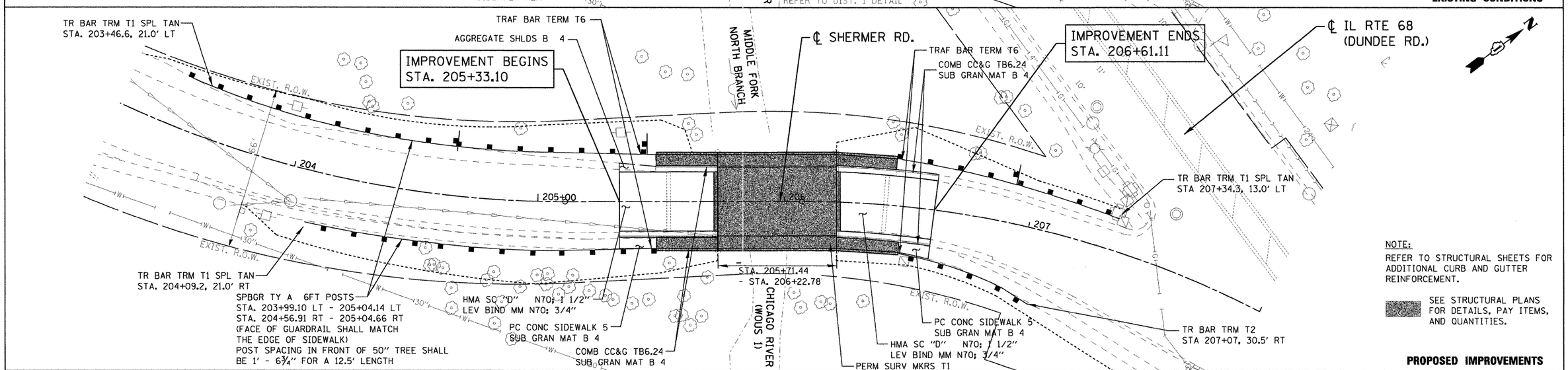

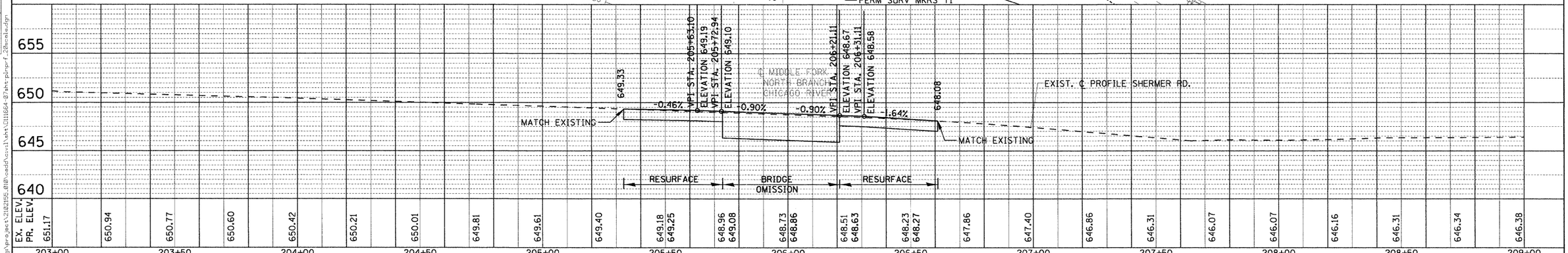

ENTRAN	USER NAME = 2PIENID	DESIGNED - DJB	REVISED -
		DRAWN - ENTRAN	REVISED -
	PLOT SCALE = 20.00 ' / IN.	CHECKED - TMH	REVISED -
	PLOT DATE = 8/31/2011	DATE - 08/02/11	REVISED -

STATE OF ILLINOIS
DEPARTMENT OF TRANSPORTATION

SHERMER ROAD OVER MIDDLE FORK NORTH BRANCH CHICAGO RIVER
EXISTING AND PROPOSED PLAN AND PROFILE

SCALE: 1" = 50' | SHEET NO. OF SHEETS | STA. TO STA.

F.A.P. RTE.	SECTION	COUNTY	TOTAL SHEETS	SHEET NO.
2760	100-B-1	COOK	28	8
FAU ROUTE 2760		CONTRACT NO.60M80		
FED. ROAD DIST. NO.	ILLINOIS	FED. AID PROJECT		

PLAN: SURVEYED | PLOTTED | PROJECT CHECKED | R/W CHECKED | NOTE BOOK | NO. | P400 FILE NAME | BY | DATE

PROFILE: SURVEYED | PLOTTED | PROJECT CHECKED | BM. NOTED | STRUCTURE NOTATIONS CHKD | NOTE BOOK | NO. | BY | DATE

FILE NAME = g:\Project\2102150_010\cadd\civil\sht\011664-07sht-plrpr-f_20scale.dgn

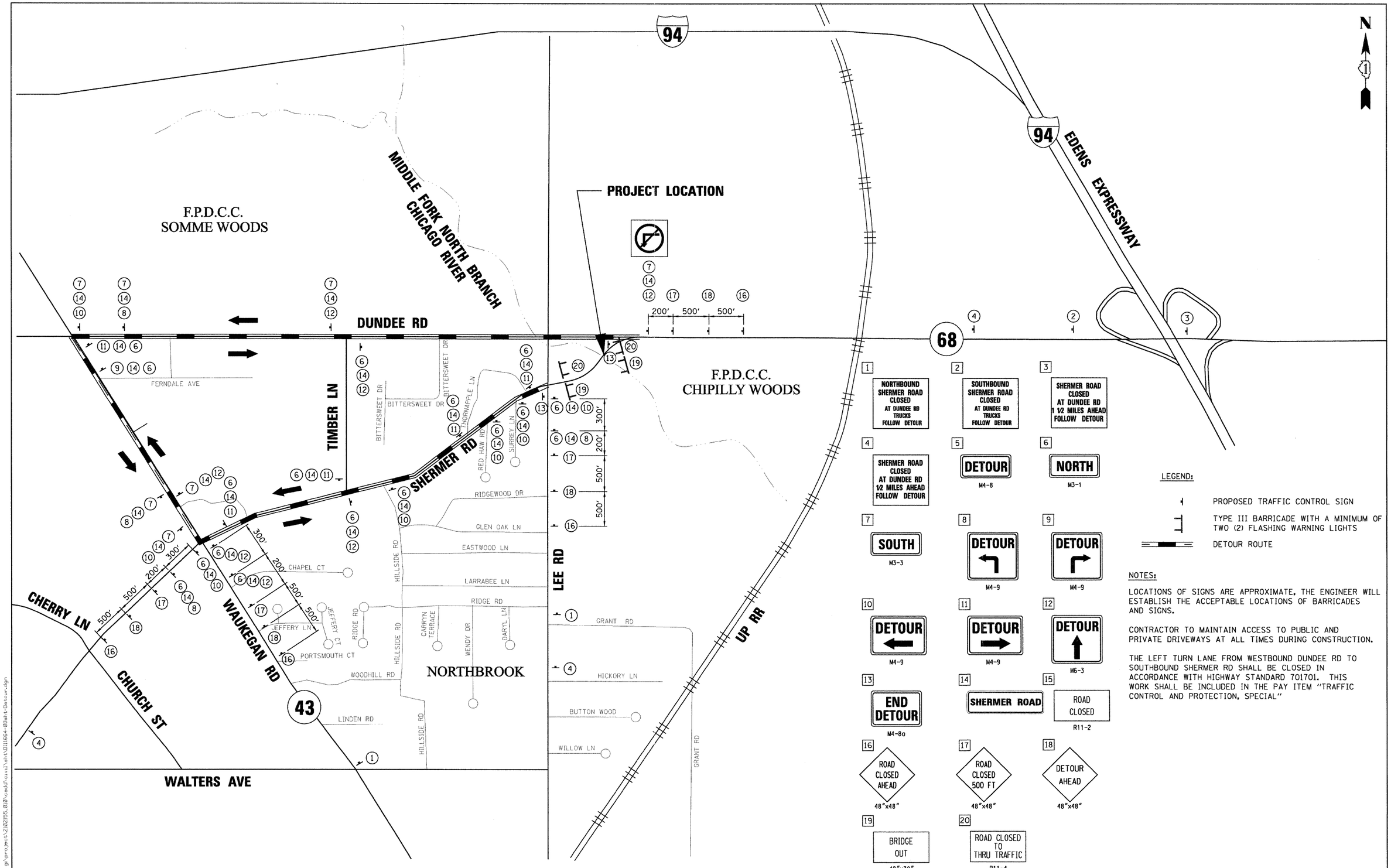

1 NORTHBOUND SHERMER ROAD CLOSED AT DUNDEE RD TRUCKS FOLLOW DETOUR

2 SOUTHBOUND SHERMER ROAD CLOSED AT DUNDEE RD TRUCKS FOLLOW DETOUR

3 SHERMER ROAD CLOSED AT DUNDEE RD 1 1/2 MILES AHEAD FOLLOW DETOUR

4 SHERMER ROAD CLOSED AT DUNDEE RD 1/2 MILES AHEAD FOLLOW DETOUR

5 DETOUR M4-8

6 NORTH M3-1

7 SOUTH M3-3

8 DETOUR M4-9

9 DETOUR M4-9

10 DETOUR M4-9

11 DETOUR M4-9

12 DETOUR M6-3

13 END DETOUR M4-8a

14 SHERMER ROAD

15 ROAD CLOSED R11-2

16 ROAD CLOSED AHEAD 48"x48"

17 ROAD CLOSED 500 FT 48"x48"

18 DETOUR AHEAD 48"x48"

19 BRIDGE OUT 48"x30"

20 ROAD CLOSED TO THRU TRAFFIC R11-4

LEGEND:

PROPOSED TRAFFIC CONTROL SIGN

TYPE III BARRICADE WITH A MINIMUM OF TWO (2) FLASHING WARNING LIGHTS

DETOUR ROUTE

NOTES:

LOCATIONS OF SIGNS ARE APPROXIMATE. THE ENGINEER WILL ESTABLISH THE ACCEPTABLE LOCATIONS OF BARRICADES AND SIGNS.

CONTRACTOR TO MAINTAIN ACCESS TO PUBLIC AND PRIVATE DRIVEWAYS AT ALL TIMES DURING CONSTRUCTION.

THE LEFT TURN LANE FROM WESTBOUND DUNDEE RD TO SOUTHBOUND SHERMER RD SHALL BE CLOSED IN ACCORDANCE WITH HIGHWAY STANDARD 701701. THIS WORK SHALL BE INCLUDED IN THE PAY ITEM "TRAFFIC CONTROL AND PROTECTION, SPECIAL"

FILE NAME = g:\project\2102195.010\cadd\civil\sht\011664-09sht-Detour.dgn

USER NAME = 2PIENID	DESIGNED - DJB	REVISED -	
	DRAWN - ENTRAN	REVISED -	
PLOT SCALE = 50.0000 ' / IN.	CHECKED - TMH	REVISED -	
PLOT DATE = 8/31/2011	DATE - 08/02/11	REVISED -	

STATE OF ILLINOIS
DEPARTMENT OF TRANSPORTATION

SHERMER ROAD OVER MIDDLE FORK NORTH BRANCH CHICAGO RIVER
DETOUR ROUTE

SCALE: 50.0000 ' / IN. SHEET NO. OF SHEETS STA. TO STA.

F.A.U. RTE.	SECTION	COUNTY	TOTAL SHEETS	SHEET NO.
2760	100-B-1	COOK	28	9
		CONTRACT NO. 60M80		

FED. ROAD DIST. NO. 1 | ILLINOIS | FED. AID PROJECT

PROPOSED PREEMPTION SEQUENCE

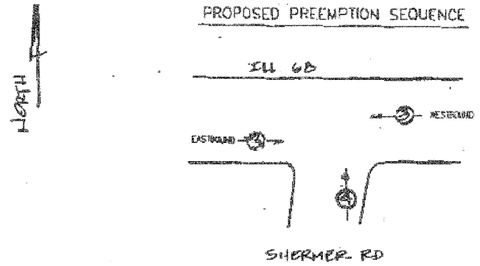

PROPOSED EMERGENCY VEHICLE PREEMPTORS						
EMERGENCY VEHICLE PREEMPTOR	1	2	3	4	5	6
MOVEMENT	NOT USED	NOT USED	← →	↑	NOT USED	NOT USED

N

NOTES:

1. The WB left-turn lane on Ill. 68 shall be closed and barricaded to *restrict the left-turn* left-turn movement during bridge construction.
2. WB Ill. 68 mast *arm mounted left-turn signal* "Y" & "G" arrow sections shall be disconnected and bagged during construction.
3. WB Ill. 68 far-left post mounted signal "Y" & "G" arrow sections shall be disconnected and bagged during construction.
4. NB Shermer Rd. near right signal, post mounted shall be disconnected and bagged.
5. NB Shermer Rd. *far signals*, each post mounted shall be disconnected and bagged.
6. NB Shermer Rd. EVP detector and beacon shall be disconnected.

Prior to any signal disconnection the *D-1 traffic signal operations* engineer shall be notified 72 hrs in advance, call 847-705-4424.

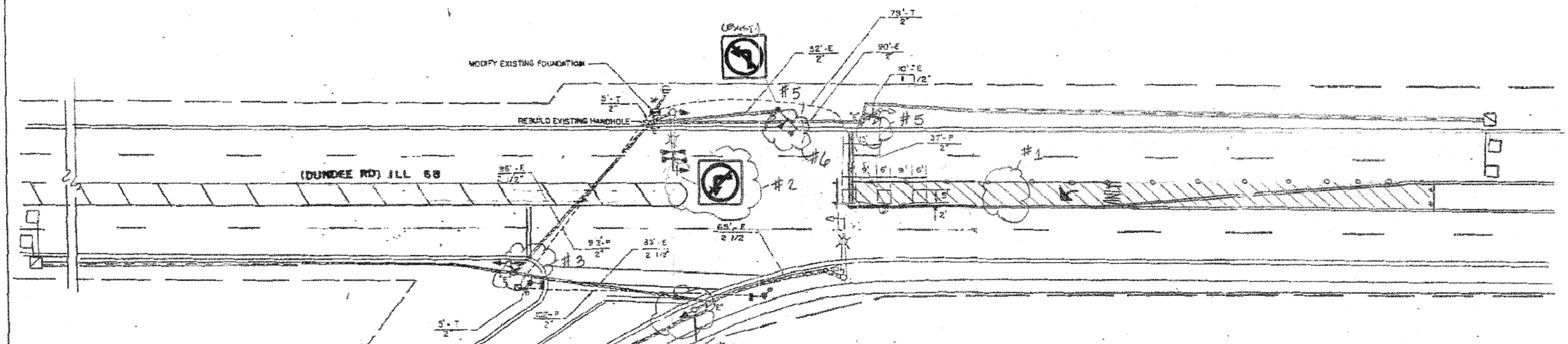

NOTE: LOOP DETECTORS HERE AND FOR THE WB LEFT-TURN LANE AS WELL AS EACH SIGNAL HEAD SHALL BE DISCONNECTED AT THE CONTROLLER.

EXISTING CONTROLLER SEQUENCE

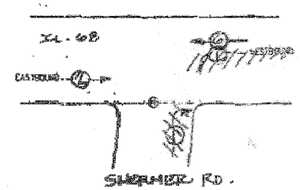

LEGEND

THROUGH MOVEMENT OVERLAP PHASE DESIGNATIONS

OVERLAP LETTER	TURNING MOVEMENT PHASE	THROUGH MOVEMENT PHASE
A	1	2

CABLE PLAN

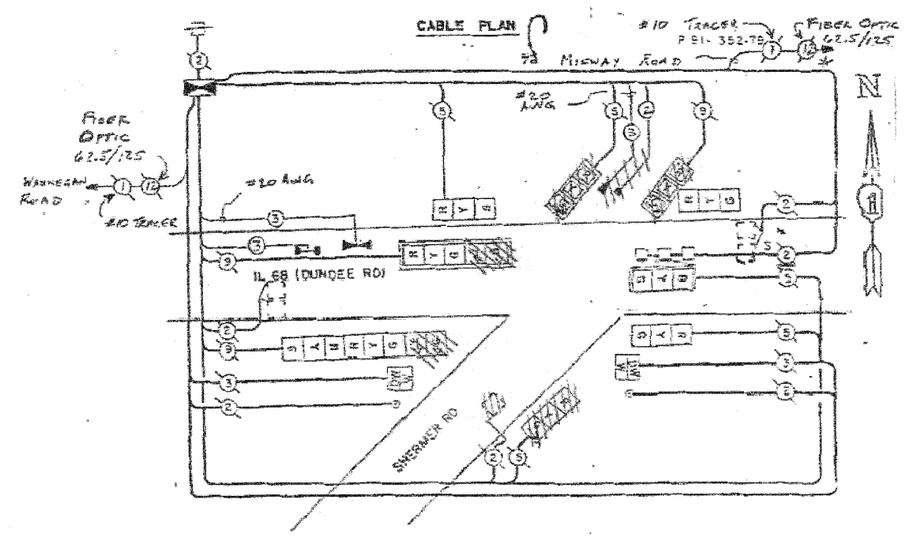

TEMPORARY TRAFFIC SIGNAL PLAN

FILE NAME =	USER NAME =	DESIGNED -	REVISED -	STATE OF ILLINOIS DEPARTMENT OF TRANSPORTATION	TRAFFIC SIGNAL INSTALLATION PLAN ILL. ROUTE 68 @ SHERMER RD.	F.A.U. RTE.	SECTION	COUNTY	TOTAL SHEETS	SHEET NO.
		DRAWN -	REVISED -			2760	100-B-1	LAKE	28	9A
	PLOT SCALE =	CHECKED -	REVISED -					CONTRACT NO. 60M80		
	PLOT DATE =	DATE -	REVISED -		SCALE: SHEET NO. OF SHEETS STA. TO STA.	FED. ROAD DIST. NO.	ILLINOIS FED. AID PROJECT			

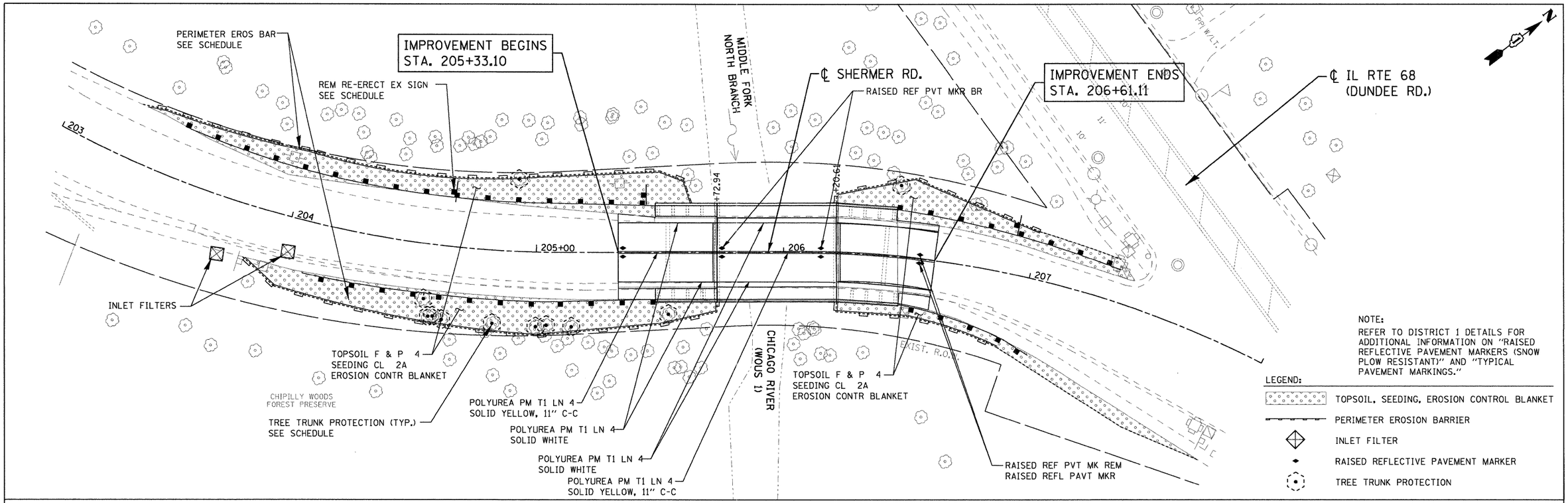

FILE NAME = G:\project\2102155.010\CADD\Civil\Sht\0111664-09sht-pmk.dgn

ENTRAN	USER NAME = 2pierid	DESIGNED - DJB	REVISED -	STATE OF ILLINOIS DEPARTMENT OF TRANSPORTATION	SHERMER ROAD OVER MIDDLE FORK NORTH BRANCH CHICAGO RIVER PAVEMENT MARKING, EROSION CONTROL AND LANDSCAPING PLAN	F.A.U. RTE.	SECTION	COUNTY	TOTAL SHEETS	SHEET NO.
		DRAWN - ENTRAN	REVISED -			2760	100-B-1	COOK	28	10
	PLOT SCALE = 20.00 ' / IN.	CHECKED - TMH	REVISED -					CONTRACT NO. 60M80		
	PLOT DATE = 10/7/2011	DATE - 08/02/11	REVISED -		SCALE: 20.00 ' / IN. SHEET NO. OF SHEETS STA. TO STA.	FED. ROAD DIST. NO. 1	ILLINOIS	FED. AID PROJECT		

Benchmark - Spike found in south face of power pole at southwest corner of Illinois Rte. 68 and Shermer Road. Elev = 647.74.

Existing Structure - S.N. 016-0814 originally built in 1959 as S.A. Route 106, Sec. 106-0203-MFT. The existing structure consists of a single span of 27"x36" PPC deck beams with closed abutments supported on 12" diameter timber piles. The back to back of abutments measures 50'-0" and the out to out of deck is 40'-0". In 1979, the original HMA overlay was removed and replaced with a variable thickness reinforced concrete wearing surface. In 2002, the concrete wearing surface was removed and replaced. The superstructure is to be removed and replaced. Traffic is to be detoured.

No salvage.

Scope of Work

1. Remove and replace PPC deck beam superstructure
2. Construct concrete wearing surface
3. Perform substructure repairs
4. Remove and replace HMA overlay on approach slabs
5. Remove and replace approach sidewalks and guardrail

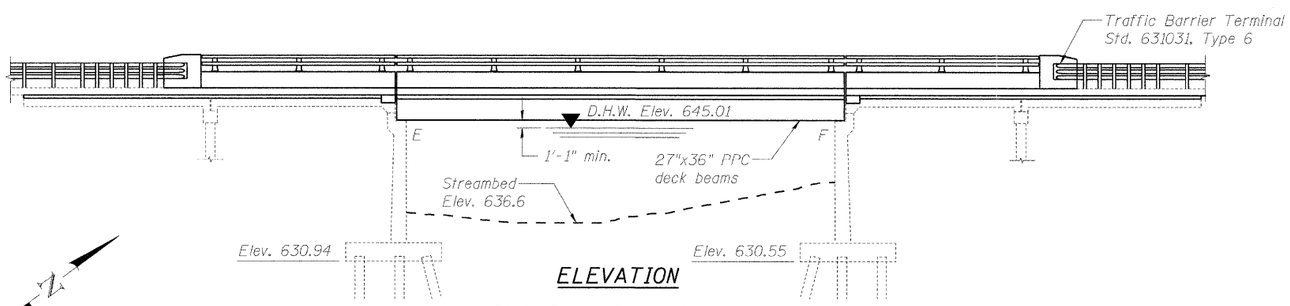

ELEVATION

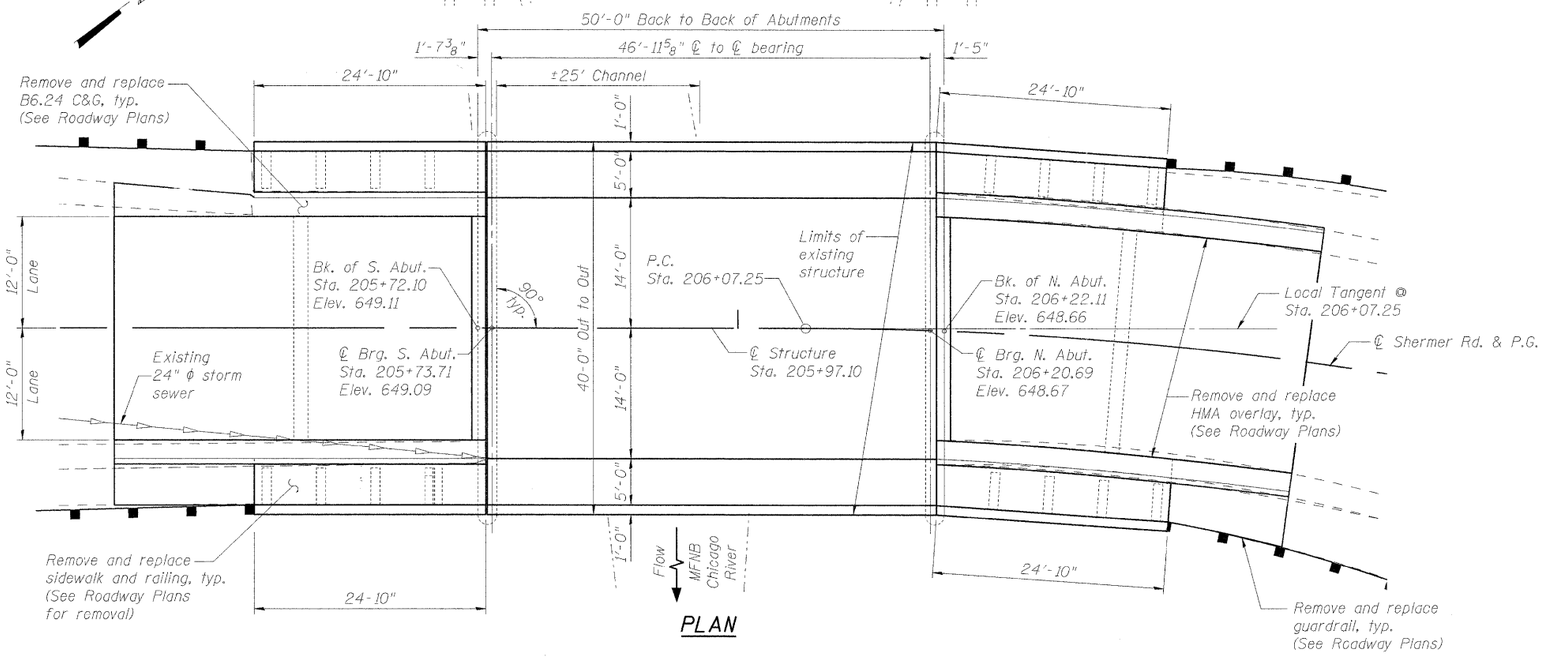

PLAN

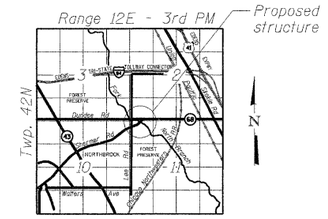

LOCATION SKETCH

DESIGN SPECIFICATIONS

(New Construction)

AASHTO LRFD Bridge Design Specifications, 5th Edition, with 2010 Interim Revisions

LOADING HL-93

Allow 50#/sq. ft. for future wearing surface.

DESIGN STRESSES

FIELD UNITS (New Construction)

f'c = 3,500 psi
fy = 60,000 psi (Reinforcement)

FIELD UNITS (Existing Construction)

f'c = 3,000 psi
fy = 40,000 psi (Reinforcement)

PRECAST PRESTRESSED UNITS

f'_c = 6,000 psi
f'_{ci} = 5,000 psi
f_{pu} = 270,000 psi (½" ϕ low relax. strands)
f_{pbt} = 201,960 psi (½" ϕ low relax. strands)

SEISMIC DATA

(Existing Construction)

Seismic Performance Zone (SPC) = A
Bedrock Acceleration Coefficient (A) = 0.04g
Site Coefficient (S) = 1.0

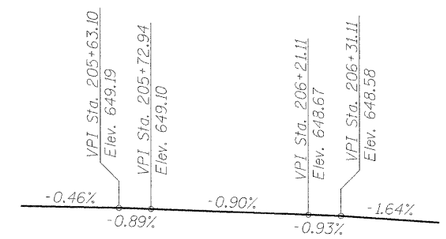

PROFILE GRADE

(Along ℄ Shermer Rd.)

APPROVED
FOR STRUCTURAL ADEQUACY ONLY
ENGINEER OF BRIDGES AND STRUCTURES

LICENSED STRUCTURAL ENGINEER
BRAD H. SAYERS
081-006267
CHICAGO
ILLINOIS
STATE OF ILLINOIS

BRAD H. SAYERS, S.E.
IL. LIC. NO. 081-006267
EXP 11/30/12
DATE 10/12/11

WATERWAY INFORMATION

Drainage Area = 21.54 sq. mi. Low Grade Elev. 647.60 ft. @ Sta. 206+75

Flood	Freq. Yr.	Q C.F.S.	Opening Sq. Ft. Exist.	Opening Sq. Ft. Prop.	Nat. H.W.E.	Head - Ft. Exist.	Head - Ft. Prop.	Headwater El. Exist.	Headwater El. Prop.
	10	449.0	312.3	312.3	644.19	0.03	0.03	644.22	644.22
Design	50	734.0	331.4	331.4	645.01	0.08	0.08	645.09	645.09
Base	100	870.0	331.4	331.4	645.32	0.12	0.12	645.44	645.44
Max. Calc.	500	1743.0	331.4	331.4	646.34	0.34	0.34	646.68	646.68

DESIGN SCOUR ELEVATION TABLE

Design Scour Elevation (ft.)	S. Abut.	N. Abut.
	626.12	630.08

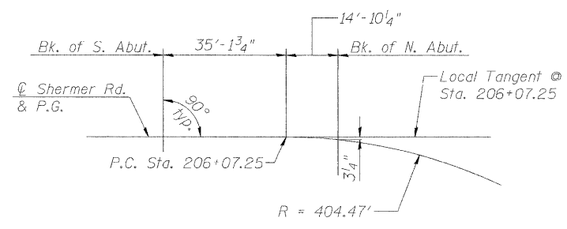

OFFSET SKETCH

CURVE DATA

Δ = 53° 49' 00" (RT)
D = 14° 09' 56"
T = 205.27'
L = 379.91'
E = 49.11'
R = 404.47'
S.E. = n/a
P.C. = Sta. 206+07.25
P.T. = Sta. 209+87.16
P.I. = Sta. 208+12.53

GENERAL PLAN & ELEVATION
SHERMER ROAD OVER MIDDLE FORK NORTH BRANCH CHICAGO RIVER
F.A.U. RTE. 2760 - SEC. 100-B-1
COOK COUNTY
STATION 205+97.10
STRUCTURE NO. 016-0814

FILE NAME = g:\projects\2202155.010\cadd\structure\016SB14-60M80-001-GPE.dgn

ENTRAN

USER NAME = 2sayerb	DESIGNED - BPS	REVISED -	
	CHECKED - BHS	REVISED -	
PLOT SCALE = N/A	DRAWN - BPS	REVISED -	
PLOT DATE = 10/6/2011	CHECKED - GSP	REVISED -	

STATE OF ILLINOIS
DEPARTMENT OF TRANSPORTATION

GENERAL PLAN & ELEVATION
S.N. 016-0814
SHEET NO. S1 OF 14 SHEETS

F.A.U. RTE.	SECTION	COUNTY	TOTAL SHEETS	SHEET NO.
2760	100-B-1	COOK	28	11
		CONTRACT NO. 60M80		
		ILLINOIS FED. AID PROJECT		

INDEX OF SHEETS

S1. General Plan & Elevation
S2. General Notes
S3. Deck Plan
S4. Superstructure Details
S5. Approach Details (1 of 2)
S6. Approach Details (2 of 2)
S7. Preformed Joint Strip Seal
S8. Aluminum Railing, Type L
S9. Framing Plan
S10. 27" x 36" PPC Deck Beam
S11. 27" x 36" PPC Deck Beam Details
S12. Substructure Repair
S13. Existing Bridge Plans (1 of 2)
S14. Existing Bridge Plans (2 of 2)

STATION 205+97.10
REBUILT 20 BY
STATE OF ILLINOIS
F.A.U. RTE. 2760 SEC. 100-B-1
LOADING HL-93
STRUCTURE NO. 016-0814

NAME PLATE

See Std. 515001

Existing Name Plate shall be cleaned and relocated next to new Name Plate. Cost included with Name Plates.
See Sheet S1 for Name Plate location.

GENERAL NOTES

1. Reinforcement bars shall conform to the requirements of ASTM A 706 Gr 60. See Special Provisions.
2. Reinforcement bars designated (E) shall be epoxy coated.
3. Plan dimensions and details relative to existing plans are subject to nominal construction variations. The Contractor shall field verify existing dimensions and details affecting new construction and make necessary approved adjustments prior to construction or ordering of materials. Such variations shall not be cause for additional compensation for a change in scope of the work, however, the Contractor will be paid for the quantity actually furnished at the unit price bid for the work.
4. Slipforming of the parapets is not allowed.
5. The minimum thickness of the Concrete Overlay shall be 4 inches and varies as required to adjust for the new Cross Slope and Beam Camber.
6. If the Contractor's procedures for existing deck beam removal involves placement of heavy equipment on the existing deck beams, a detailed procedure shall be submitted to the Engineer for approval. The procedure shall include calculations, sealed by an Illinois Licensed Structural Engineer, verifying the structural adequacy of the beams for the proposed loads. Cost included with Removal of Existing Superstructures.
7. No in-stream work will be allowed.

TOTAL BILL OF MATERIAL

ITEM	UNIT	SUPER	SUB	TOTAL
Removal of Existing Superstructures	Each	1		1
Concrete Removal	Cu Yd		3.6	3.6
Bridge Rail Removal	Foot	196		196
Concrete Superstructure	Cu Yd	42.3		42.3
Bridge Deck Grooving	Sq Yd	139		139
Protective Coat	Sq Yd	320		320
Precast Prestressed Concrete Deck Beams (27" Depth)	Sq Ft	1877		1877
Reinforcement Bars, Epoxy Coated	Pound	8580		8580
Aluminum Railing, Type L	Foot	180		180
Name Plates	Each	1		1
Preformed Joint Strip Seal	Foot	40.5		40.5
Epoxy Crack Injection	Foot	60		60
Concrete Wearing Surface, 5"	Sq Yd	214		214
Asbestos Bearing Pad Removal	Each	28		28
Structural Repair of Concrete (Depth Equal to or Less Than 5 Inches)	Sq Ft		5	5

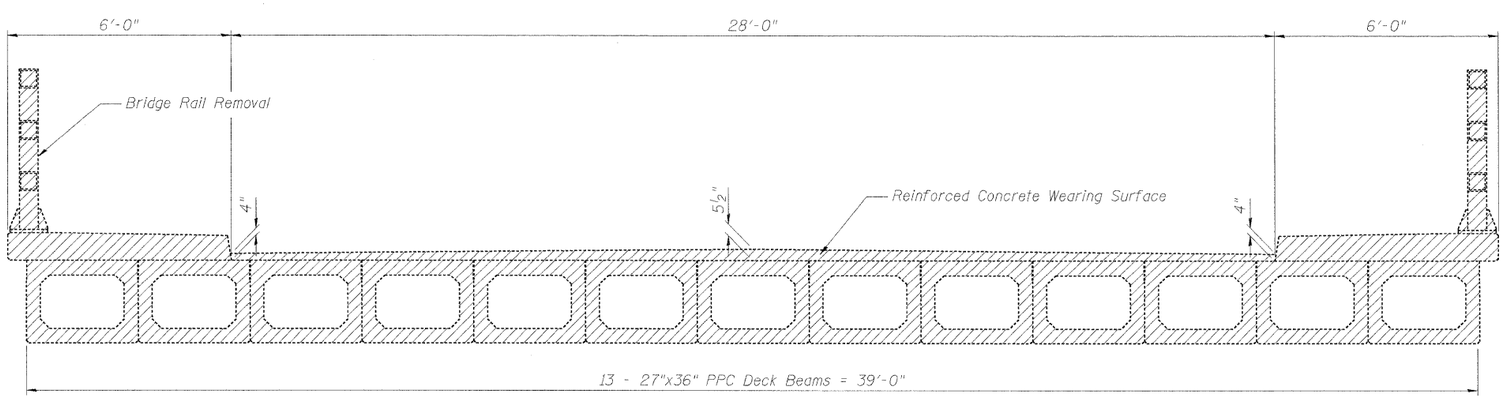

REMOVAL OF EXISTING SUPERSTRUCTURE

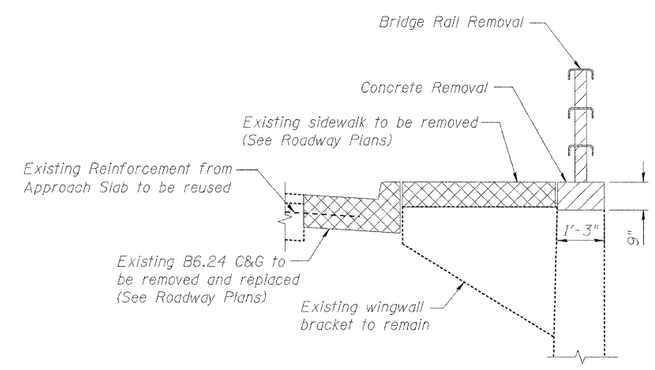

SIDEWALK REMOVAL AT APPROACHES

FILE NAME = g:\project\2102155_010\cadd\structure\0160814-60M80-002-General Notes.dgn

ENTRAN	USER NAME = 2sayerb	DESIGNED - BPS	REVISED -	STATE OF ILLINOIS DEPARTMENT OF TRANSPORTATION	GENERAL NOTES S.N. 016-0814	F.A.U. RTE. 2760	SECTION 100-B-1	COUNTY COOK	TOTAL SHEETS 28	SHEET NO. 12
		CHECKED - BHS	REVISED -					CONTRACT NO. 60M80		
	PLOT SCALE = N/A	DRAWN - BPS	REVISED -							
	PLOT DATE = 8/31/2011	CHECKED - GSP	REVISED -		SHEET NO. S2 OF 14 SHEETS		ILLINOIS FED. AID PROJECT			

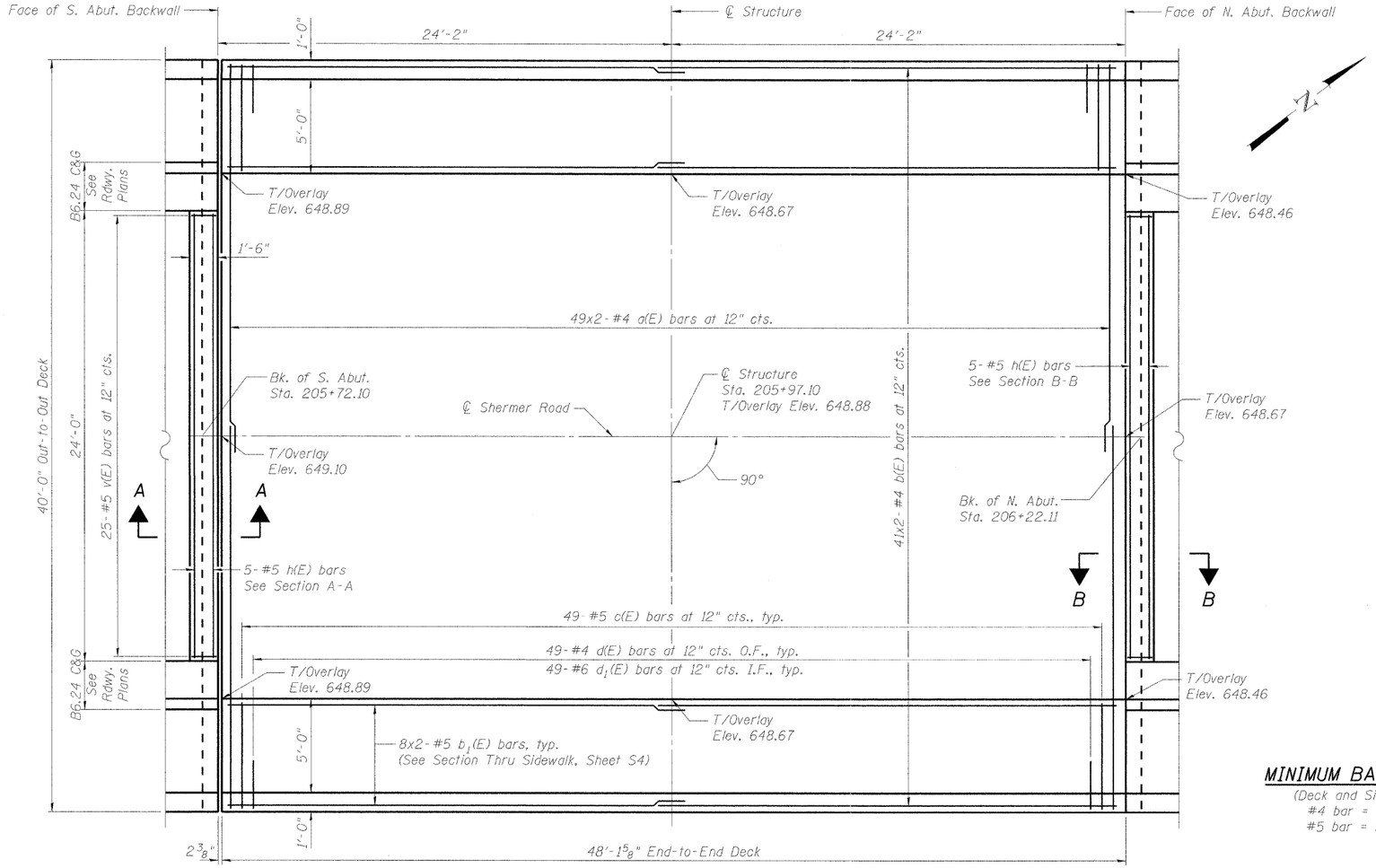

DECK PLAN

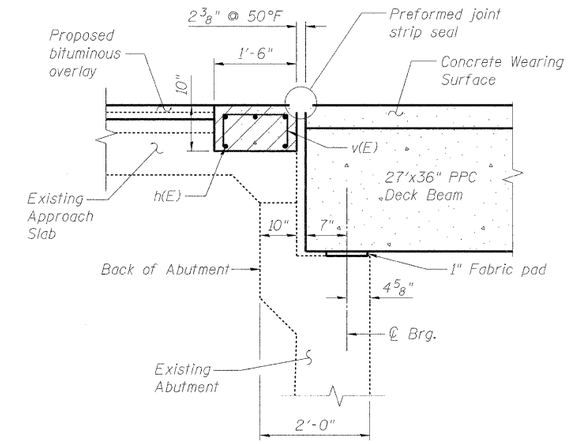

SECTION A-A

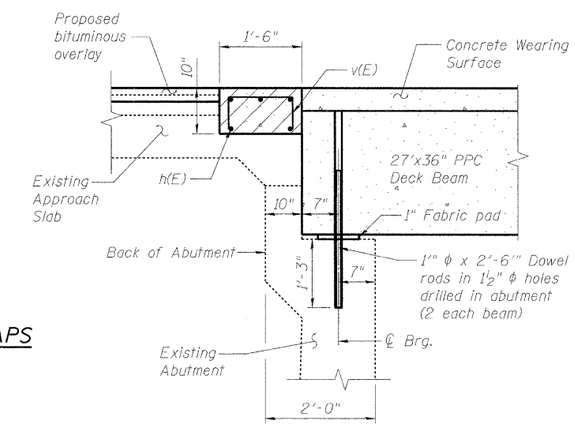

SECTION B-B

MINIMUM BAR LAPS

(Deck and Sidewalk)
#4 bar = 2'-1"
#5 bar = 2'-7"

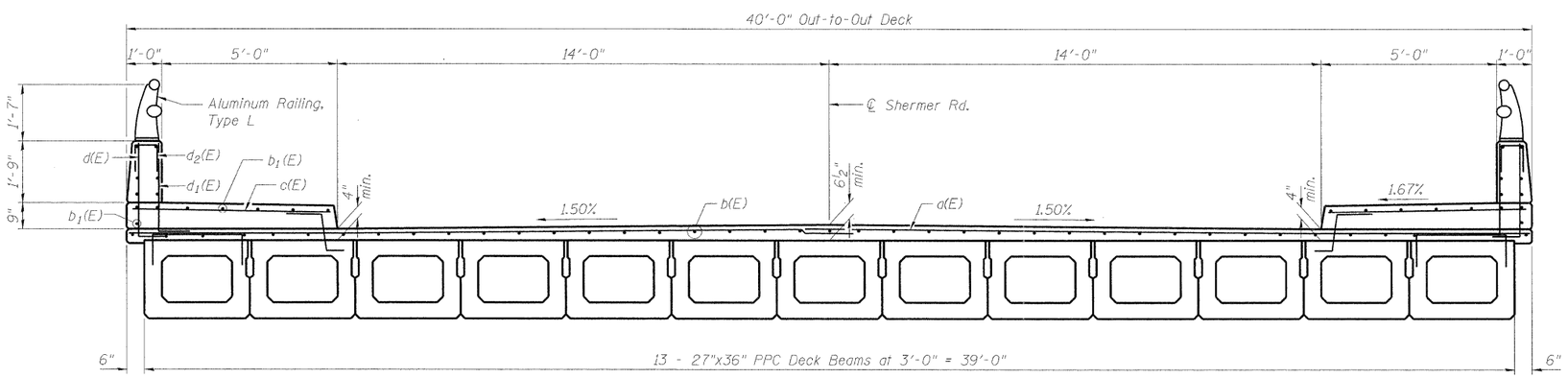

DECK CROSS SECTION

(Looking Upstation)

Notes:

Hatched area to be poured after concrete wearing surface is in place. Quantity of concrete included with Concrete Superstructure.

After beams have been erected, holes shall be drilled into substructure and anchor dowels placed. Dowel holes shall be filled with non-shrink grout to top of beam and allowed to cure min. 24 hrs. prior to grouting the shear keys.

See sheet S4 of 14 for superstructure details and Bill of Materials.

Bars indicated thus 20x3-#5 etc. indicates 20 lines of bars with 3 lengths per line.

See Sheet S4 of 14 for parapet reinforcement.

See Sheet S4 of 14 for bearing pad details.

FILE NAME = g:\projects\2102155.010\cadd\structure\0160814-02M80-003-Deck 1.dgn

ENTRAN	USER NAME = 2sayerb	DESIGNED - BPS	REVISED -
		CHECKED - BHS	REVISED -
	PLOT SCALE = N/A	DRAWN - BPS	REVISED -
	PLOT DATE = 10/14/2011	CHECKED - GSP	REVISED -

STATE OF ILLINOIS
DEPARTMENT OF TRANSPORTATION

DECK PLAN
S.N. 016-0814
SHEET NO. S3 OF 14 SHEETS

F.A.U. RTE.	SECTION	COUNTY	TOTAL SHEETS	SHEET NO.
2760	100-B-1	COOK	28	13
		CONTRACT NO. 60M80		
		ILLINOIS FED. AID PROJECT		

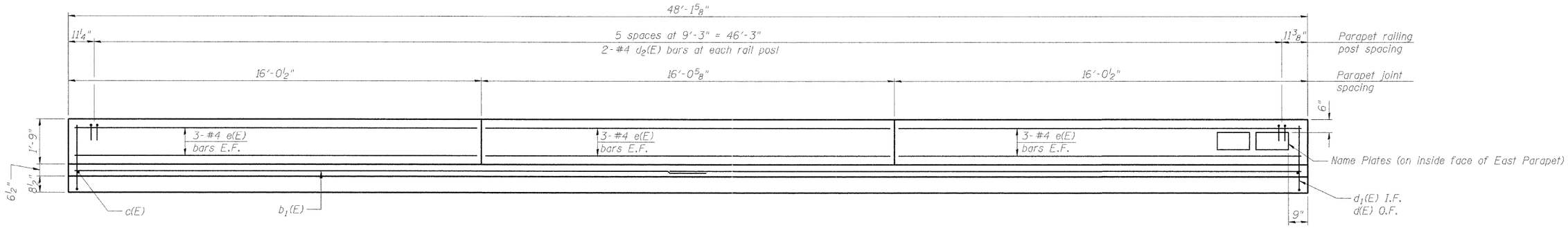

INSIDE ELEVATION OF PARAPET

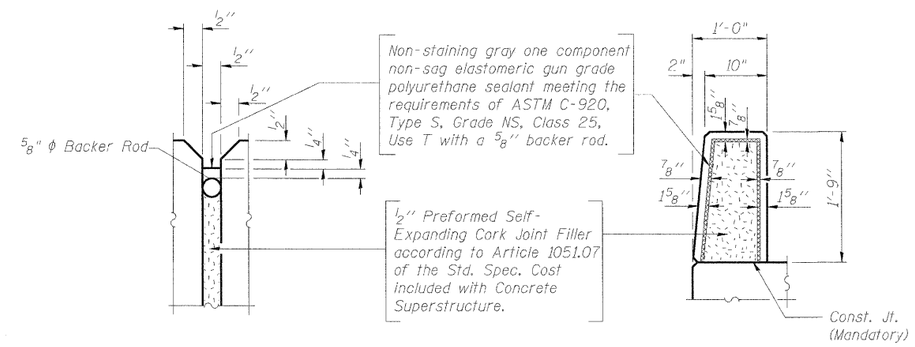

PARAPET JOINT DETAILS

SUPERSTRUCTURE BILL OF MATERIAL

Bar	No.	Size	Length	Shape
a(E)	98	#4	20'-11"	
b(E)	82	#4	25'-0"	
b_1(E)	32	#5	25'-3"	
c(E)	98	#5	5'-8"	
d(E)	98	#4	3'-1"	L
d_1(E)	98	#6	3'-5"	L
d_2(E)	24	#4	2'-0"	⊓
e(E)	36	#4	15'-8"	
h(E)	10	#5	23'-8"	
v(E)	50	#5	2'-5"	⊓
Concrete Superstructure			Cu. Yd.	20.7
Bridge Deck Grooving			Sq. Yd.	139
Protective Coat			Sq. Yd.	238
Reinforcement Bars, Epoxy Coated			Pound	5,650
Concrete Wearing Surface, 5"			Sq. Yd.	214

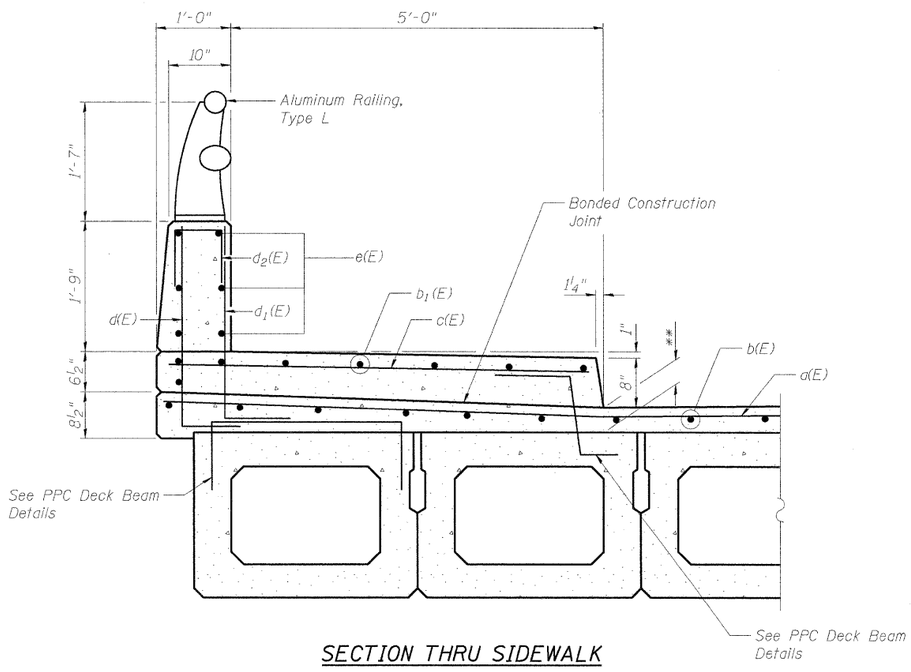

SECTION THRU SIDEWALK

** Varies from 4" at midspan to 4 5/8" at end of deck

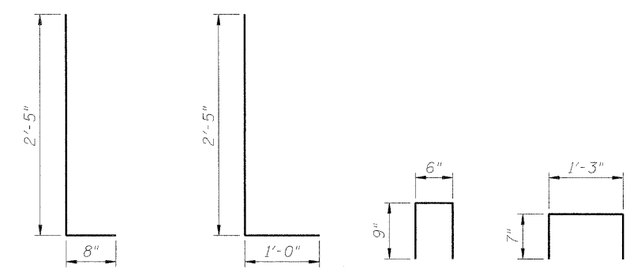

BAR d(E) BAR d_1(E) BAR d_2(E) BAR v(E)

FILE NAME = g:\project\2102155.010\cadd\structure\0160814-60M80-004-Deck 2.dgn

ENTRAN	USER NAME = 2PIENID	DESIGNED - BPS	REVISED -	STATE OF ILLINOIS DEPARTMENT OF TRANSPORTATION	SUPERSTRUCTURE DETAIL S.N. 016-0814	F.A.U. RTE. 2760	SECTION 100-B-1	COUNTY COOK	TOTAL SHEETS 28	SHEET NO. 14
		CHECKED - BHS	REVISED -					CONTRACT NO. 60M80		
	PLOT SCALE = N/A	DRAWN - BPS	REVISED -							
	PLOT DATE = 8/31/2011	CHECKED - GSP	REVISED -		SHEET NO. S4 OF 14 SHEETS			ILLINOIS FED. AID PROJECT		

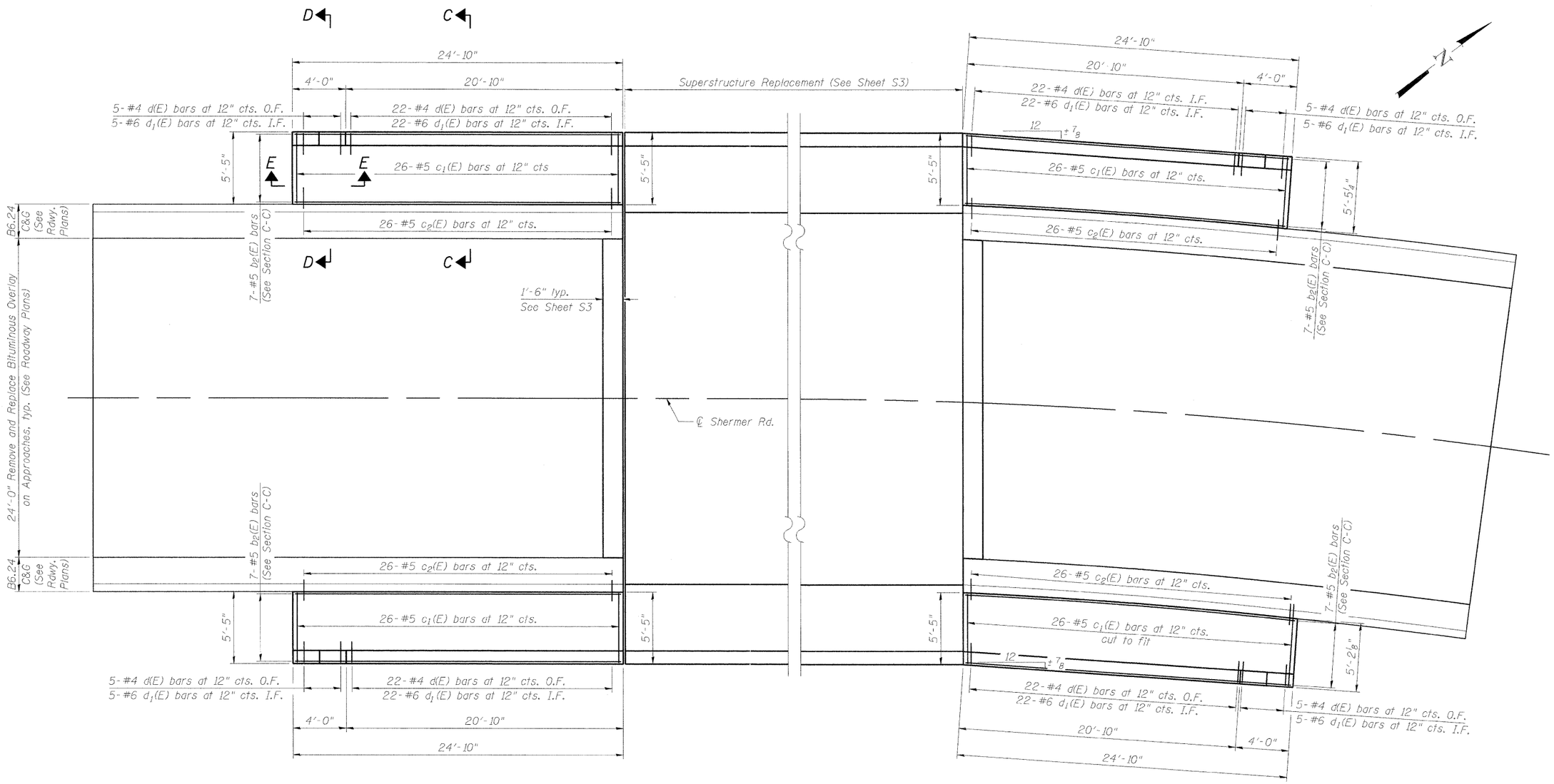

APPROACH SIDEWALK PLAN

Notes:
See Sheet S6 for Section C-C, Sectiion D-D and View E-E.
See Sheet S2 for limits of Concrete Removal.

FILE NAME = g:\project\2102155.010\cadd\structure\0160814-60M80-005-Approach 1.dgn

ENTRAN	USER NAME = 2PIENID	DESIGNED - BPS	REVISED -	STATE OF ILLINOIS DEPARTMENT OF TRANSPORTATION	APPROACH DETAILS (1 OF 2) S.N. 016-0814	F.A.U. RTE.	SECTION	COUNTY	TOTAL SHEETS / SHEET NO.
		CHECKED - BHS	REVISED -			2760	100-B-1	COOK	28 / 15
	PLOT SCALE = N/A	DRAWN - BPS	REVISED -					CONTRACT NO. 60M80	
	PLOT DATE = 8/31/2011	CHECKED - GSP	REVISED -		SHEET NO. S5 OF 14 SHEETS		ILLINOIS FED. AID PROJECT		

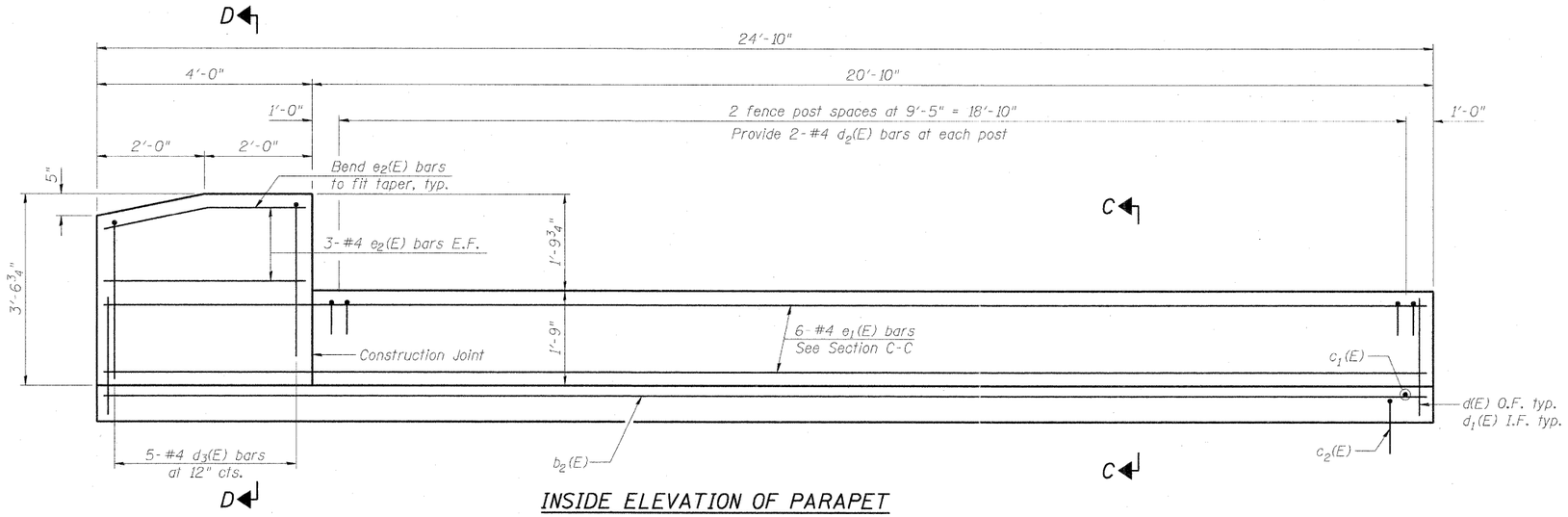

INSIDE ELEVATION OF PARAPET

APPROACH SIDEWALKS BILL OF MATERIAL

Bar	No.	Size	Length	Shape
b_2(E)	28	#5	24'-6"	——
c_1(E)	104	#5	5'-1"	——
c_2(E)	104	#5	3'-0"	⌐
d(E)	108	#4	3'-1"	L
d_1(E)	108	#6	3'-5"	L
d_2(E)	24	#4	2'-0"	⊓
d_3(E)	20	#4	6'-0"	⊓
e_1(E)	24	#4	24'-6"	——
e_2(E)	24	#4	3'-8"	——
Concrete Superstructure			Cu. Yd.	21.6
Protective Coat			Sq. Yd.	82
Reinforcement Bars, Epoxy Coated			Pound	2,930

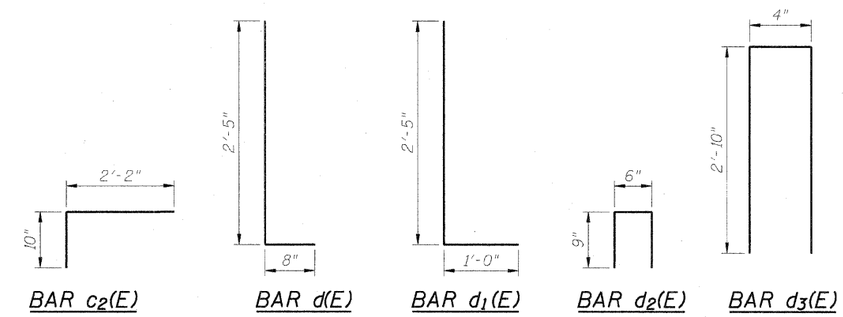

BAR c_2(E) BAR d(E) BAR d_1(E) BAR d_2(E) BAR d_3(E)

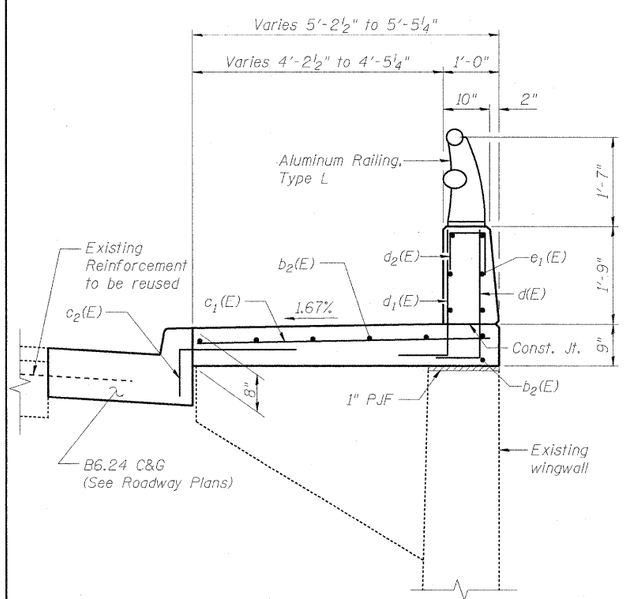

SECTION C-C

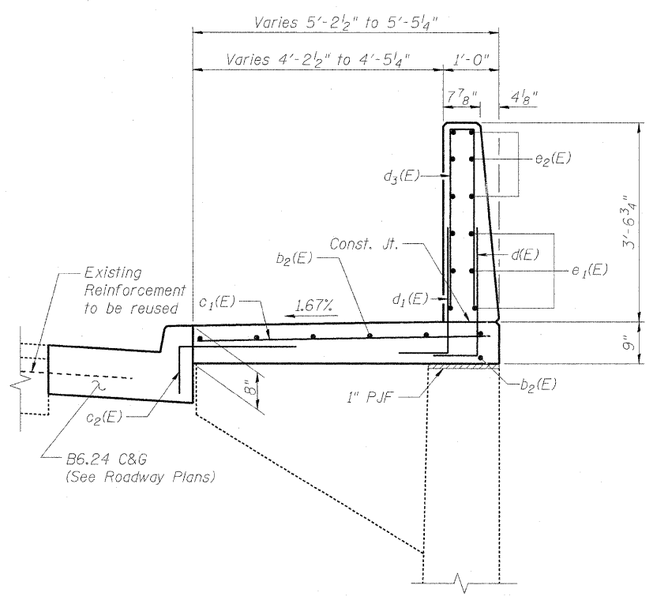

SECTION D-D

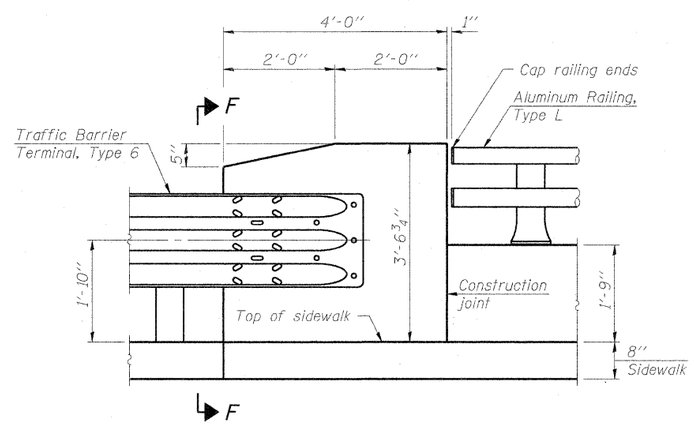

VIEW E-E

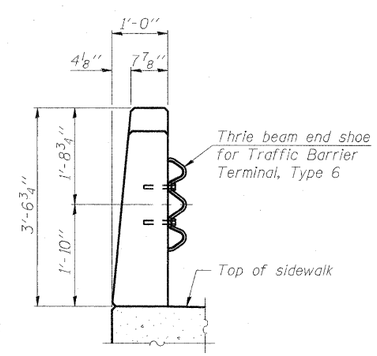

SECTION F-F

FILE NAME = g:\projects\2102155.010\cadd\structure\0160814-60M80-006-Approach 2.dgn

ENTRAN	USER NAME = 2sayerb	DESIGNED - BPS	REVISED -	STATE OF ILLINOIS DEPARTMENT OF TRANSPORTATION	APPROACH DETAILS (2 OF 2) S.N. 016-0814	F.A.U. RTE.	SECTION	COUNTY	TOTAL SHEETS	SHEET NO.
		CHECKED - BHS	REVISED -			2760	100-B-1	COOK	28	16
	PLOT SCALE = N/A	DRAWN - BPS	REVISED -					CONTRACT NO. 60M80		
	PLOT DATE = 9/31/2011	CHECKED - GSP	REVISED -		SHEET NO. S6 OF 14 SHEETS			ILLINOIS FED. AID PROJECT		

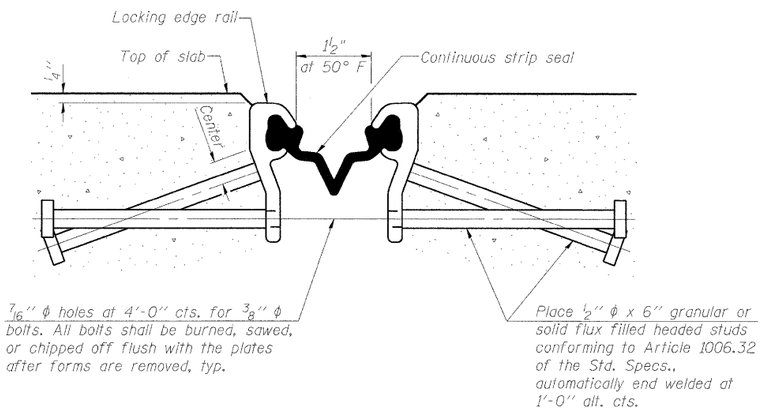

SECTION THRU STRIP SEAL JOINT

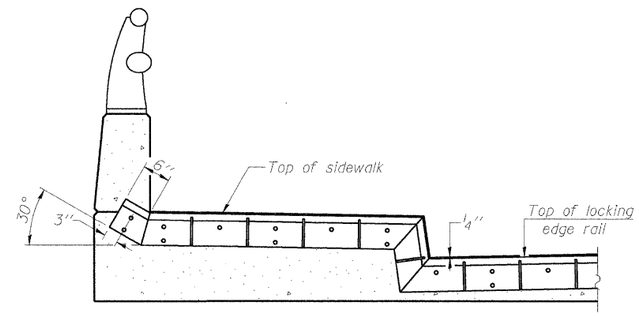

TYPICAL END TREATMENTS AT SIDEWALK

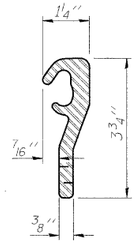

LOCKING EDGE RAIL

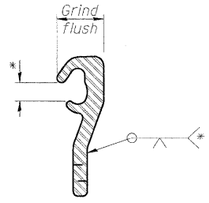

*Omit weld at seal opening.

LOCKING EDGE RAIL SPLICE

Notes:

The strip seal shall be made continuous and shall have a minimum thickness of ¼". The configuration of the strip seal shall match the configuration of the Locking Edge Rails.

The height and thickness of the Locking Edge Rails shown are minimum dimensions. The actual configuration of the Locking Edge Rails and matching strip seal may vary from manufacturer to manufacturer. Flanged edge rails will not be allowed.

The inside of the Locking Edge Rail groove shall be free of weld residue.

Locking Edge Rails may be spliced at slope discontinuities and stage construction joints.

The manufacturer's recommended installation methods shall be followed.

BILL OF MATERIAL

Item	Unit	Total
Preformed Joint Strip Seal	Foot	40.5

FILE NAME = g:\project\2102155.010\cadd\structure\0160814-60M80-007-Joint Seal.dgn

ENTRAN	USER NAME = 2PIENID	DESIGNED - BPS	REVISED -	STATE OF ILLINOIS DEPARTMENT OF TRANSPORTATION	PREFORMED JOINT STRIP SEAL S.N. 016-0814	F.A.U. RTE.	SECTION	COUNTY	TOTAL SHEETS	SHEET NO.
		CHECKED - BHS	REVISED -			2760	100-B-1	COOK	28	17
	PLOT SCALE = N/A	DRAWN - BPS	REVISED -					CONTRACT NO. 60M80		
	PLOT DATE = 8/31/2011	CHECKED - GSP	REVISED -		SHEET NO. 57 OF 14 SHEETS		ILLINOIS	FED. AID PROJECT		

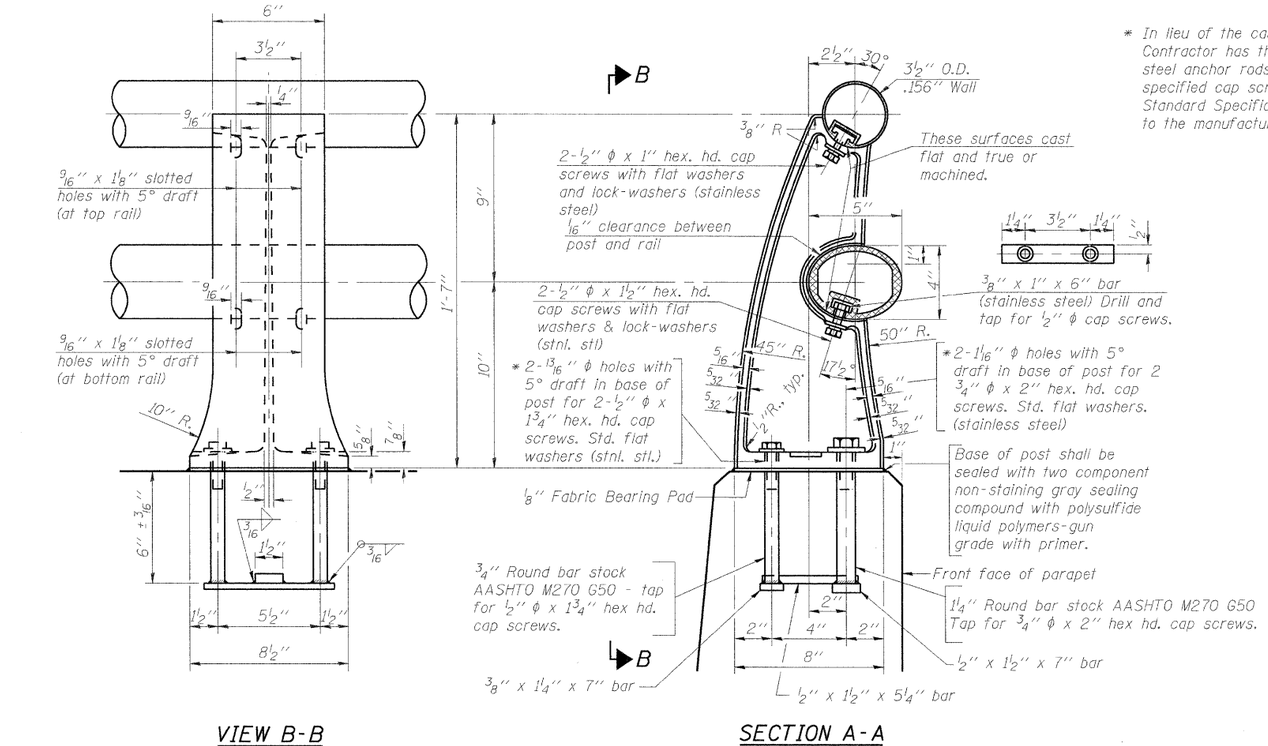

VIEW B-B

SECTION A-B

RAIL POST DETAILS

* In lieu of the cast-in-place anchor device shown, the Contractor has the option of drilling and setting stainless steel anchor rods of the same diameter and grade as the specified cap screws according to Article 509.06 of the Standard Specifications. Embedment shall be according to the manufacturer's specifications.

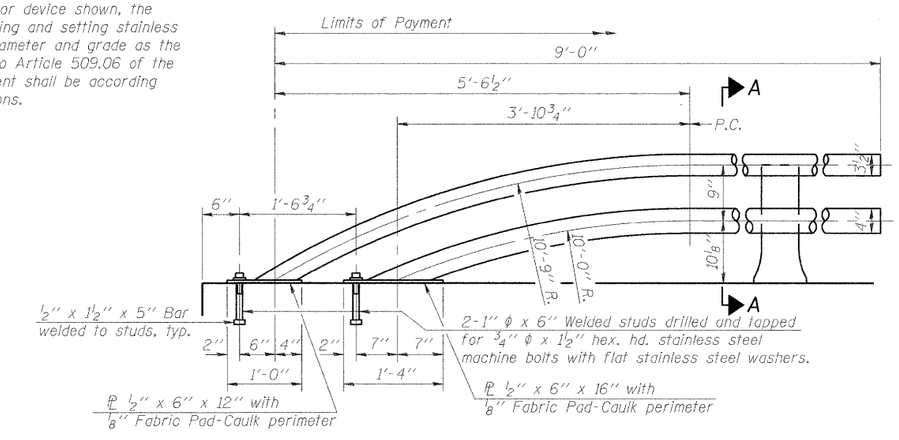

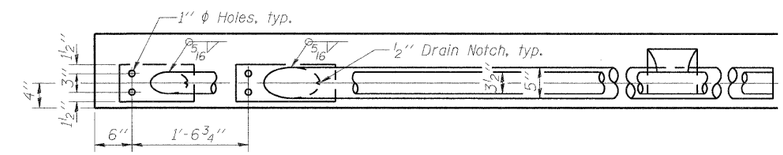

RAIL TERMINAL SECTION

Note:
The end rail post shall be set back as required for the terminal rail section.

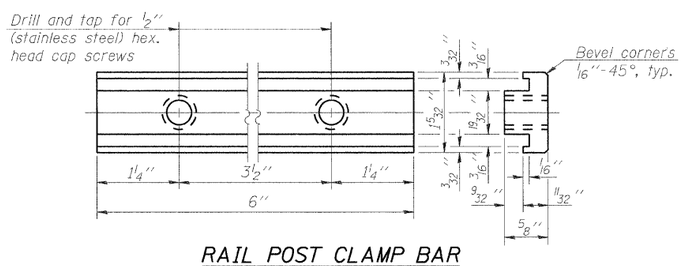

RAIL POST CLAMP BAR
For Top Rail

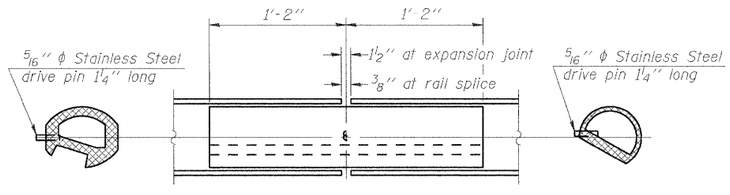

BOTTOM RAIL

TOP RAIL

RAIL SPLICE

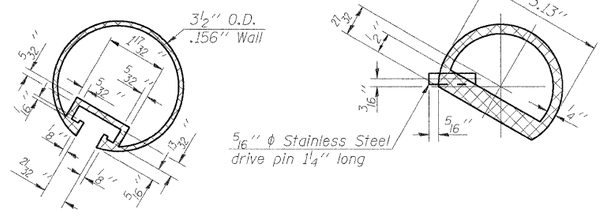

SECTION THRU TOP RAIL

SECTION THRU SPLICE
For Top Rail

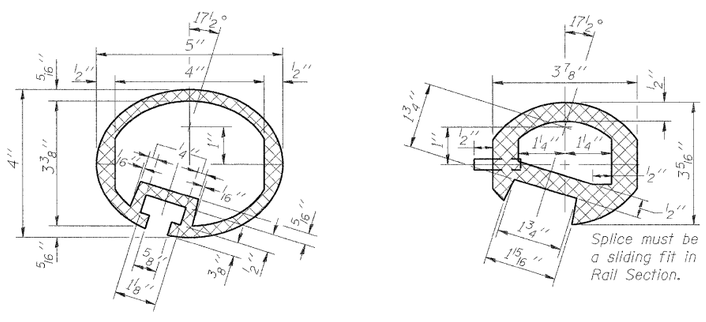

SEC. THRU ELLIPTICAL RAIL SECTION

SEC. THRU SPLICE

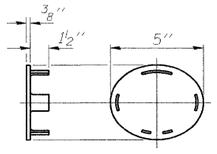

CAST END CAP
For bottom rail
DRIVE FIT TYPE

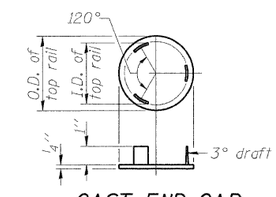

CAST END CAP
For top rail

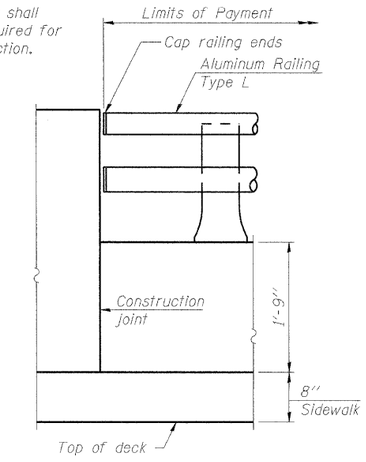

RAIL END TREATMENT FOR TYPE 5 AND 6 TERMINAL

Notes:
All Posts shall be normal to parapet.
All joints in rail shall be spliced per detail.
All exposed rail ends shall be capped per detail.
Provide 1-⅛" and 2-1/16" Aluminum Shims for 25% of the Posts. Rail elements shall be parallel to Grade-high spots will be ground and low spots shimmed.
See sheet of for rail post spacing.

BILL OF MATERIAL

Item	Unit	Quantity
Aluminum Railing, Type L	Foot	180

R-20

7-1-10 (7'-0" to 10'-0" Post spacing)

FILE NAME = g:\project\2102155.010\cad\structure\0160814-60M80-0203-Railing.dgn

ENTRAN

USER NAME = 2PIENID	DESIGNED - BPS	REVISED -
	CHECKED - BHS	REVISED -
PLOT SCALE = N/A	DRAWN - BPS	REVISED -
PLOT DATE = 8/31/2011	CHECKED - GSP	REVISED -

STATE OF ILLINOIS
DEPARTMENT OF TRANSPORTATION

ALUMINUM RAILING, TYPE L
S.N. 016-0814
SHEET NO. 58 OF 14 SHEETS

F.A.U. RTE.	SECTION	COUNTY	TOTAL SHEETS	SHEET NO.
2760	100-B-1	COOK	28	18
		CONTRACT NO. 60M80		
		ILLINOIS FED. AID PROJECT		

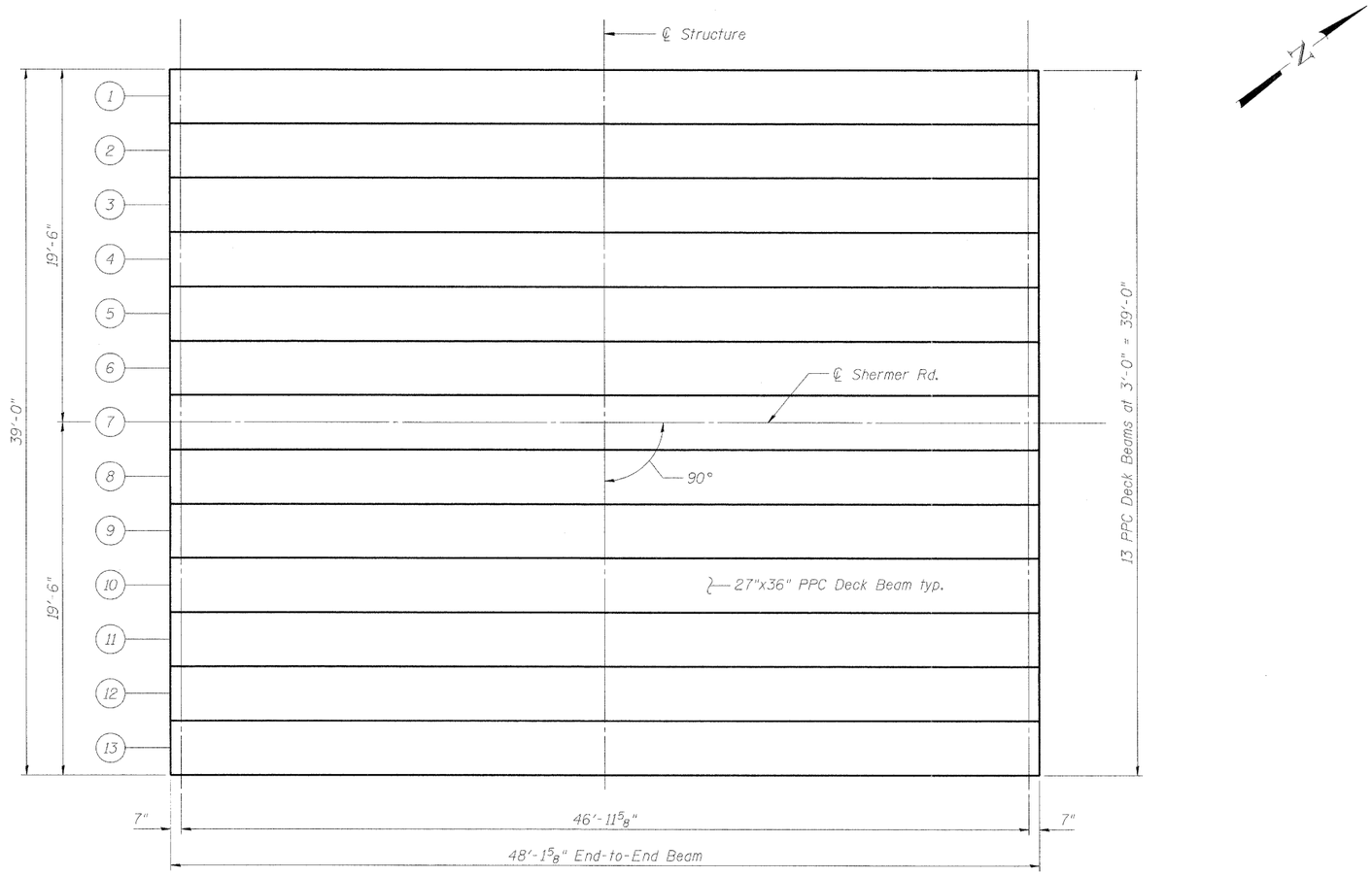

FRAMING PLAN

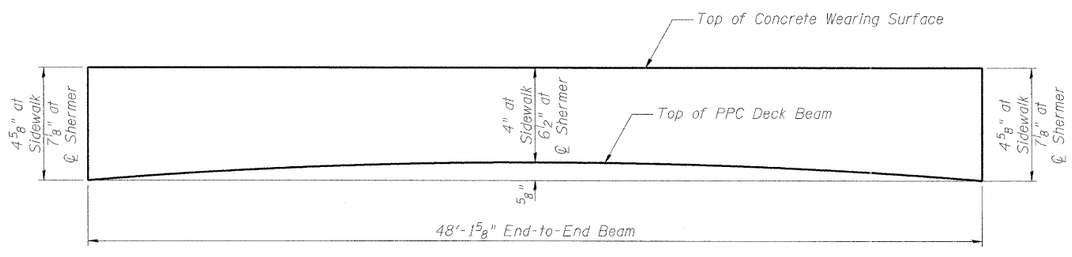

INITIAL CAMBER DIAGRAM

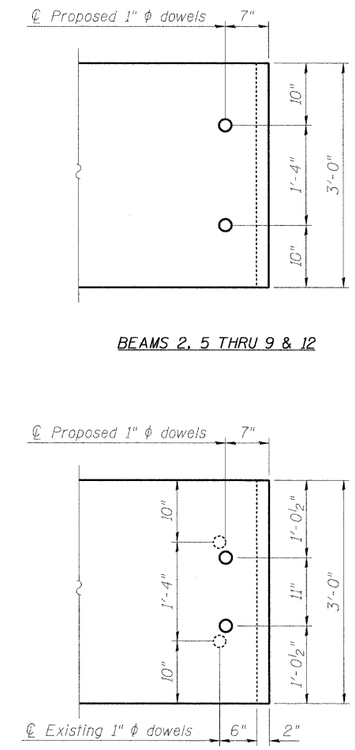

BEAMS 2, 5 THRU 9 & 12

BEAMS 1, 3, 4, 10, 11 & 13

DOWEL PLAN AT FIXED END

(North Abutment)

Note:
Existing Dowel Rods shall be cut off & ground flush with the top of the existing concrete. Cost to be included with Removal of Existing Superstructures.

FILE NAME = g:\project\2102155.010\cadd\structure\0160814-60M80-009-Framing.dgn

ENTRAN	USER NAME = 2PIENID	DESIGNED - BPS	REVISED -	STATE OF ILLINOIS DEPARTMENT OF TRANSPORTATION	FRAMING PLAN S.N. 016-0814	F.A.U. RTE.	SECTION	COUNTY	TOTAL SHEETS	SHEET NO.
		CHECKED - BHS	REVISED -			2760	100-B-1	COOK	28	19
	PLOT SCALE = N/A	DRAWN - BPS	REVISED -					CONTRACT NO. 60M80		
	PLOT DATE = 8/31/2011	CHECKED - GSP	REVISED -		SHEET NO. S9 OF 14 SHEETS		ILLINOIS FED. AID PROJECT			

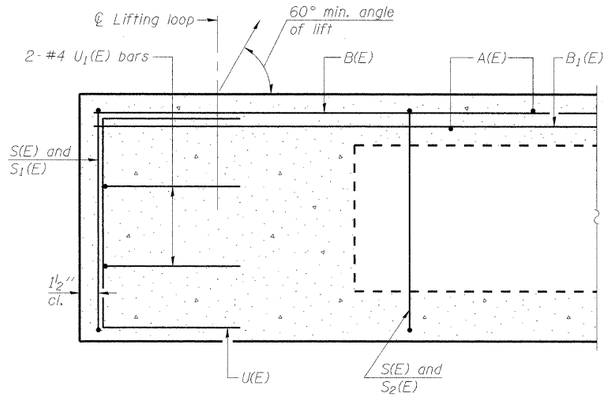

SECTION A-A

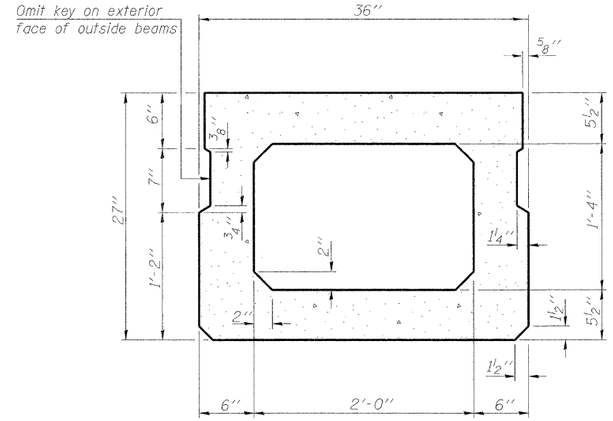

SECTION B-B

(Showing dimensions)

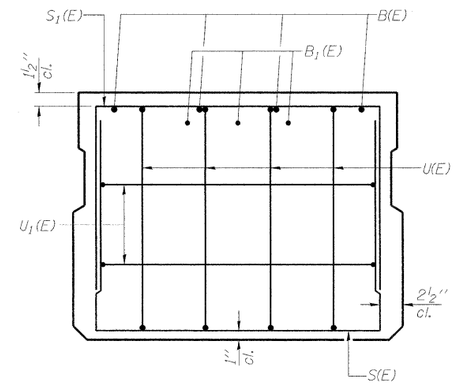

VIEW C-C

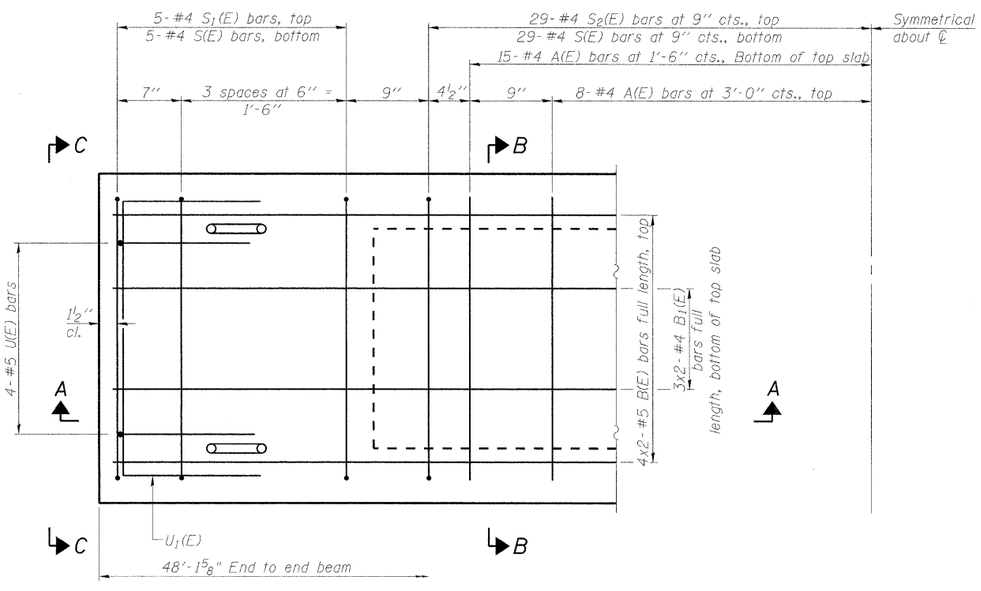

PLAN VIEW

Note: Spacing of S(E) and $S_2(E)$ bars may be adjusted up to 4" in the immediate area of the transverse tie diaphragms to miss the block outs for the transverse ties.

MINIMUM BAR LAP

#4 bar = 2'-0"
#5 bar = 2'-6"

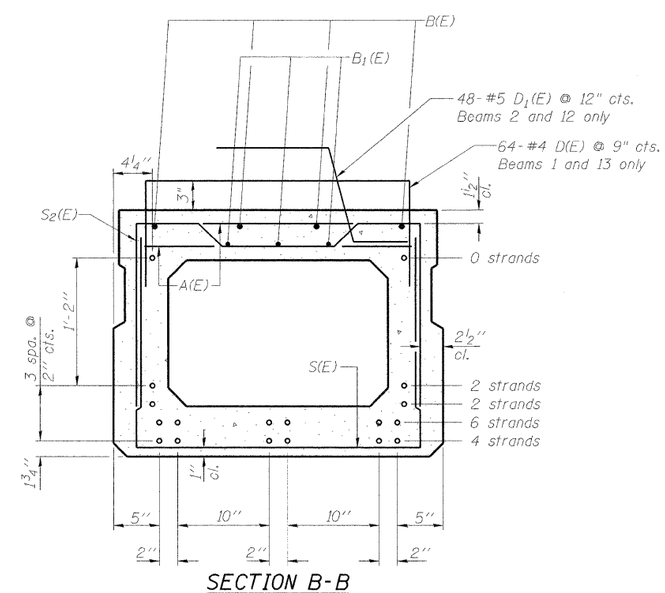

SECTION B-B

(Showing reinforcement and permissible strand locations)

Note: Place the number of strands specified in each row symmetrically about the centerline of beam in the permissible strand locations shown.

BAR LIST
ONE BEAM ONLY

(For information only)

	Bar	No.	Size	Length	Shape
	A(E)	46	#4	2'-7"	—
	B(E)	8	#5	25'-3"	—
	$B_1(E)$	6	#4	25'-0"	—
*	D(E)	64	#4	5'-1"	⊓
**	$D_1(E)$	48	#5	2'-10"	⊓
	S(E)	68	#4	6'-5"	⊔
	$S_1(E)$	10	#4	5'-11"	⊓
	$S_2(E)$	58	#4	6'-2"	⊓
	U(E)	8	#5	4'-6"	⊏
	$U_1(E)$	4	#4	5'-0"	⊓

Note: See sheet S11 of 14 for additional details and Bill of Material.
* Beams 1 and 13 only
** Beams 2 and 12 only

FILE NAME = g:\project\2102155.010\cadd\structure\0150014-60M80-010-Beam1.dgn

ENTRAN	USER NAME = 2sayerb	DESIGNED - BPS	REVISED -
		CHECKED - BHS	REVISED -
	PLOT SCALE = N/A	DRAWN - BPS	REVISED -
	PLOT DATE = 10/14/2011	CHECKED - GSP	REVISED -

STATE OF ILLINOIS
DEPARTMENT OF TRANSPORTATION

27" x 36" PPC DECK BEAM
S.N. 016-0814
SHEET NO. S10 OF 14 SHEETS

F.A.U. RTE.	SECTION	COUNTY	TOTAL SHEETS	SHEET NO.
2760	100-B-1	COOK	28	20
		CONTRACT NO. 60M80		
		ILLINOIS FED. AID PROJECT		

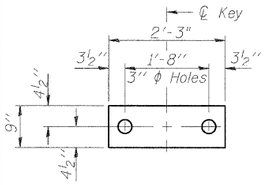

FABRIC BEARING PAD
(Interior)
(4-required)

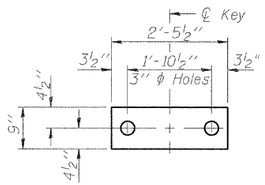

FABRIC BEARING PAD
(Interior)
(6-required)

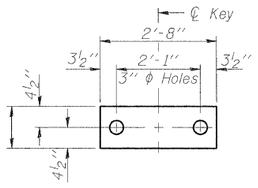

FABRIC BEARING PAD
(Interior)
(2-required)

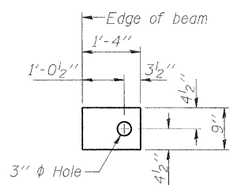

FABRIC BEARING PAD
(Exterior)
(2-required)

FIXED

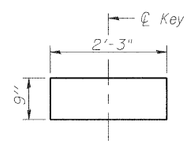

FABRIC BEARING PAD
(Interior)
(12-required)

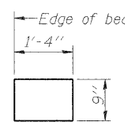

FABRIC BEARING PAD
(Exterior)
(2-required)

EXPANSION

Notes:
All bearing pads shall be 1" thick.
Expansion bearing pad shall be bonded to the substructure.

Note: Connect beams in pairs with the transverse tie configuration shown.

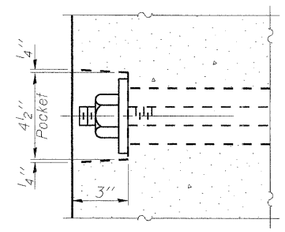

SECTION A-A

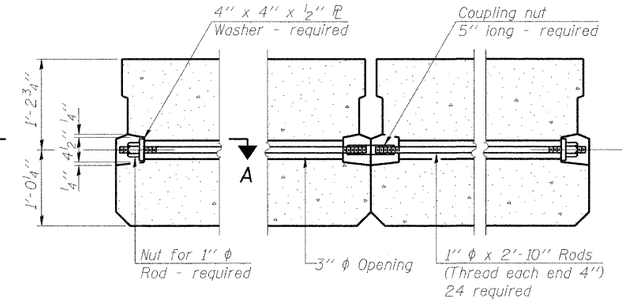

TYPICAL TRANSVERSE TIE ASSEMBLY

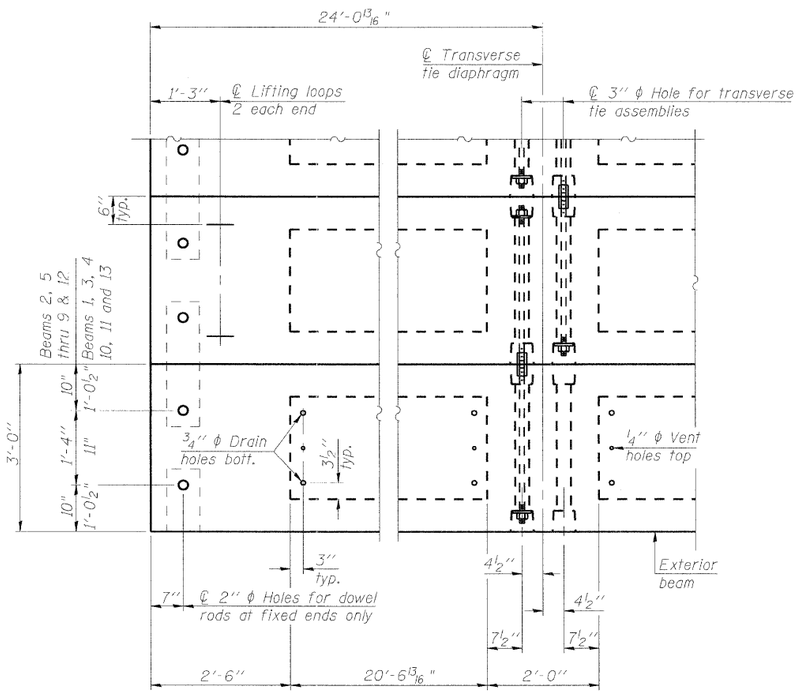

PLAN VIEW

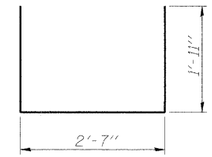

BAR S(E)

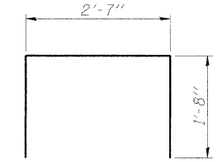

BAR S1(E)

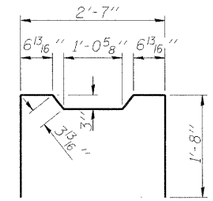

BAR S2(E)

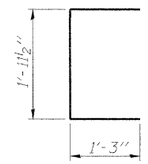

BAR U(E)

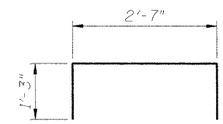

BAR D(E)

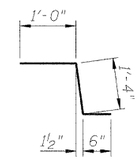

BAR D1(E)

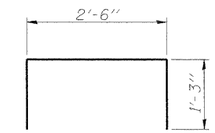

BAR U1(E)

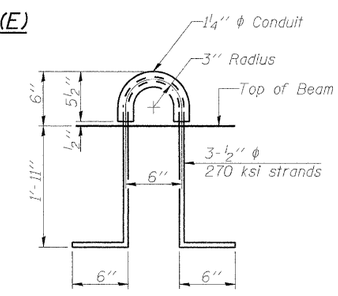

LIFTING LOOP DETAIL

NOTES

Prestressing steel shall be uncoated high strength, low relaxation 7-wire strand. Grade 270. The nominal diameter shall be ½" and the nominal cross-sectional area shall be 0.153 sq. in.

The 1" ϕ rods in the transverse tie assembly shall be tightened to a snug fit and the threads set. Pockets on exterior faces of bridge shall be filled with grout after transverse tie assembly is in place.

Reinforcement bars shall conform to ASTM A 706, Grade 60. (See Special Provisions).

Two ⅛" fabric adjusting shims of the dimensions of the exterior bearing pad shall be provided for each bearing pad location.

A minimum 2½" ϕ lifting pin shall be used to engage the lifting loops during handling.

Corrosion Inhibitor, per Article 1020.05(b)(12) and 1021.06 of the Standard Specifications, shall be used in the concrete for precast prestressed concrete deck beams.

Compressive strength of prestressed concrete, f'c, shall be 6000 psi.

Compressive strength of prestressed concrete at release, f'ci, shall be 5000 psi.

BILL OF MATERIAL

Precast Prestressed Conc. Deck Bms. (27" depth)	Sq. Ft.	1,877

FILE NAME = g:\projects\2102155.01R\roadway\structure\0160814-60M80-2011-Beam2.dgn

ENTRAN

USER NAME = 2PIENID	DESIGNED - BPS	REVISED -	
	CHECKED - BHS	REVISED -	
PLOT SCALE = N/A	DRAWN - BPS	REVISED -	
PLOT DATE = 8/31/2011	CHECKED - GSP	REVISED -	

STATE OF ILLINOIS
DEPARTMENT OF TRANSPORTATION

27"x 36" PPC DECK BEAM DETAILS
S.N. 016-0814

SHEET NO. S11 OF 14 SHEETS

F.A.U. RTE.	SECTION	COUNTY	TOTAL SHEETS	SHEET NO.
2760	100-B-1	COOK	28	21
		CONTRACT NO. 60M80		
		ILLINOIS FED. AID PROJECT		

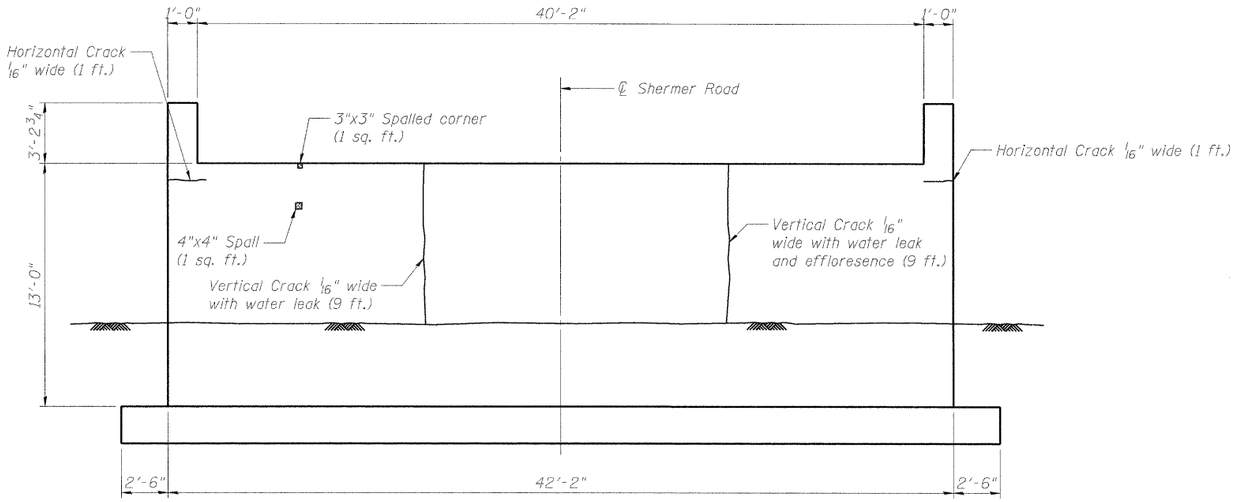

NORTH ABUTMENT

(Looking North)

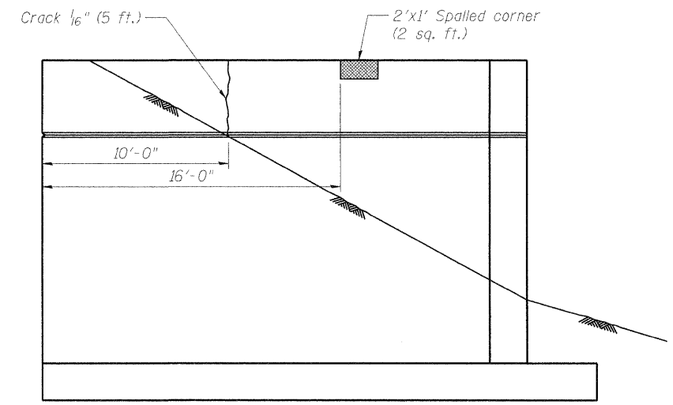

NORTHWEST WING WALL

(Looking East)

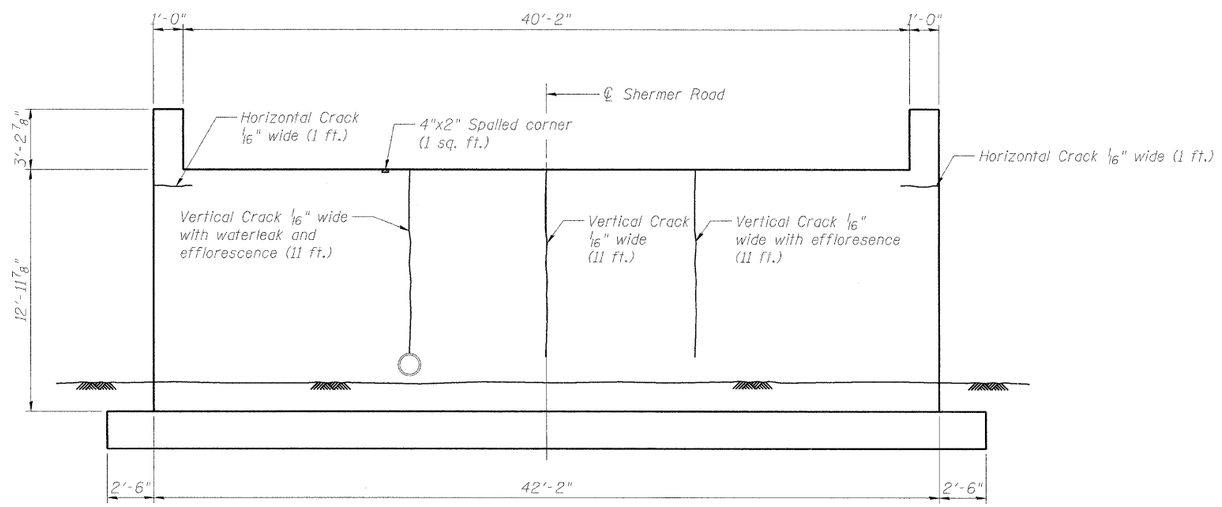

SOUTH ABUTMENT

(Looking South)

BILL OF MATERIAL

Symbol	Item Description	Unit	Quantity
	Structural Repair of Concrete (Depth equal to or less than 5 inches)	Sq. Ft.	5
	Epoxy Crack Injection	Foot	60

FILE NAME = g:\project\2102155_010\cadd\structure\0160814-60M80-012-Abutments.dgn

ENTRAN	USER NAME = 2PIENID	DESIGNED - BPS	REVISED -	STATE OF ILLINOIS DEPARTMENT OF TRANSPORTATION	SUBSTRUCTURE REPAIR S.N. 016-0814	F.A.U. RTE.	SECTION	COUNTY	TOTAL SHEETS	SHEET NO.
		CHECKED - BHS	REVISED -			2760	100-B-1	COOK	28	22
	PLOT SCALE = N/A	DRAWN - BPS	REVISED -					CONTRACT NO. 60M80		
	PLOT DATE = 8/31/2011	CHECKED - GSP	REVISED -		SHEET NO. S12 OF 14 SHEETS		ILLINOIS FED. AID PROJECT			

S.A. 106 Shermer Rd.	106-0203-DL	COOK	6	2

NOTE: REMOVE EXISTING BITUMINOUS RESURFACING FROM DECK AND APPROACH SLABS. (AVE. THICKNESS OF BIT. 3" ON DECK AND 2" ON APPROACH SLABS)
" BITUMINOUS CONCRETE SURFACE REMOVAL" — 3164 Sq. Yd.

CONSTRUCT CONCRETE WEARING SURFACE ON BRIDGE DECK AND RE-SURFACE APPROACH SLABS. (SEE SHT #3 FOR DETAILS)

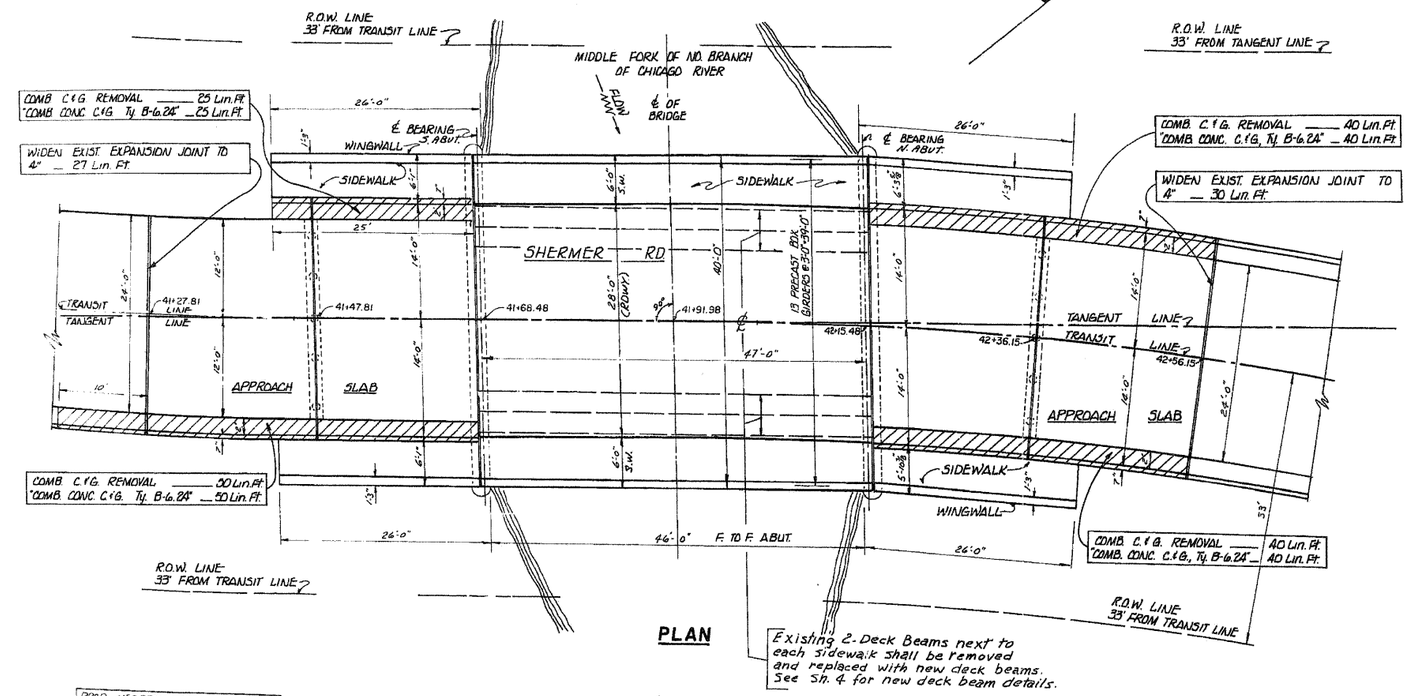

PLAN

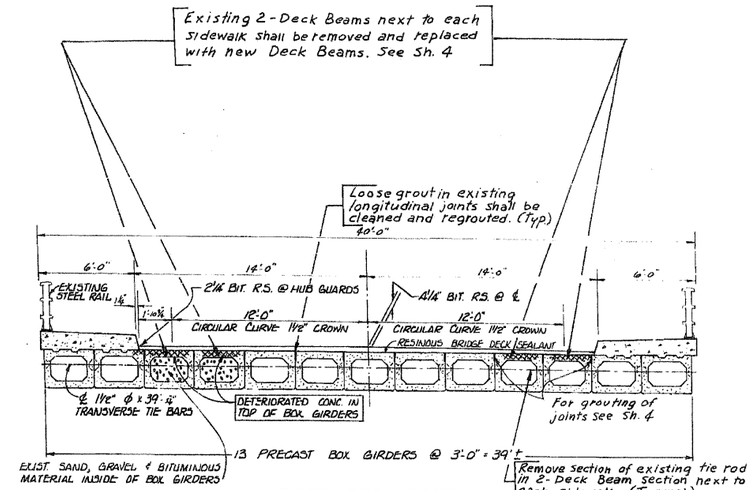

EXIST. DECK SECTION
STATION 41+91.98

(For rehabilitation of roadway surface see Note above Plan view.)

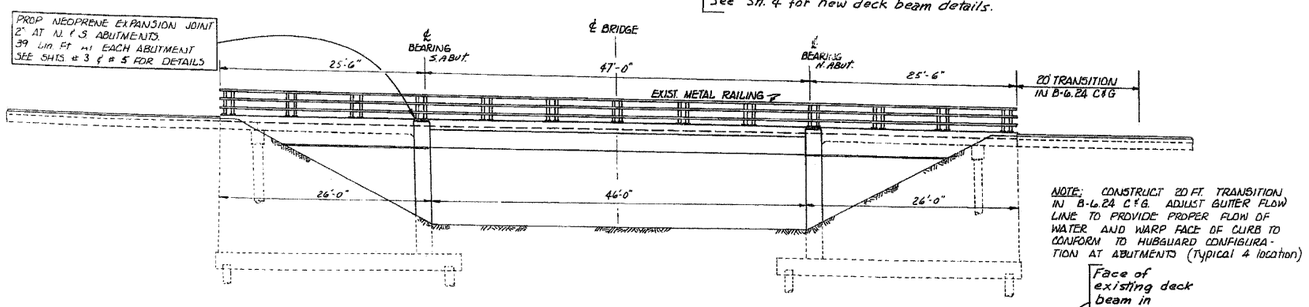

ELEVATION

NOTE: CONSTRUCT 20 FT. TRANSITION IN B-6.24 C&G. ADJUST GUTTER FLOW LINE TO PROVIDE PROPER FLOW OF WATER AND WARP FACE OF CURB TO CONFORM TO HUBGUARD CONFIGURATION AT ABUTMENTS (Typical 4 location)

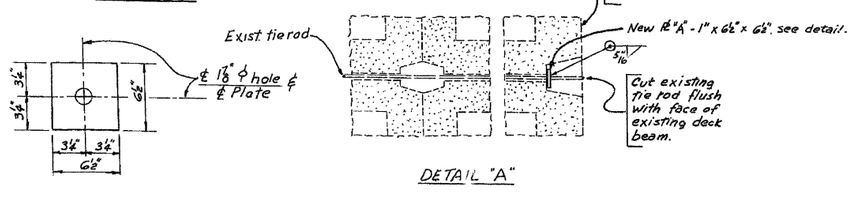

DETAIL "A"

PLATE "A" - 1" x 6½" x 6½"

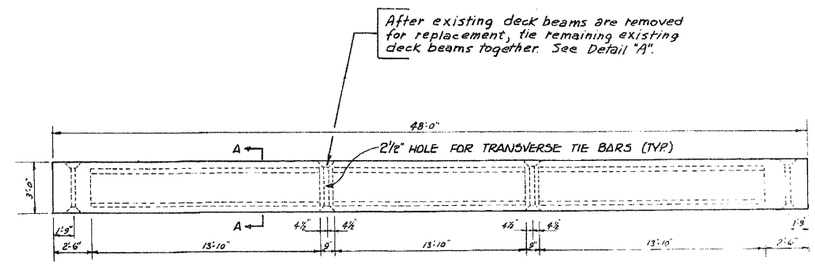

PLAN: BOX GIRDER
(Existing)

GENERAL PLAN & ELEVATION
SHERMER RD. OVER MIDDLE FORK NO. BRANCH CHICAGO RIVER
S.A. 106 SEC. 106-0203-DL

REVISED 4-19-78

ENTRAN	USER NAME = 2PIENID	DESIGNED - BPS	REVISED -	STATE OF ILLINOIS DEPARTMENT OF TRANSPORTATION	EXISTING BRIDGE PLANS (1 OF 2) S.N. 016-0814	F.A.U. RTE.	SECTION	COUNTY	TOTAL SHEETS	SHEET NO.
		CHECKED - BHS	REVISED -			2760	100-B-1	COOK	28	23
	PLOT SCALE = N/A	DRAWN - BPS	REVISED -					CONTRACT NO. 60M80		
	PLOT DATE = 8/31/2011	CHECKED - GSP	REVISED -		SHEET NO. S13 OF 14 SHEETS		ILLINOIS	FED. AID PROJECT		

FILE NAME = g:\projects\2102155.010\cadd\structure\0160814-60M80-013-Existing 1.dgn

ROUTE	SECTION	COUNTY	TOTAL SHTS.	SHEET NO.
S.A. 106 SHERMER RD.	106-0203-DL	COOK	6	3

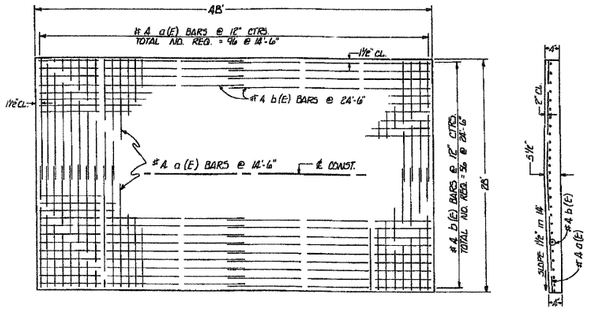

BRIDGE CONCRETE WEARING SURFACE REINFORCEMENT

BILL OF MATERIAL FOR BRIDGE CONCRETE WEARING SURFACE			
BAR	SIZE	NO. REQ.	LENGTH
a(E)	#4	96	14'-6"
b(E)	#4	56	24'-6"
REINF. BARS — 1850 #			
BRIDGE CONC. WEAR. SURF. – 150 Sq. Yd.			

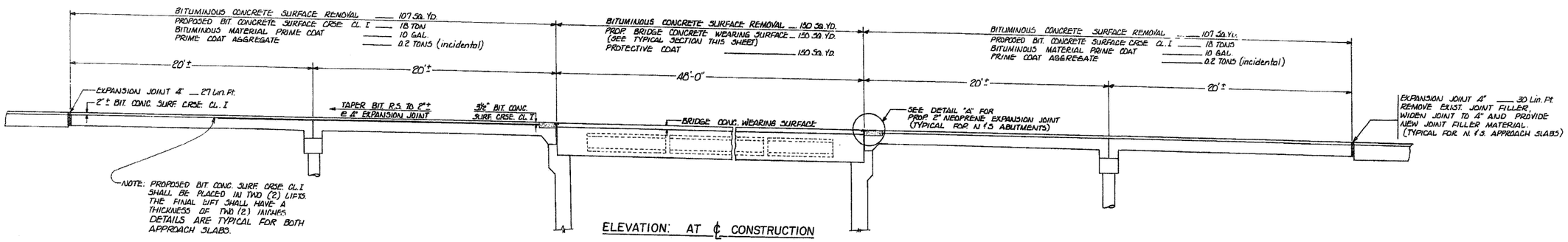

ELEVATION: AT ℄ CONSTRUCTION

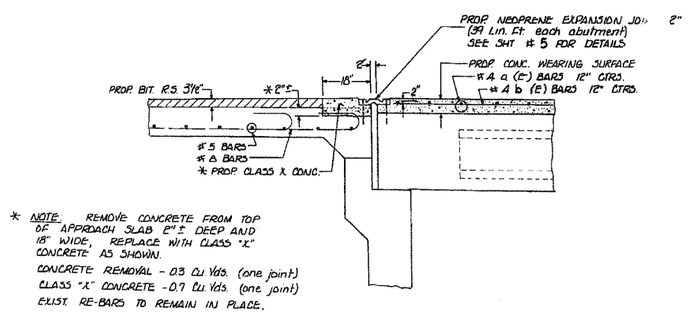

* NOTE: REMOVE CONCRETE FROM TOP OF APPROACH SLAB 2" ± DEEP AND 18" WIDE, REPLACE WITH CLASS "X" CONCRETE AS SHOWN.
CONCRETE REMOVAL - 0.3 Cu. Yds. (one joint)
CLASS "X" CONCRETE - 0.7 Cu. Yds. (one joint)
EXIST. RE-BARS TO REMAIN IN PLACE.

DETAIL "A"
NEOPRENE EXPANSION JOINT 2"

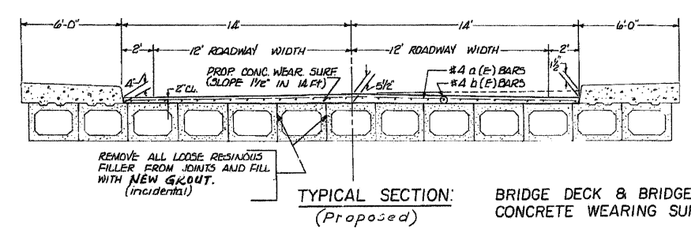

TYPICAL SECTION: (Proposed)

BRIDGE DECK & BRIDGE CONCRETE WEARING SURFACE

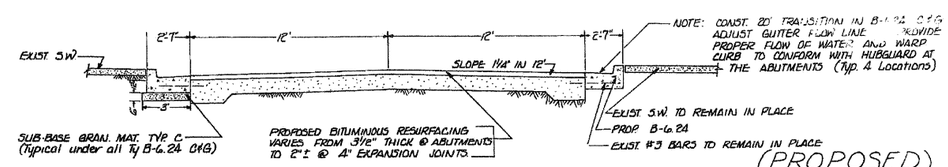

TYPICAL SECTION: APPROACH RESURFACING & PROP. B-6.24 COMB. CONC. CURB & GUTTER

(PROPOSED)

PROFILE, TYPICAL SECTIONS & NEOPRENE EXPANSION JOINTS

SHERMER RD. OVER MIDDLE FORK NO. BRANCH CHICAGO RIVER

S.A. 106 SEC. 106-0203-DL

DELETED 4-19-78

FILE NAME = g:\projects\21021515.010\cadd\structure\016B014-60M80-014-Existing 2.dgn

ENTRAN	USER NAME = 2PIENID	DESIGNED - BPS	REVISED -	STATE OF ILLINOIS DEPARTMENT OF TRANSPORTATION	EXISTING BRIDGE PLANS (2 OF 2) S.N. 016-0814	F.A.U. RTE.	SECTION	COUNTY	TOTAL SHEETS	SHEET NO.
		CHECKED - BHS	REVISED -			2760	100-B-1	COOK	28	24
	PLOT SCALE = N/A	DRAWN - BPS	REVISED -					CONTRACT NO. 60M80		
	PLOT DATE = 8/31/2011	CHECKED - GSP	REVISED -		SHEET NO. S14 OF 14 SHEETS		ILLINOIS	FED. AID PROJECT		

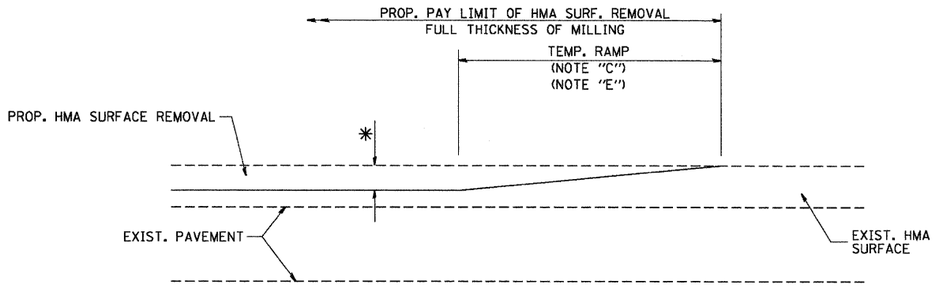

MILLED TEMPORARY RAMP

(FOR BUTT JOINT AND HMA TAPER SEE DETAIL BELOW)

OPTION 1

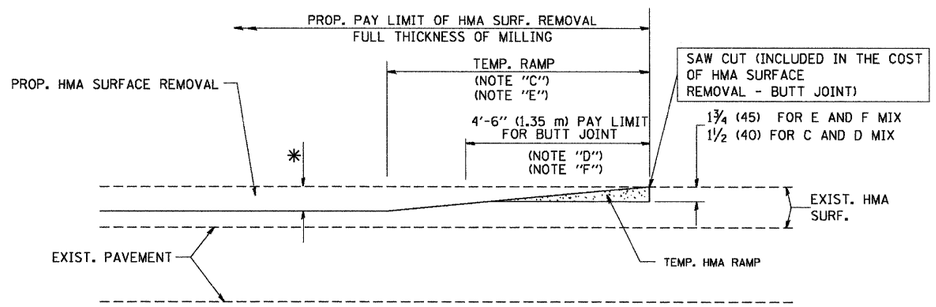

HMA CONSTRUCTED TEMPORARY RAMP

(FOR BUTT JOINT AND HMA TAPER SEE DETAIL BELOW)

OPTION 2

TYPICAL TEMPORARY RAMP

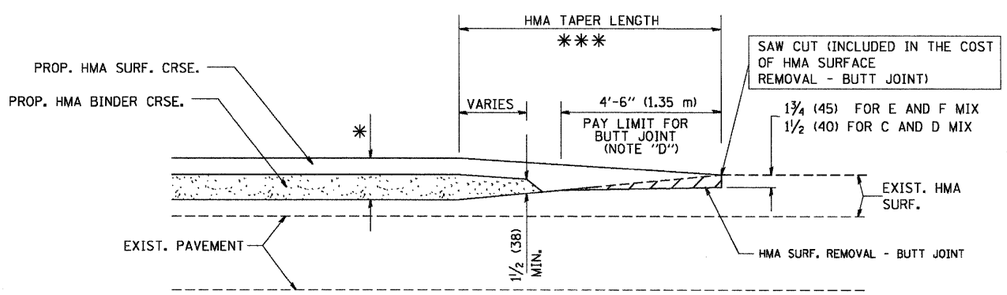

BUTT JOINT AND HMA TAPER

TYPICAL BUTT JOINT AND HMA TAPER FOR MILLING AND RESURFACING

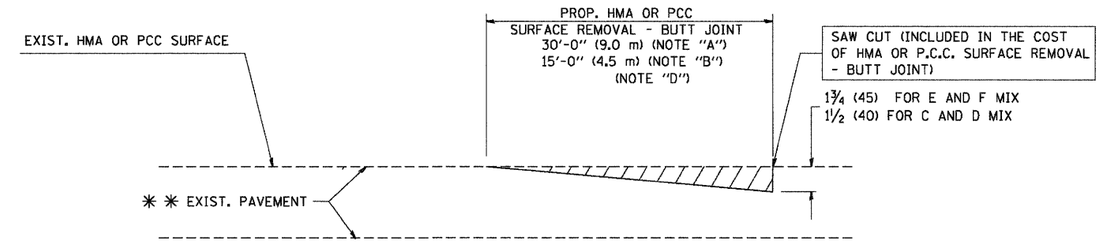

BUTT JOINT DETAIL

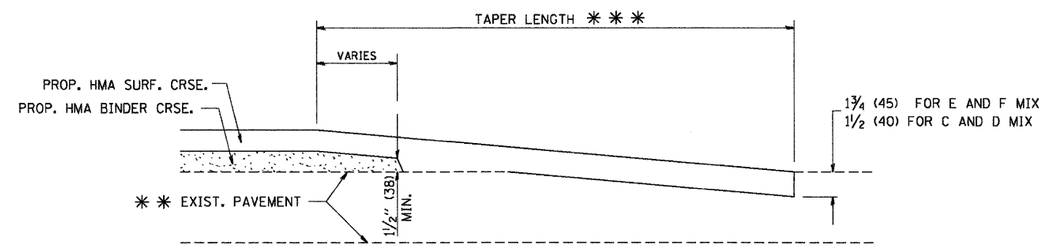

HMA TAPER DETAIL

TYPICAL BUTT JOINT AND HMA TAPER FOR RESURFACING ONLY

✳✳ PC CONCRETE, HMA OR HMA RESURFACED PAVEMENT.

NOTES

A: MAINLINE ROADWAYS AND MAJOR SIDE ROADS.

B: MINOR SIDE ROADS.

C: THE TEMP. RAMP SHALL BE CONSTRUCTED IMMEDIATELY UPON REMOVAL OF THE EXISTING HMA SURFACE.

D: THE BUTT JOINT SHALL BE CONSTRUCTED IMMEDIATELY PRIOR TO PLACING THE PROPOSED HMA COURSES.

E: TAPER THE TEMP. RAMP AT A RATE OF 3'-0" (900 mm) PER 1 INCH (25 mm) OF MILLING THICKNESS.

F: INSTALLATION AND REMOVAL OF THE 4'-6" (1.35 m) TEMP. RAMP IS INCLUDED IN COST OF HMA SURFACE REMOVAL - BUTT JOINT

G: SEE ARTICLE 406.08 AND 406.14 OF THE STANDARD SPECIFICATIONS FOR "HMA AND/OR PCC SURFACE REMOVAL, BUTT JOINT".

✳ SEE TYPICAL SECTIONS FOR MILLING THICKNESS.

✳✳✳ 20'-0" (6.1 m) PER 1 (25) RESURFACING (NOTE "A")
10'-0" (3.0 m) PER 1 (25) RESURFACING (NOTE "B")

BASIS OF PAYMENT:

THE BUTT JOINT WILL BE PAID FOR AT THE CONTRACT UNIT PRICE PER SQUARE YARD (SQUARE METER) FOR "HOT-MIX ASPHALT SURFACE REMOVAL - BUTT JOINT" OR FOR "PORTLAND CEMENT CONCRETE SURFACE REMOVAL- BUTT JOINT".

ALL DIMENSIONS ARE IN INCHES (MILLIMETERS) UNLESS OTHERWISE SHOWN.

FILE NAME = W:\diststd\22x34\bd32.dgn	USER NAME = gaglianobt	DESIGNED - M. DE YONG	REVISED - R. SHAH 10-25-94	STATE OF ILLINOIS DEPARTMENT OF TRANSPORTATION	BUTT JOINT AND HMA TAPER DETAILS
		DRAWN -	REVISED - A. ABBAS 03-21-97		
	PLOT SCALE = 50.0000 ' / IN.	CHECKED -	REVISED - M. GOMEZ 04-06-01		
	PLOT DATE = 1/4/2008	DATE - 06-13-90	REVISED - R. BORO 01-01-07		SCALE: NONE · SHEET NO. 1 OF 1 SHEETS · STA. · TO STA.

F.A.U. RTE.	SECTION	COUNTY	TOTAL SHEETS	SHEET NO.
2760	100-B-1	COOK	28	25
	BD400-05 BD32	CONTRACT NO.60M80		
FED. ROAD DIST. NO. 1	ILLINOIS	FED. AID PROJECT		

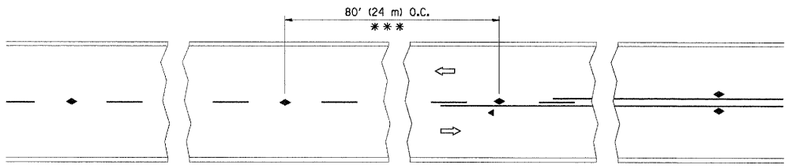

*** REDUCE TO 40' (12 m) O.C. ON CURVES WITH POSTED OR ADVISORY SPEED 45 M.P.H. (70 km/h) OR LESS.

TWO-LANE/TWO-WAY

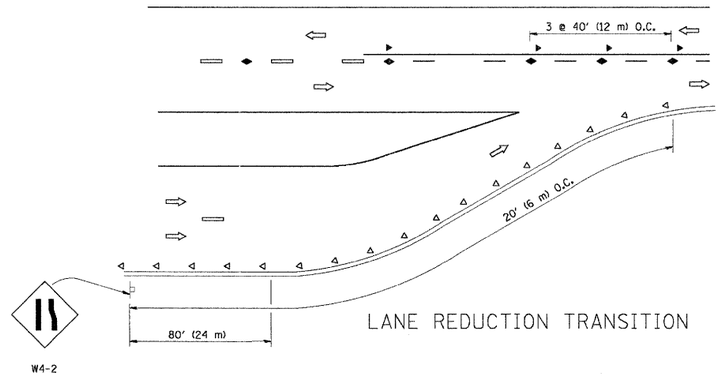

LANE REDUCTION TRANSITION

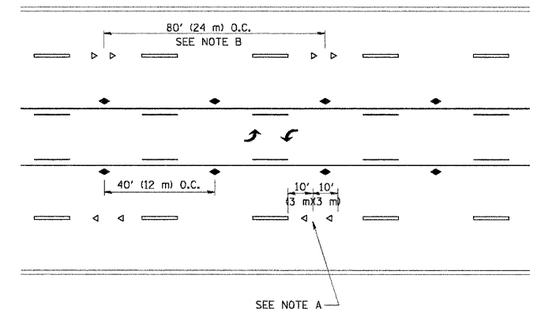

TWO-WAY LEFT TURN

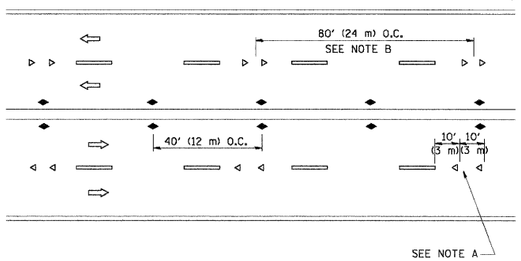

MULTI-LANE/UNDIVIDED

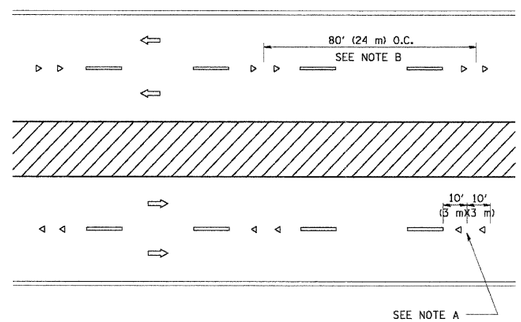

MULTI-LANE/DIVIDED

GENERAL NOTES

1. MARKERS USED WITH DASHED LINES SHALL BE CENTERED IN THE GAP BETWEEN SEGMENTS.
2. MARKERS USED ADJACENT TO SOLID LINES SHALL BE OFFSET 2 TO 3 (50 TO 75) TOWARD TRAFFIC AS SHOWN.
3. MARKERS THROUGH TANGENTS LESS THAN 500' (150 m) IN LENGTH BETWEEN CURVES SHALL BE INSTALLED AT THE LESSER OF THE TWO CURVE SPACINGS.

SYMBOLS

- YELLOW STRIPE
- WHITE STRIPE
- ONE-WAY AMBER MARKER
- ONE-WAY CRYSTAL MARKER (W/O)
- TWO-WAY AMBER MARKER

LANE MARKER NOTES

A. USE DOUBLE LANE LINE MARKERS SPACED AS SHOWN.

B. REDUCE TO 40' (12 m) O.C. ON CURVES WHERE ADVISORY SPEEDS ARE 10 M.P.H (20 km/h) LOWER THAN POSTED SPEEDS.

DESIGN NOTES

1. DOUBLE LANE LINE MARKERS SHALL BE USED UNLESS SPECIFIED OTHERWISE.
2. EXCEPT AS SHOWN ON THE LANE REDUCTION TRANSITION AND FREEWAY EXIT RAMP DETAIL, MARKERS ARE NOT TO BE SPECIFIED ON RIGHT EDGE LINES.
3. THE EXACT MARKER LIMITS, SPACING, AND COLOR SHOULD BE INCLUDED IN THE PLANS.
4. MARKERS SHOULD NOT BE USED ALONGSIDE CURBS EXCEPT FOR EXTREMELY SHORT SECTIONS OF CURBS WHERE NOT MORE THAN TWO MARKERS WOULD BE INVOLVED.

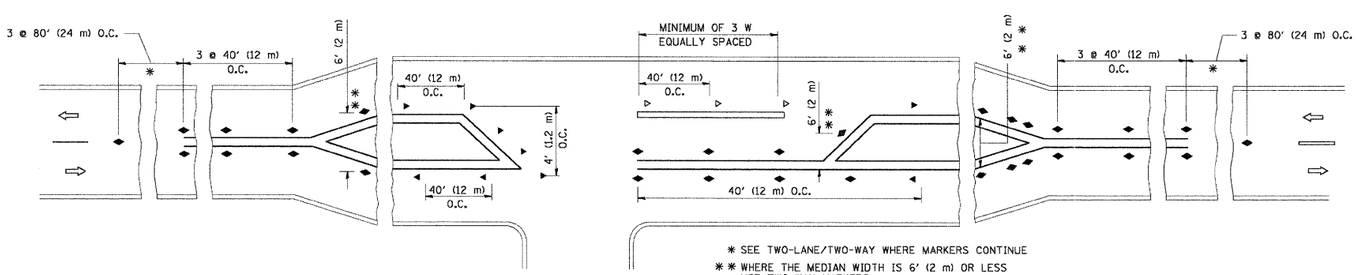

* SEE TWO-LANE/TWO-WAY WHERE MARKERS CONTINUE

** WHERE THE MEDIAN WIDTH IS 6' (2 m) OR LESS USE TWO-WAY MARKERS.

LEFT TURN

All dimensions are in inches (millimeters) unless otherwise shown.

FILE NAME = c:\pw_work\pwidot\drivakosgn\d0108315\tc11.dgn	USER NAME = drivakosgn	DESIGNED -	REVISED - T. RAMMACHER 09-19-94	STATE OF ILLINOIS DEPARTMENT OF TRANSPORTATION
		DRAWN -	REVISED - T. RAMMACHER 03-12-99	
	PLOT SCALE = 50.000 ' / IN.	CHECKED -	REVISED - T. RAMMACHER 01-06-00	
	PLOT DATE = 9/9/2009	DATE -	REVISED - C. JUCIUS 09-09-09	

TYPICAL APPLICATIONS

RAISED REFLECTIVE PAVEMENT MARKERS (SNOW-PLOW RESISTANT)

SCALE: NONE | SHEET NO. 1 OF 1 SHEETS | STA. | TO STA.

F.A.U. RTE.	SECTION	COUNTY	TOTAL SHEETS	SHEET NO.
2760	100-B-1	COOK	28	26

TC-11 CONTRACT NO. 60M80

FED. ROAD DIST. NO. 1 | ILLINOIS | FED. AID PROJECT

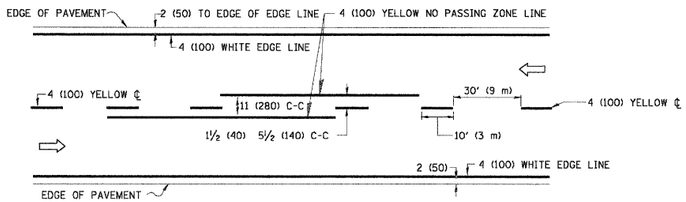

2-LANE ROADWAY

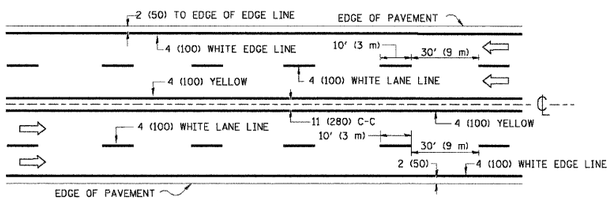

MULTI-LANE UNDIVIDED

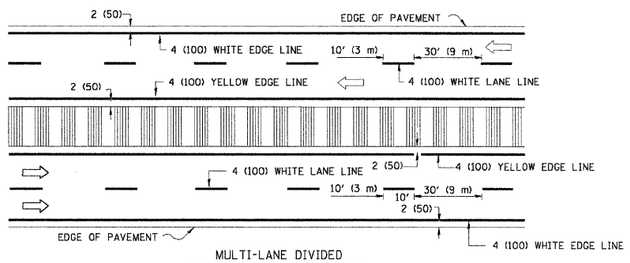

MULTI-LANE DIVIDED
WITH MOUNTABLE MEDIAN

NOTE: MEDIANS WITH BARRIER CURB DO NOT REQUIRE AN EDGE LINE

TYPICAL LANE AND EDGE LINE MARKING

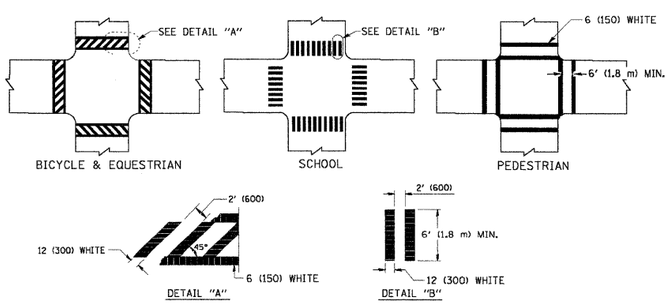

TYPICAL CROSSWALK MARKING

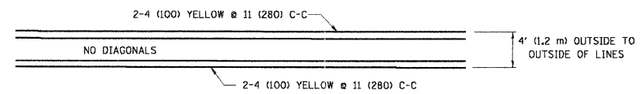

4' (1.2 m) WIDE MEDIANS ONLY

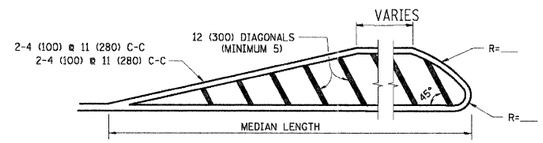

FOR MEDIAN LENGTHS WHERE DIAGONAL SPACING CANNOT BE ATTAINED, USE 5 (FIVE) EQUALLY SPACED DIAGONAL LINES.

DIAGONAL LINE SPACING: 50' (15 m) C-C (LESS THAN 30MPH (50 km/h))
75' (25 m) C-C 30MPH (50 km/h) TO 45MPH (70 km/h))
150' (45 m) C-C (MORE THAN 45MPH (70 km/h))

MEDIANS OVER 4' (1.2 m) WIDE

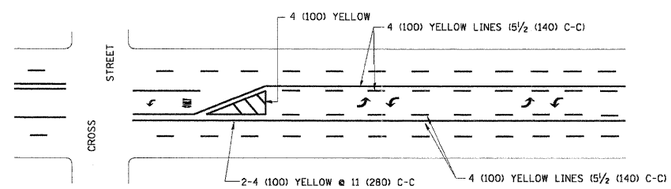

A MINIMUM OF TWO PAIRS OF TURN ARROWS SHALL BE USED, WHITE IN COLOR. ADDITIONAL PAIRS SHALL BE PLACED AT 200' (60 m) TO 300' (90 m) INTERVALS.

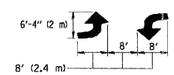

MEDIAN WITH TWO-WAY LEFT TURN LANE

TYPICAL PAINTED MEDIAN MARKING

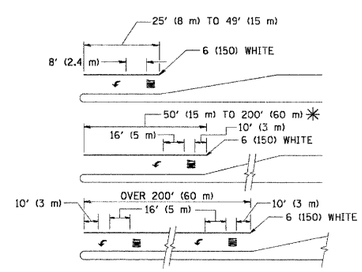

FULL SIZE LETTERS 8' (2.4 m) AND ARROWS SHALL BE USED.
↰ AREA = 15.6 SQ. FT. (1.5 m²) ONLY AREA = 20.8 SQ. FT. (1.9 m²)

✳ TURN LANES IN EXCESS OF 400' (120 m) IN LENGTH MAY HAVE AN ADDITIONAL SET OF ARROW - "ONLY" INSTALLED MIDWAY BETWEEN THE OTHER TWO SETS OF ARROW - "ONLY".

TYPICAL LEFT (OR RIGHT) TURN LANE

TYPICAL TURN LANE MARKING

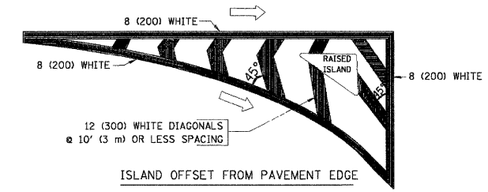

ISLAND OFFSET FROM PAVEMENT EDGE

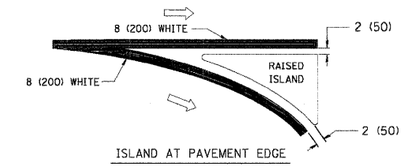

ISLAND AT PAVEMENT EDGE

TYPICAL ISLAND MARKING

TYPE OF MARKING	WIDTH OF LINE	PATTERN	COLOR	SPACING / REMARKS
CENTERLINE ON 2 LANE PAVEMENT	4 (100)	SKIP-DASH	YELLOW	10' (3 m) LINE WITH 30' (9 m) SPACE
CENTERLINE ON MULTI-LANE UNDIVIDED PAVEMENT	2 @ 4 (100)	SOLID	YELLOW	11 (280) C-C
NO PASSING ZONE LINES: FOR ONE DIRECTION FOR BOTH DIRECTIONS	4 (100) 2 @ 4 (100)	SOLID SOLID	YELLOW YELLOW	5½ (140) C-C FROM SKIP-DASH CENTERLINE 11 (280) C-C OMIT SKIP-DASH CENTERLINE BETWEEN
LANE LINES	4 (100) 5 (125) ON FREEWAYS	SKIP-DASH SKIP-DASH	WHITE WHITE	10' (3 m) LINE WITH 30' (9 m) SPACE
DOTTED LINES (EXTENSIONS OF CENTER, LANE OR TURN LANE MARKINGS)	SAME AS LINE BEING EXTENDED	SKIP-DASH	SAME AS LINE BEING EXTENDED	2' (600) LINE WITH 6' (1.8 m) SPACE
EDGE LINES	4 (100)	SOLID	YELLOW-LEFT WHITE-RIGHT	OUTLINE MOUNTABLE MEDIANS IN YELLOW; EDGE LINES ARE NOT USED NEXT TO BARRIER CURB
TURN LANE MARKINGS	6 (150) LINE; FULL SIZE LETTERS & SYMBOLS (8' (2.4m))	SOLID	WHITE	SEE TYPICAL TURN LANE MARKING DETAIL
TWO WAY LEFT TURN MARKING	2 @ 4 (100) EACH DIRECTION 8' (2.4m) LEFT ARROW	SKIP-DASH AND SOLID IN PAIRS	YELLOW WHITE	10' (3 m) LINE WITH 30' (9 m) SPACE FOR SKIP-DASH; 5½ (140) C-C BETWEEN SOLID LINE AND SKIP-DASH LINE SEE TYPICAL TWO-WAY LEFT TURN MARKING DETAIL
CROSSWALK LINES (PEDESTRIAN) A. DIAGONALS (BIKE & EQUESTRIAN) B. LONGITUDINAL BARS (SCHOOL)	2 @ 6 (150) 12 (300) @ 45° 12 (300) @ 90°	SOLID SOLID SOLID	WHITE WHITE WHITE	NOT LESS THAN 6' (1.8 m) APART 2' (600) APART 2' (600) APART SEE TYPICAL CROSSWALK MARKING DETAILS.
STOP LINES	24 (600)	SOLID	WHITE	PLACE 4' (1.2 m) IN ADVANCE OF AND PARALLEL TO CROSSWALK, IF PRESENT. OTHERWISE, PLACE AT DESIRED STOPPING POINT. PARALLEL TO CROSSROAD CENTERLINE, WHERE POSSIBLE
PAINTED MEDIANS	2 @ 4 (100) WITH 12 (300) DIAGONALS @ 45° NO DIAGONALS USED FOR 4' (1.2 m) WIDE MEDIANS	SOLID	YELLOW: TWO WAY TRAFFIC WHITE: ONE WAY TRAFFIC	11 (280) C-C FOR THE DOUBLE LINE SEE TYPICAL PAINTED MEDIAN MARKING.
GORE MARKING AND CHANNELIZING LINES	8 (200) WITH 12 (300) DIAGONALS @ 45°	SOLID	WHITE	DIAGONALS: 15' (4.5 m) C-C (LESS THAN 30MPH (50 km/h)) 20' (6 m) C-C 30MPH (50 km/h) TO 45MPH (70 km/h)) 30' (9 m) C-C (OVER 45MPH (70 km/h))
RAILROAD CROSSING	24 (600) TRANSVERSE LINES; "RR" IS 6' (1.8 m) LETTERS; 16 (400) LINE FOR "X"	SOLID	WHITE	SEE STATE STANDARD 780001 AREA OF: "R"=3.6 SQ. FT. (0.33 m²) EACH "X"=54.0 SQ. FT. (5.0 m²)
SHOULDER DIAGONALS	12 (300) @ 45°	SOLID	WHITE - RIGHT YELLOW - LEFT	50' (15 m) C-C (LESS THAN 30MPH (50 km/h)) 75' (25 m) C-C (30 MPH (50 km/h) TO 45MPH (70 km/h)) 150' (45 m) C-C (OVER 45MPH (70 km/h))

FOR FURTHER DETAILS ON PAVEMENT MARKING REFER TO STANDARD SPECIFICATIONS FOR ROAD AND BRIDGE CONSTRUCTION AND STATE STANDARD 780001.

All dimensions are in inches (millimeters) unless otherwise shown.

FILE NAME = c:\pw_work\pwidot\drivakosgn\d0128315\tc13.dgn	USER NAME = drivakosgn	DESIGNED - EVERS	REVISED -T. RAMMACHER 10-27-94
		DRAWN -	REVISED -C. JUCIUS 09-09-09
	PLOT SCALE = 50.000 ' / IN.	CHECKED -	REVISED -
	PLOT DATE = 9/9/2009	DATE - 03-19-90	REVISED -

STATE OF ILLINOIS
DEPARTMENT OF TRANSPORTATION

DISTRICT ONE
TYPICAL PAVEMENT MARKINGS

SCALE: NONE | SHEET NO. 1 OF 1 SHEETS | STA. | TO STA.

F.A.U. RTE.	SECTION	COUNTY	TOTAL SHEETS	SHEET NO.
2760	100-B-1	COOK	28	27
	TC-13	CONTRACT NO.60M80		

FED. ROAD DIST. NO. 1 | ILLINOIS | FED. AID PROJECT

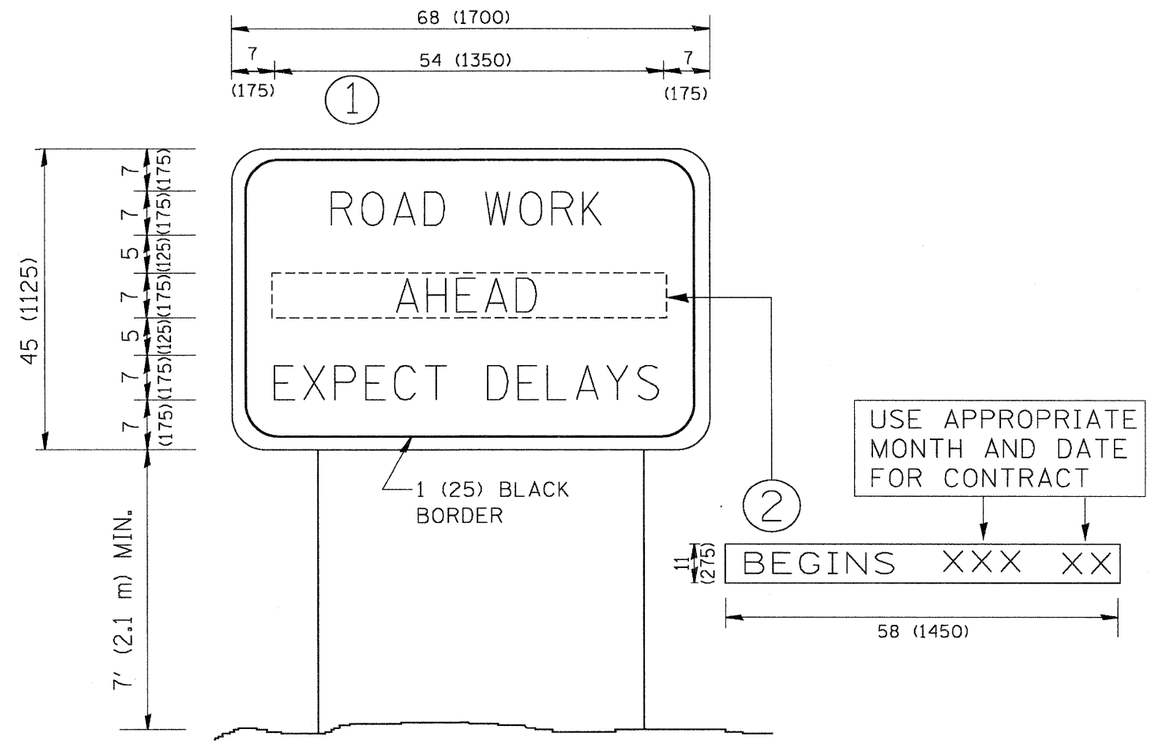

NOTES:

1. USE BLACK LETTERING ON ORANGE BACKGROUND.
2. ERECT SIGNS IN ADVANCE OF THE LOCATION FOR THE "ROAD CONSTRUCTION AHEAD" SIGN AT LOCATIONS AS DIRECTED BY THE ENGINEER.
3. ERECT SIGN 1 WITH INSTALLED PANEL 2 ONE WEEK PRIOR TO THE START OF CONSTRUCTION.
4. REMOVE PANEL 2 SOON AFTER THE START OF CONSTRUCTION.
5. SEE SPECIAL PROVISION FOR "TEMPORARY INFORMATION SIGNING" FOR ADDITIONAL INFORMATION.
6. ONE SIGN ASSEMBLY EQUALS 25.70 SQ. FT. (2.3 SQ. M.)
7. SHALL BE PAID FOR AS TEMPORARY INFORMATION SIGNING.

ALL DIMENSIONS ARE IN INCHES (MILLIMETERS) UNLESS OTHERWISE SHOWN.

FILE NAME = W:\diststd\22x34\to22.dgn	USER NAME = gaglianobt	DESIGNED -	REVISED - R. MIRS 09-15-97	STATE OF ILLINOIS DEPARTMENT OF TRANSPORTATION	ARTERIAL ROAD INFORMATION SIGN			F.A.U. RTE.	SECTION	COUNTY	TOTAL SHEETS / SHEET NO.
		DRAWN -	REVISED - R. MIRS 12-11-97					2760	100-B-1	COOK	28 / 28
	PLOT SCALE = 50.000 ' / IN.	CHECKED -	REVISED - T. RAMMACHER 02-02-99					TC-22		CONTRACT NO.60M80	
	PLOT DATE = 1/4/2008	DATE -	REVISED - C. JUCIUS 01-31-07		SCALE: NONE	SHEET NO. 1 OF 1 SHEETS	STA. TO STA.	FED. ROAD DIST. NO. 1	ILLINOIS	FED. AID PROJECT	