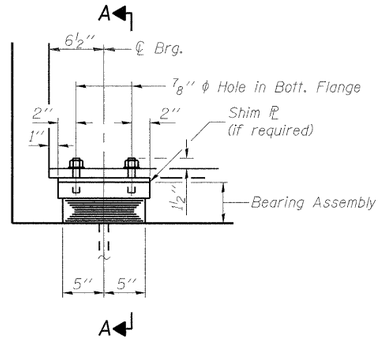

ELEVATION AT S. ABUT.

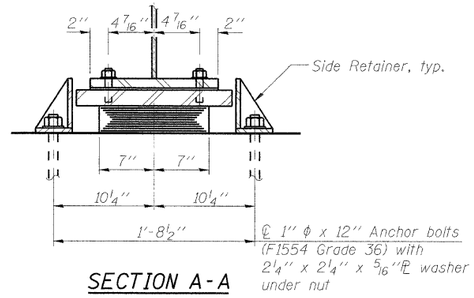

SECTION A-A

TYPE I ELASTOMERIC EXP. BRG.

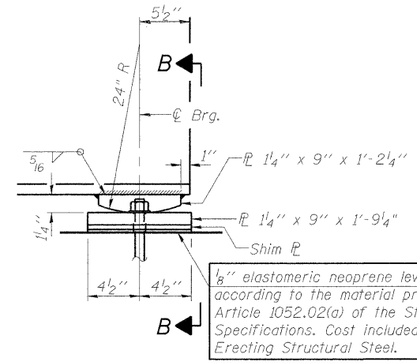

ELEVATION AT N. ABUT.

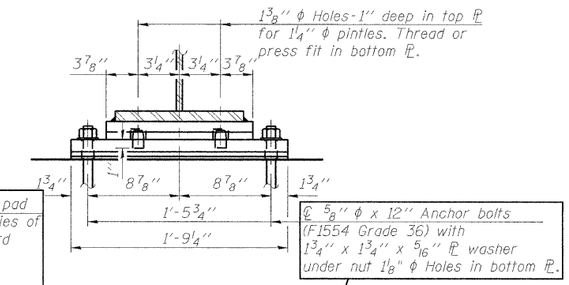

SECTION B-B

FIXED BEARING

For Information Only

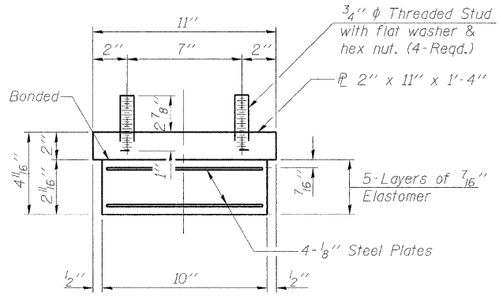

BEARING ASSEMBLY

Note:
Shim plates shall not be placed under Bearing Assembly.

Notes:
Anchor bolts shall be ASTM F1554 all-thread (or an Engineer-approved alternate material) of the grade(s) and diameter(s) specified. ASTM A307 Grade C anchor bolts may be used in lieu of ASTM F1554 Grade 36 (Fy=36ksi). The corresponding specified grade of AASHTO M314 anchor bolts may be used in lieu of ASTM F1554.

Anchor bolts at fixed bearings may be either cast in place or installed in holes drilled after the supported member is in place.

Anchor bolts for side retainers may be cast in place or installed in holes drilled before or after members are in place.

Drilled and set anchor bolts shall be installed according to Article 521.06 of the Standard Specifications.

Side retainers and other steel members required for the elastomeric bearing assembly shall be included in the cost of Furnishing Elastomeric Bearing Assembly, Type I.

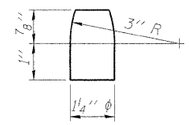

PINTLE

For Information Only

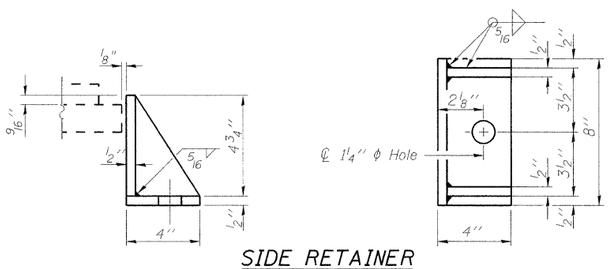

SIDE RETAINER

Equivalent rolled angle with stiffeners will be allowed in lieu of welded plates.

These plans are for the fabrication of the structural steel and bearings. All work shown that is not related to the fabrication is for information only. It is not included in this contract, and is identified as "Not Included in this Contract" or "For Information only"

BILL OF MATERIAL

Item	Unit	Total
Furnishing Elastomeric Bearing Assembly Type I	Each	12
Storage of Elastomeric Bearing Assemblies	Cal Day	120

I-2E-1 7-1-10

FILE NAME = g:\projects\210255.007\cadd\structure\sht\016060-60M52-013-Bearing.dgn

ENTRAN

USER NAME = 2sajerb	DESIGNED - BPS	REVISED -	
	CHECKED - BHS	REVISED -	
PLOT SCALE = N/A	DRAWN - BPS	REVISED -	
PLOT DATE = 10/15/2011	CHECKED - BHS	REVISED -	

STATE OF ILLINOIS
DEPARTMENT OF TRANSPORTATION

BEARING DETAILS
S.N. 016-0680
SHEET NO. S19 OF 29 SHEETS

F.A.U. RTE.	SECTION	COUNTY	TOTAL SHEETS	SHEET NO.
2692	2011-205-F	COOK	17	11
		CONTRACT NO. 60R35		
		ILLINOIS FED. AID PROJECT		