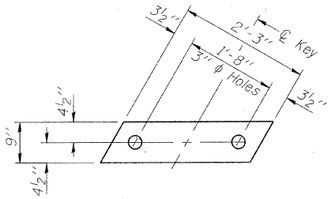

FABRIC BEARING PAD
(Interior - 16 Req'd.)

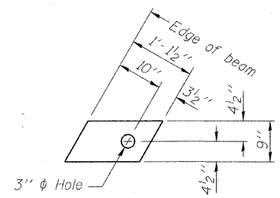

FABRIC BEARING PAD
(Exterior - 4 Req'd.)

FIXED

Notes:
All bearing pads shall be 1" thick.

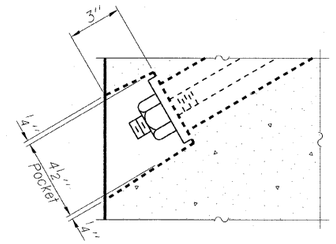

SECTION A-A

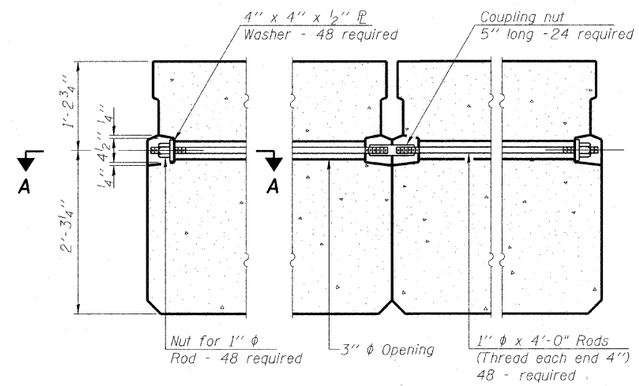

TYPICAL TRANSVERSE TIE ASSEMBLY

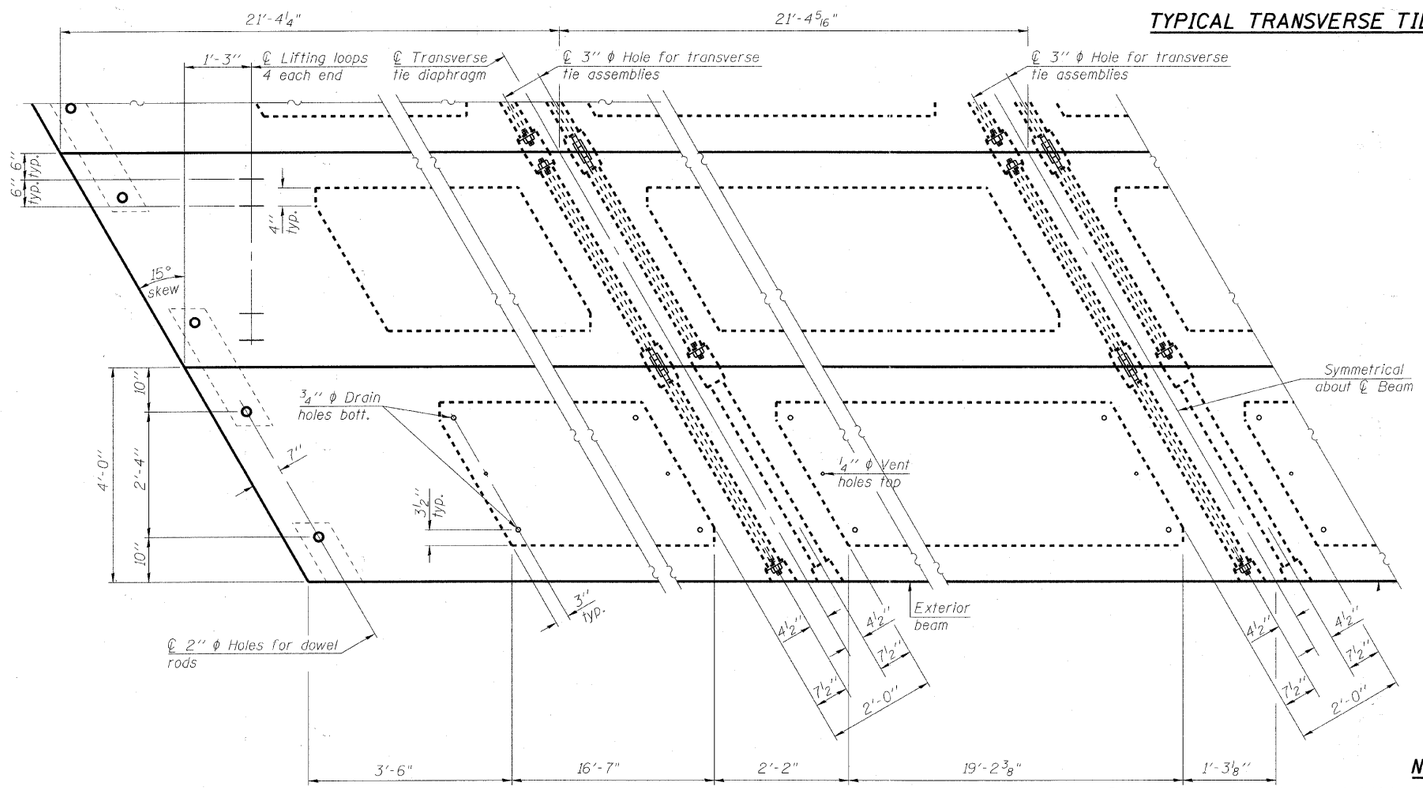

PLAN VIEW

Note: Connect beams in pairs with the transverse tie configuration shown.

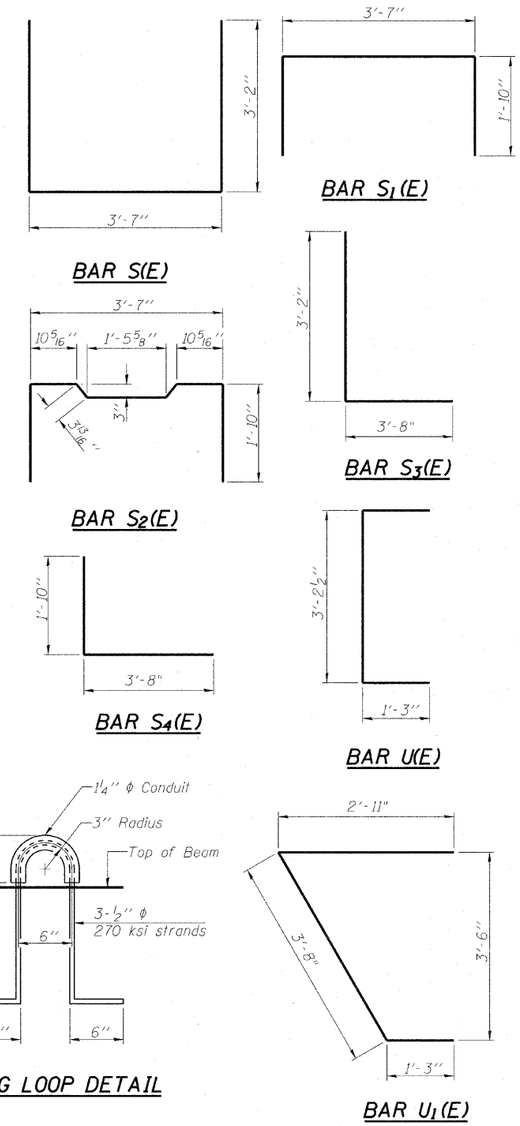

NOTES

Prestressing steel shall be uncoated high strength, low relaxation 7-wire strand, Grade 270. The nominal diameter shall be ½" and the nominal cross sectional area shall be 0.153 sq. in.

The 1" ϕ rods in the transverse tie assembly shall be tightened to a snug fit and the threads set. Pockets on exterior faces of bridge shall be filled with grout after transverse tie assembly is in place.

Reinforcement bars shall conform to ASTM A 706, Grade 60. (See Special Provisions).

Two ⅛" fabric adjusting shims of the dimensions of the exterior bearing pad shall be provided for each bearing pad location.

A minimum 2½" ϕ lifting pin shall be used to engage the lifting loops during handling.

Corrosion Inhibitor, per Article 1020.05(b)(12) and 1021.06 of the Standard Specifications, shall be used in the concrete for precast prestressed concrete deck beams.

Compressive strength of prestressed concrete, f'c, shall be 6000 psi.

Compressive strength of prestressed concrete at release, f'ci, shall be 5000 psi.

BILL OF MATERIAL

Precast Prestressed Conc. Deck Bms. (42" depth)	Sq. Ft.	3,075

COPYRIGHT © 2010, BY BAXTER & WOODMAN, INC.
STATE OF ILLINOIS - PROFESSIONAL DESIGN FIRM
LICENSE NO. - 184-001121 EXPIRES 4/30/2011
DGN FILE ...\pictrdriver\PW22x34.pltcfg
...\PM210Cref Mod1(10)24h.tbl
...\Mode\cross-section\0056-3183 graf road bridges\cndd-survey\drawings\dcns\cross west\bridges\Superstructure.dgn

BAXTER WOODMAN Consulting Engineers	USER NAME =	DESIGNED - BLB	REVISED - 12/30/10 PER MCDOT	MCHENRY COUNTY DIVISION OF TRANSPORTATION GRAF ROAD BRIDGE OVER WEST BRANCH PISCASAW CREEK	42" x 48" PPC DECK BEAM DETAILS STRUCTURE NO. 056-3183
		CHECKED - BAB	REVISED -		
	PLOT SCALE =	DRAWN - BCD	REVISED -		
	PLOT DATE =	DATE - 10/08/10	REVISED -		SHEET NO. 4 OF 18 SHEETS

TR RTE.	SECTION	COUNTY	TOTAL SHEETS	SHEET NO.
0037	06-00322-01-BR	MCHENRY	52	27
	C-91-258-11	CONTRACT NO. 63580		
FED. ROAD DIST. NO. 1	ILLINOIS	FED. AID PROJECT	BROS-0111(064)	