Notes:

See sheet 7 of 18 for Detail A and View B-B.
Approach slab and parapet concrete shall be paid for as Concrete Superstructure.
Approach footing concrete shall be paid for as Concrete Structures.
Reinforcement shall be paid for as Reinforcement Bars, Epoxy Coated.
For $v_1(E)$ bar details, see sheet 13 of 18.
The approach footing maximum applied service bearing pressure (Qmax) = 2.0 ksf.
Cost of excavation for approach footing included with Concrete Structures.
For Porous Granular Embankment (Special) and drainage treatment details, see sheet 2 of 18.
For additional railing details, see sheet 11 of 18.

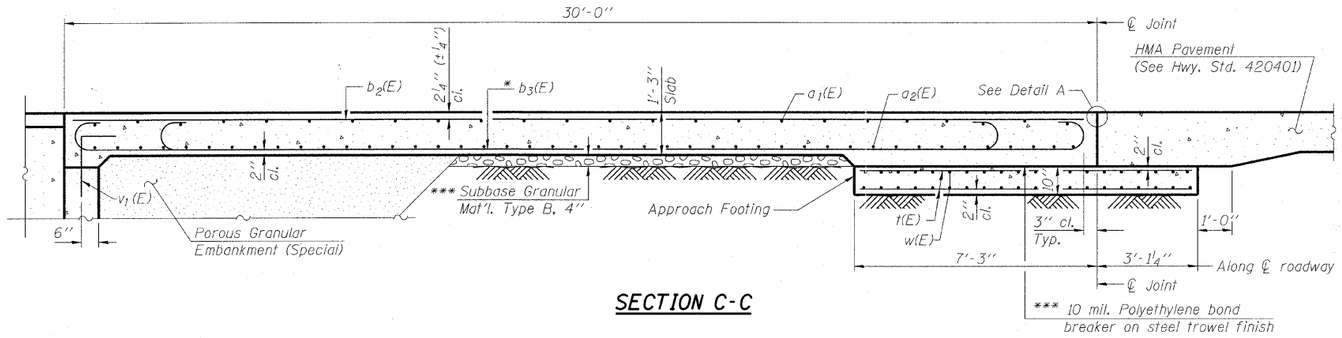

SECTION C-C

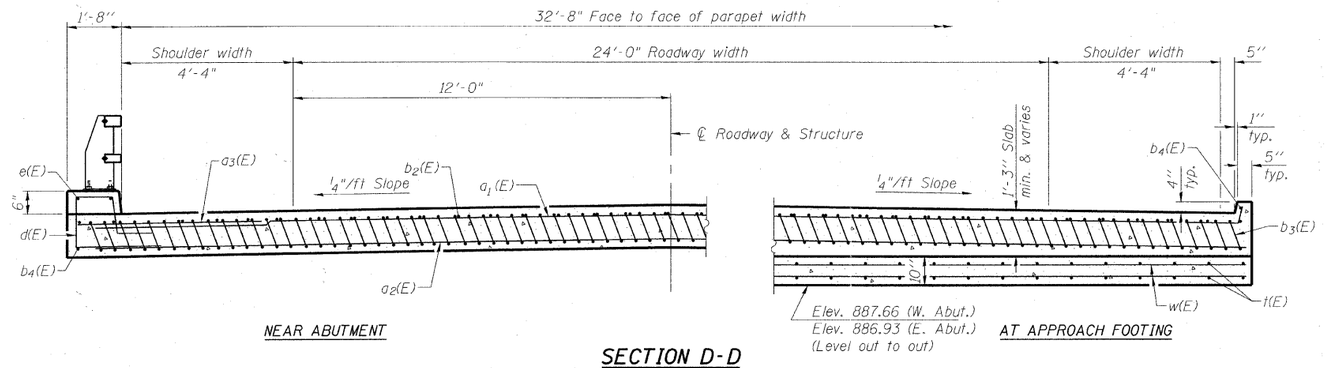

NEAR ABUTMENT

AT APPROACH FOOTING

SECTION D-D

(See Plan for dimensions not shown)

* Tilt #9 $b_3(E)$ bars as required to maintain clearance.

*** Cost included with Concrete Superstructure.

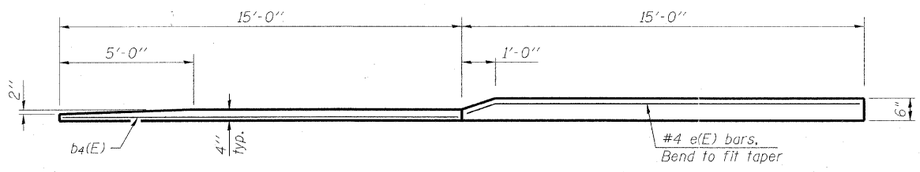

VIEW E-E

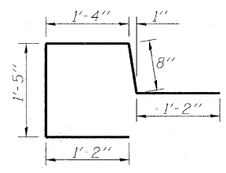

BAR d(E)

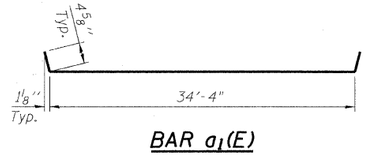

BAR $a_1(E)$

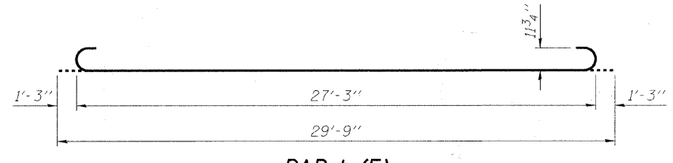

BAR $b_3(E)$

TWO APPROACHES BILL OF MATERIAL

Bar	No.	Size	Length	Shape
$a_1(E)$	50	#4	35'-1"	
$a_2(E)$	92	#5	34'-6"	
$a_3(E)$	48	#6	6'-6"	
$b_2(E)$	54	#4	29'-8"	
$b_3(E)$	160	#9	29'-9"	
$b_4(E)$	8	#4	15'-0"	
d(E)	84	#5	5'-9"	
e(E)	8	#4	14'-9"	
t(E)	136	#4	9'-8"	
w(E)	80	#5	34'-6"	
Concrete Superstructure			Cu. Yd.	103.0
Concrete Structures			Cu. Yd.	21.5
Reinforcement Bars, Epoxy Coated			Pound	26630
Bridge Deck Grooving			Sq. Yd.	203
Protective Coat			Sq. Yd.	238

(Sheet 2 of 2)

COPYRIGHT © 2010, BY BAXTER & WOODMAN, INC.
STATE OF ILLINOIS - PROFESSIONAL DESIGN FIRM
LICENSE NO. - 184-001211 EXPIRES 4/30/2011
BAXTER & WOODMAN CONSULTING ENGINEERS

USER NAME =	DESIGNED - BLB	REVISED - 12/30/10 PER MCDOT
	CHECKED - BAB	REVISED -
PLOT SCALE =	DRAWN - BCD	REVISED -
PLOT DATE =	DATE - 10/08/10	REVISED -

MCHENRY COUNTY DIVISION OF TRANSPORTATION
GRAF ROAD BRIDGE OVER
WEST BRANCH PISCASAW CREEK

BRIDGE APPROACH SLAB DETAILS
STRUCTURE NO. 056-3183

SHEET NO. 8 OF 18 SHEETS

TR RTE.	SECTION	COUNTY	TOTAL SHEETS	SHEET NO.
0037	06-00322-01-BR	MCHENRY	52	31
	C-91-258-11	CONTRACT NO. 63580		
FED. ROAD DIST. NO. 1	ILLINOIS	FED. AID PROJECT	BROS-0111(064)	