* Cast top of wingwall flush with exterior beam face after beams have been erected.

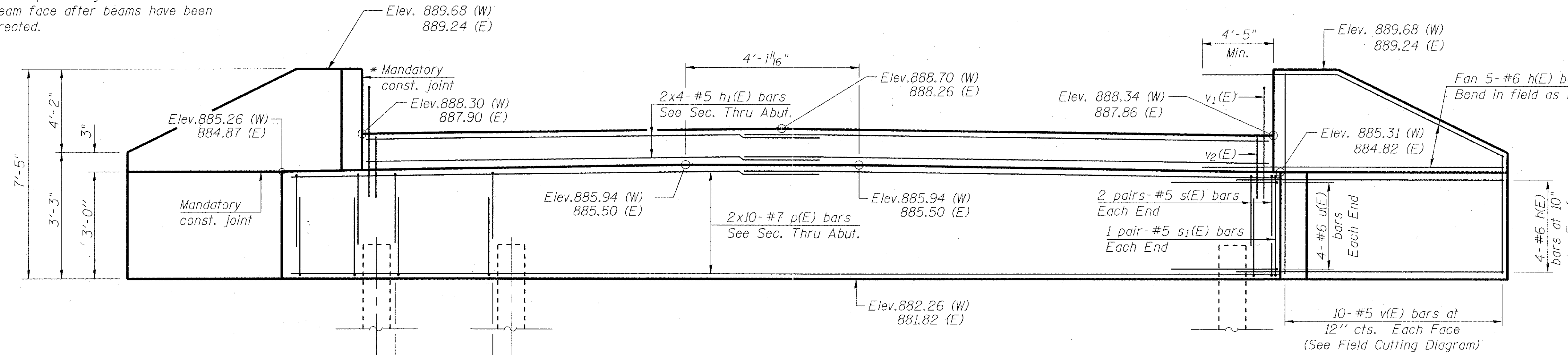

ELEVATION

LEGEND

(W) - West Abutment
(E) - East Abutment

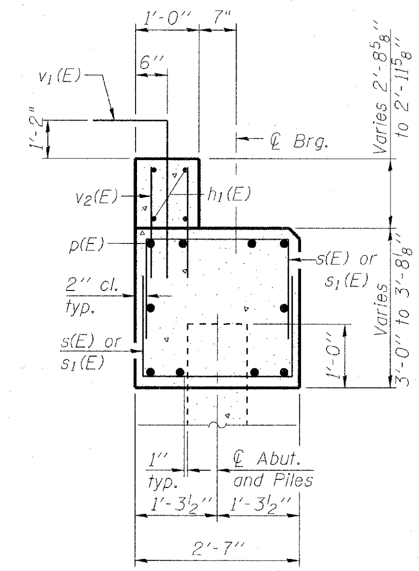

SECTION A-A

Horiz. Dim. @ Rt. L's

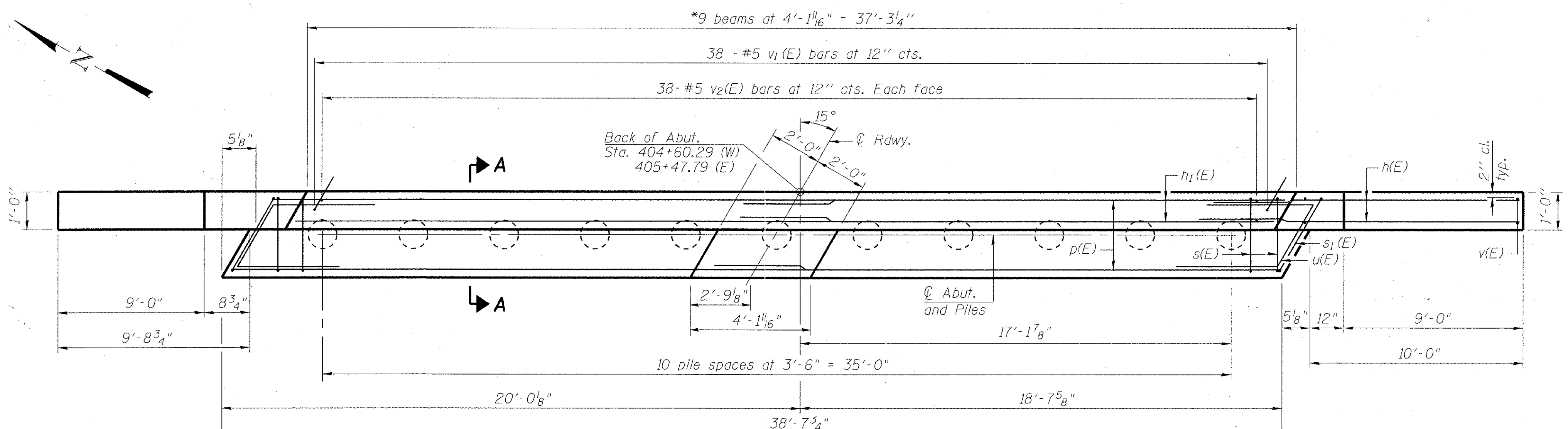

PLAN

East Abutment shown.
West Abutment similar by rotation.

BILL OF MATERIAL
TWO ABUTMENTS

Bar	No.	Size	Length	Shape
h(E)	72	#6	14'-5"	——
h1(E)	16	#5	20'-3"	——
p(E)	40	#7	22'-1"	——
s(E)	136	#5	7'-3"	⊓
s1(E)	8	#5	7'-4"	⊓
u(E)	16	#6	11'-2"	⌐
v(E)	40	#5	8'-1"	——
v1(E)	76	#5	6'-8"	⌐
v2(E)	152	#5	4'-4"	——
Structure Excavation			Cu. Yd.	240
Concrete Structures			Cu. Yd.	33.2
Reinforcement Bars, Epoxy Coated			Pound	6620
Furnishing Metal Shell Piles, 14" x 0.312"			Foot	880
Driving Piles			Foot	880
Test Pile Metal Shells			Each	2
Pile Shoes			Each	22

Notes:

For details of piles and Concrete Encasement, see sheet 14 of 18.

Cast backwall after beams and concrete wearing surface have been erected.

PILE DATA

EAST ABUTMENT

Type: 14" ϕ Metal Shells w/ 0.312" walls with Pile Shoes
Nominal Required Bearing: 360 kips
Factored Resistance Available: 180 kips
Est. Length: 40'
No. Production Piles: 10
No. Test Piles: 1

WEST ABUTMENT

Type: 14" ϕ Metal Shells w/ 0.312" walls with Pile Shoes
Nominal Required Bearing: 360 kips
Factored Resistance Available: 180 kips
Est. Length: 48'
No. Production Piles: 10
No. Test Piles: 1

The Contractor shall drive a total of (two) 2 Test Piles in a permanent location, one at each abutment as directed by the Engineer, before ordering the remainder of piles.

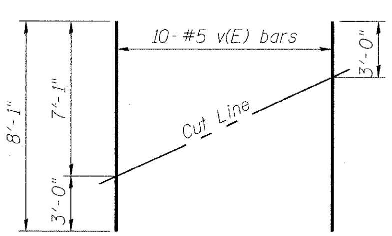

FIELD CUTTING DIAGRAM

Order v(E) full length. Cut as shown and use remainder of bars in opposite face.

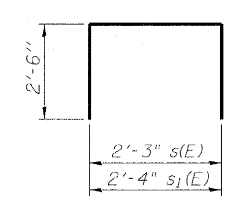

BAR s(E) & s1(E)

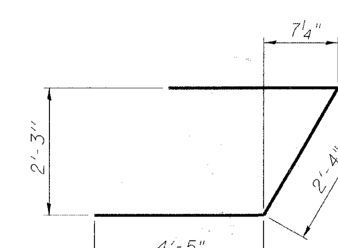

BAR u(E)

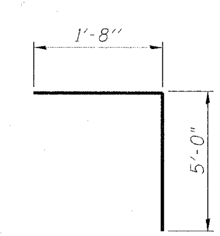

BAR v1(E)

COPYRIGHT © 2010, BY BAXTER & WOODMAN, INC.
STATE OF ILLINOIS - PROFESSIONAL DESIGN FIRM
LICENSE NO. - 184-001121 - EXPIRES 4/30/2011
566bcd 8/11/2011 9:24:07 AM
...\plotdriver\PDF22x34.plt
...\PH2\Graf West\071224W.tbl
i:\mokena\mccdh\071224- graf road bridges\cadd-survey\drawings\dgns\graf west\bridges\Substructure.dgn

BAXTER & WOODMAN Consulting Engineers	USER NAME =	DESIGNED - BLB	REVISED - 12/30/10 PER MCDOT
		CHECKED - BAB	REVISED -
	PLOT SCALE =	DRAWN - BCD	REVISED -
	PLOT DATE =	DATE - 10/08/10	REVISED -

MCHENRY COUNTY DIVISION OF TRANSPORTATION
GRAF ROAD BRIDGE OVER
WEST BRANCH PISCASAW CREEK

ABUTMENTS
STRUCTURE NO. 056-3183
SHEET NO. 13 OF 18 SHEETS

TR RTE.	SECTION	COUNTY	TOTAL SHEETS	SHEET NO.
0037	06-00322-01-BR	MCHENRY	52	36
	C-91-258-11	CONTRACT NO. 63580		
FED. ROAD DIST. NO. 1	ILLINOIS	FED. AID PROJECT	BROS-0111(064)	