11-18-11 LETTING ITEM 021

F.A.P. RTE.	SECTION	COUNTY	TOTAL SHEETS	SHEET NO.
361	06-00214-11-LS	KANE	54	1
FED. ROAD DIST. NO.	ILLINOIS	CONTRACT NO. 63638		

STATE OF ILLINOIS
DEPARTMENT OF TRANSPORTATION
DIVISION OF HIGHWAYS

PLANS FOR PROPOSED FEDERAL AID HIGHWAY

F.A.P. 361 (STEARNS ROAD STAGE 2A)
MCLEAN BLVD ENVIRONMENTAL ADAPTIVE MANAGEMENT PLANS
SECTION 06-00214-11-LS
PROJECT HPP-1527(036)
KANE COUNTY
C-91-188-11

FOR INDEX OF SHEETS, SEE SHEET NO. 2

PROJECT LOCATED IN VILLAGE OF SOUTH ELGIN

TRAFFIC DATA

TRAFFIC ADT: N/A
DESIGN SPEED: N/A

DESIGN DESIGNATION:
OFF SYSTEM

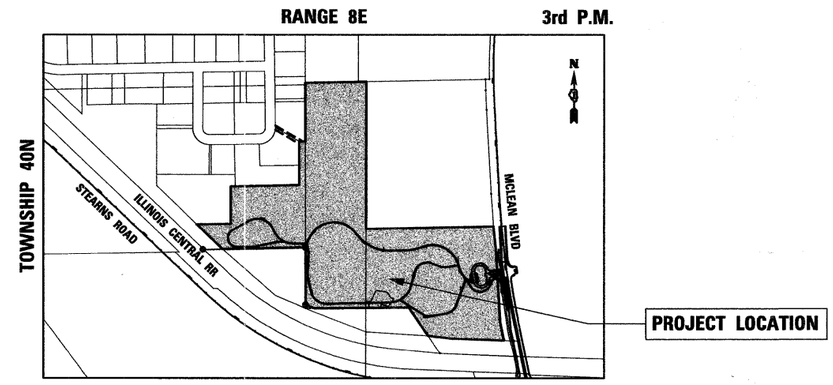

ST. CHARLES TOWNSHIP
GROSS LENGTH = 9252 FT (1.752 MILE)
NET LENGTH = 9352 FT (1.771 MILE)
PROJECT LOCATED IN:
PART OF SECTIONS 3 AND 4 IN TOWNSHIP 40N, RANGE 8E, OF THE THIRD PRINCIPAL MERIDIAN, KANE COUNTY, ILLINOIS

LOCATION OF SECTION INDICATED THUS:-

STATE OF ILLINOIS
DEPARTMENT OF TRANSPORTATION
DIVISION OF HIGHWAYS

APPROVED AUGUST 23, 2011
KANE COUNTY DIVISION OF TRANSPORTATION, COUNTY ENGINEER

PASSED SEPTEMBER 7, 2011
CHRISTOPHER HOLT
DISTRICT 1 ENGINEER OF LOCAL ROADS & STREETS

RELEASING FOR BID BASED ON LIMITED REVIEW SEPTEMBER 7, 2011
Diane M. O'Keefe
DEPUTY DIRECTOR OF HIGHWAYS, REGION 1 ENGINEER

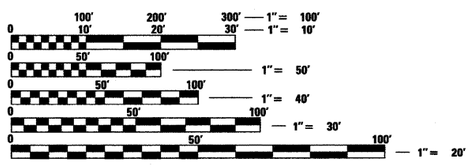

FULL SIZE PLANS HAVE BEEN PREPARED USING STANDARD ENGINEERING SCALES. REDUCED SIZED PLANS WILL NOT CONFORM TO STANDARD SCALES. IN MAKING MEASUREMENTS ON REDUCED PLANS, THE ABOVE SCALES MAY BE USED.

J.U.L.I.E.
JOINT UTILITY LOCATION INFORMATION FOR EXCAVATION
1-800-892-0123
OR 811

CONTRACT NO. 63638

RICHARD J. YOUNG 062-045713 LICENSED PROFESSIONAL ENGINEER OF ILLINOIS

August 26, 2011
RICHARD J. YOUNG
ILLINOIS REG. PROFESSIONAL ENGINEER NO. 062-045713
EXPIRATION DATE 11-30-2011

LICENSED STRUCTURAL ENGINEER GERALD E. KOYLASS 081-005264 STATE OF ILLINOIS

August 26, 2011
GERALD E. KOYLASS
ILLINOIS REG. STRUCTURAL ENGINEER NO. 081-005264
EXPIRATION DATE 11-30-2011

PAUL J. FITZPATRICK 062-047637 LICENSED PROFESSIONAL ENGINEER STATE OF ILLINOIS

August 26, 2011
PAUL J. FITZPATRICK
ILLINOIS REG. PROFESSIONAL ENGINEER NO. 062-047637
EXPIRATION DATE 11-30-2011

WILLS BURKE KELSEY ASSOCIATES LTD.
116 West Main Street, Suite 201
St. Charles, Illinois 60174
(630) 443-7755

McDonough Associates Inc.
Engineers / Architects
130 East Randolph Street
Chicago, Illinois 60601
(312) 946-8600

PRINTED BY THE AUTHORITY OF THE STATE OF ILLINOIS

PROGRAM AND OFFICE ENGINEER: CHARLES F. RIDDLE, P.E. (847) 705-4406 SCHAUMBURG, IL

GENERAL NOTES

1. ALL CONSTRUCTION SHALL BE IN CONFORMANCE WITH THE APPLICABLE REQUIREMENT SET FORTH IN "THE CONSTRUCTION SPECIFICATIONS FOR ROAD AND BRIDGE CONSTRUCTION" ADOPTED JANUARY 1, 2007 THEREINAFTER REFERRED TO AS STANDARD SPECIFICATIONS, THE LATEST EDITION OF THE "ILLINOIS MANUAL ON UNIFORM MANUAL TRAFFIC CONTROL DEVICES FOR STREETS AND HIGHWAYS" IN EFFECT ON THE DATE OF INVITATION FOR BIDS; THE "SUPPLEMENTAL SPECIFICATIONS AND RECURRING SPECIAL PROVISIONS" LATEST EDITION; INTERIM SPECIAL PROVISIONS AS INCLUDED IN THE CONTRACT DOCUMENTS; AND THE DETAILS AND STANDARDS CONTAINED IN THESE PLANS.

2. BEFORE STARTING ANY EXCAVATIONS, THE CONTRACTOR SHALL CALL "JULIE" AT 1-800-892-0123 FOR FIELD LOCATIONS OF BURIED ELECTRIC, TELEPHONE AND GAS FACILITIES. (48 HOUR NOTIFICATION IS REQUIRED)

3. THE LOCATIONS OF THE EXISTING UTILITIES, AS SHOWN ON THE DRAWINGS, REPRESENT DATA RECEIVED FROM VARIOUS SOURCES, IT IS NOT GUARANTEED TO BE CORRECT OR ALL INCLUSIVE. THE CONTRACTOR SHALL CONDUCT HIS OWN INVESTIGATIONS INTO THE LOCATION, SIZE, DEPTH, AND NATURE OF ANY AND ALL EXISTING UTILITIES WHICH MAY INTERFERE WITH THE WORK UNDER THIS CONTRACT. ANY EXISTING UTILITIES WHICH ARE TO REMAIN IN SERVICE SHALL BE FULLY PROTECTED BY THE CONTRACTOR AND ANY DAMAGE CAUSED BY THE CONSTRUCTION SHALL BE IMMEDIATELY REPAIRED AT NO ADDITIONAL COST IN ACCORDANCE WITH ARTICLE 105.07.

4. THE CONTRACTOR SHALL COORDINATE CONSTRUCTION ACTIVITIES WITH UTILITY COMPANIES.

5. ALL WORK SHALL BE COMPLETED WITHIN THE LIMITS OF THE PROJECT SHOWN. NO EQUIPMENT, MATERIALS OR A YARD OR FIELD OFFICE SHALL BE SET UP OR STORED ON PUBLIC RIGHT-OF-WAY OR PRIVATE PROPERTY WITHOUT WRITTEN PERMISSION FROM THE ENGINEER.

6. THE CONTRACTOR WILL NOT BE ALLOWED TO PROCEED WITH ANY PLANTING WORK UNTIL ALL UTILITY OWNERS FIELD LOCATE THEIR FACILITIES WHICH MAY INTERFERE WITH CONSTRUCTION OPERATIONS. THE ACTUAL LOCATIONS OF PROPOSED LANDSCAPING WILL BE ADJUSTED IN THE FIELD TO AVOID UNDERGROUND AND OVERHEAD UTILITIES.

DRAINAGE NOTES

1. DURING CONSTRUCTION OPERATIONS ALL LOOSE MATERIAL DEPOSITED IN THE FLOW LINE OF DRAINAGE STRUCTURES, GUTTERS AND DITCHES THAT OBSTRUCTS THE NATURAL FLOW OF WATER SHALL BE REMOVED AT THE CLOSE OF EACH WORKING DAY AT THE CONCLUSION OF THE CONSTRUCTION OPERATIONS. ALL DRAINAGE STRUCTURES SHALL BE CLEANED AS NECESSARY TO INSURE THAT THEY ARE FREE FROM ALL DIRT AND DEBRIS PRIOR TO THE FINAL INSPECTION OF THE PROJECT. THIS WORK WILL NOT BE MEASURED SEPERATELY FOR PAYMENT, BUT SHALL BE CONSIDERED INCLUDED IN THE COST OF THE VARIOUS SEEDING ITEMS.

KANE-DUPAGE SOIL & WATER CONSERVATION DISTRICT NOTES

1. THE CONTRACTOR AND ENGINEER SHALL MEET WITH THE KANE-DUPAGE SOIL & WATER CONSERVATION DISTRICT TO COORDINATE ALL IN-STREAM WORK ACTIVITIES. CONTACT KANE-DUPAGE AT (630) 584-7961.

2. SEE ERSOION CONTROL PLAN SHEETS FOR ADDITONAL DETAILS, CONDITONS AND NOTES.

DAMAGE TO ROADWAY IMPROVEMENTS

THE CONTRACTOR SHALL EXERCISE CARE SO AS NOT TO DAMAGE ANY PORTION OF THE NEWLY CONSTRUCTED STEARNS ROAD IMPROVEMENTS WHEN COMPLETING THE LANDSCAPING WORK. ANY DAMAGE CAUSED BY THE CONTRACTORS OPERATIONS WILL BE CORRECTED AT THE CONTRACTOR'S COST.

WORK AREA ACCESS - CURBS

UNLESS OTHERWISE APPROVED BY THE ENGINEER, THE CONTRACTOR WILL NOT BE ALLOWED TO CLIMB THE CURB WITH HIS EQUIPMENT TO ACCESS THE WORK AREAS. IF ACCESS TO THE PROJECT AREA IS LIMITED AND THE ONLY AVAILBLE ACCESS IS TO CLIMB THE CURB, A RAMP SHALL BE CONSTRCUTED IN THE GUTTER LINE CONSISTING OF AN AGGREGATE PLACED ON FABRIC, COLD PATCH OR HMA PLACED ON PAVING PAPER, OR OTHER METHOD APPROVED BY THE ENGINEER. SO THAT THERE IS NO DIRECT CONTACT WITH THE CURB, THE RAMP SHALL BE MOUNDED SLIGHTILY OVER THE TOP OF THE CURB. THE RAMP SHALL BE CONSTRCUTED IN SUCH A MANNER NOT TO DAMAGE THE FINISHED SURFACE OF THE CURB AND GUTTER. TIMBERS OR CRIBBING WILL NOT BE ALLOWED.

ALL TEMPORARY RAMPS ARE REQUIRED TO BE REMOVED AT THE END OF EACH DAY'S OPERATION.

PROVIDING RAMPS OR OTHER ACCESS POINTS TO THE WORK AREAS WILL NOT BE MEASURED SEPERATELY FOR PAYMENT BUT SHALL BE CONSIDERED INCLUDED IN THE COST OF THE VARIOUS SEEDING ITEMS.

BURN PERMIT

THE CONTRACTOR WILL BE RESPONSIBLE FOR OBTAINING A BURN PERMIT FROM THE ILLINOIS ENVIRONMENTAL PROTECTION AGENCY. THE TYPE OF PERMIT NEEDED WILL BE FOR PRAIRIE AND ECOLOGICAL MANAGEMENT BURNS.

THE CONTRACTOR WILL BE RESPONSIBLE FOR OBTAINING ALL REQUIRED PERMITS AND AUTHORIZATIONS PRIOR TO COMMENCEMENT OF BURING. THE CONTRACTOR WILL ALSO BE RESPONSIBLE FOR ANY AND ALL NOTIFICATION REQUIREMENTS CONTAINED IN PERMITS AND AUTHORIZATIONS. THE CONTRACTOR WILL PROVIDE A COPY OF ALL PERMITS TO THE ENGINEER PRIOR TO COMMENCEMENT OF BURNING.

THE CONTACT INFORMATION FOR THE IEPA IS AS FOLLOWS:

STATE OF ILLINOIS
ENVIRONMENTAL PROTECTION AGENCY
DIVISION OF AIR POLLUTION CONTROL
P.O. BOX 19506
SPRINGFIELD, IL 62794-9506

LOCATIONS OF THE ROADWAY GEOMETRY AND ALIGNMENTS

THE LOCATION OF THE ROADWAY GEOMETRY AND ALIGNMENTS AS SHOWN ON THE DRAWINGS REPRESENT DATA RECEIVED FROM VARIOUS SOURCES, IT IS NOT GUARANTEED TO BE CORRECT OR ALL INCLUSIVE. THE CONTRACTOR SHALL CONDUCT HIS OWN INVESTIGATIONS INTO THE LOCATION AND NATURE OF ANY VARIATIONS TO THE WORK AREA WHICH MAY ALTER THE WORK UNDER THIS CONTRACT. THE CONTRACTOR WILL NOTIFY THE ENGINEER IMMEDIATELY OF ANY DEVIATION IN THE ALIGNMENT OR WORK AREAS.

MAINTENANCE OF TRAFFIC NOTES

CONTACTS

THE CONTRACTOR WILL BE REQUIRED TO COORDINATE ALL MAINTENANCE OF TRAFFIC OPERATIONS WITH THE ENGINEER AND KANE COUNTY DIVISION OF TRANSPORTATION. THE CONTACT INFORMATION FOR THE COUNTY IS:

DAVID BOESCH 630-845-7875

TRAFFIC CONDITIONS, ACCIDENTS AND OTHER UNFORESEEN EMERGENCY CONDITIONS MAY REQUIRE THE ENGINEER TO RESTRICT, MODIFY OR REMOVE LANE CLOSURES OR CHANNELIZATION SHOWN IN THE PLANS. THE CONTRACTOR SHALL RESPOND WITHIN 30 MINUTES OF THE TIME OF NOTIFICATION BY THE ENGINEER FOR THE MAINTENANCE OF TRAFFIC CONTROL DEVICES.

ALL TRAFFIC CONTROL DEVICES USED FOR THE MAINTENANCE OF TRAFFIC REQUIRED FOR THE PROJECT SHALL BE REFLECTORIZED PRIOR TO INSTALLATION AND CLEANED AS NECESSARY THROUGHOUT THE DURATION OF THE CONTRACT.

OFF-PEAK HOURS

THE DESIGNATED LANE CLOSURE PERIOD FOR CONSTRUCTION OPERATION, REQUIRING A LANE CLOSURE, WILL BE DURING THE "OFF-PEAK" HOURS DEFINED AS THE DAYTIME HOURS FROM 9:00 A.M. TO 3:00 P.M. MONDAY THROUGH FRIDAY. UNLESS OTHERWISE APPROVED BY THE ENGINEER.

WORK SCHEDULE INVOLVING LEGAL HOLIDAY WORK WILL FOLLOW THE REQUIREMENTS OF SECTION 107.09 OF THE STANDARD SPECIFICATIONS.

KEEPING ROADS OPEN TO TRAFFIC - LIMITATIONS OF CONSTRUCTION

THE CONTRACTOR SHALL COORDINATE THE ITEMS OF WORK TO KEEP HAZARDS AND TRAFFIC INCONVENIENCES TO A MINIMUM, AS SPECIFIED BELOW:

1. OTHER THAN THE TIMES A LANE CLOSURE HAS BEEN APPROVED, CONSTRUCTION OPERATIONS WILL BE CONDUCTED SO ALL LANES ARE OPEN IN BOTH DIRECTIONS. ALL LANES OF TRAFFIC WILL BE OPEN REGARDLESS OF THE END OF EACH DAY'S WORK OPERATIONS.

2. THE CONTRACTOR SHALL PROVIDE, ERECT, AND MAINTAIN ALL THE NECESSARY SIGNS, BARRICADES, CONES, DRUMS, AND LIGHTS FOR THE WARNING AND PROTECTION OF TRAFFIC, AS REQUIRED BY THE APPLICABLE TRAFFIC CONTROL STANDARDS AND SECTIONS 107 AND 701 THROUGH 703 OF THE STANDARD SPECIFICATIONS.

3. THE CONTRACTOR SHALL FURNISH AND ERECT "ROAD CONSTRUCTION AHEAD" SIGNS (W20-1 (O)-48) AT BOTH ENDS OF THE PROJECT AND AT ALL SIDE ROADS WITHIN THE LIMITS OF THIS SECTION WHEN WORKING IN THE VICINITY OF THE SIDE ROAD INTERSECTION.

4. THE CONTRACTOR SHALL SCHEDULE HIS SEQUENCE OF OPERATIONS TO PERMIT THE CONSTRUCTION OF THIS PROJECT WITH THE LEAST INCONVENIENCE TO THE TRAVELING PUBLIC.

5. ON ACCESSES TO FIELD AND PRIVATE ENTRANCES THAT HAVE MORE THAN ONE POINT OF ACCESS, ONE ENTRANCE MAY BE TEMPORARILY CLOSED. HOWEVER, VEHICULAR ACCESS MUST REMAIN OPEN TO TRAFFIC FOR THE OPPOSITE ENTRANCE. WHEN IT IS NECESSARY TO CLOSE AN ENTRANCE, THE CONTRACTOR SHALL COORDINATE WITH THE RESIDENT ENGINEER AND THE PROPERTY OWNER FORTY-EIGHT (48) HOURS IN ADVANCE OF THE WORK. IN ALL CASES, THE ENTRANCE SHALL BE OPEN AT THE END OF THE WORKDAY.

CHANGEABLE MESSAGE SIGN

ELECTRONIC CHANGEABLE MESSAGE SIGNS ARE REQUIRED ON EACH END OF THE WORK ZONE TO WARN THE PUBLIC OF THE PENDING CONSTRUCTION WORK CHANGES IN TRAFFIC CONFIGURATIONS. THE MESSAGE BOARDS WILL INITIALLY BE PLACED AND SET OUT FOR SEVEN (7) DAYS IN ADVANCE OF THE ANTICIPATED FIRST DAY OF CONSTRUCTION. THE MESSAGE BOARDS WILL BE RELOCATED FOR EACH CHANGE IN WORK AREA AND WILL REMAIN IN USE AS DIRECT BY THE RESIDENT ENGINEER. THE CONTRACTOR WILL COORDINATE WITH THE RESIDENT ENGINEER ON THE EXACT PLACEMENT OF THE MESSAGE BOARDS AND THE MESSAGE THAT IS TO BE DISPLAYED.

KEEPING PAVEMENT CLEAN

THE CONTRACTOR WILL KEEP ALL PERMANENT PAVEMENT SURFACES CLEAN OF DIRT OR CONSTRUCTION DEBRIS. IN ACCORDANCE WITH ARTICLE 107.15 OF THE STANDARD SPECIFICATIONS, THE PAVEMENT SHALL BE CLEANED AT THE END OF EACH DAYS OPERATION OR MORE FREQUENTLY AS REQUIRED BY THE ENGINEER IF THE DEBRIS IS DEEMED TO BE A HAZARD TO THE MOTORING PUBLIC. THE COST OF THIS WORK SHALL BE INCLUDED IN THE UNIT PRICE BID AND NO ADDITIONAL COMPENSATION WILL BE ALLOWED.

LANDSCAPING - MAINTAIN ROADWAY SITE DISTANCE

TREES SHALL NOT BE PLANTED CLOSER TO THE EDGE OF PAVEMENT THAN WHAT IS SHOWN ON THE PLANS WITHOUT VERIFYING THAT THE PROPOSED LOCATION WILL NOT ADVERSELY AFFECT THE SIGHT DISTANCES FOR THE ROADWAY, INTERSECTIONS, AND DRIVEWAYS.

INDEX OF SHEETS

SHEET NO.	DESCRIPTION
1	COVER SHEET
2	GENERAL NOTES & INDEX
3-5	SUMMARY OF QUANTITIES
6	EARTHWORK SCHEDULE
7-8	ALIGNMEMT, TIES AND BENCHMARKS
9	SITE CONTOURS
10	TYPICAL SECTIONS
11-13	VEGETATIVE CONTROL & REMOVAL PLAN
15-16	GEOMETRIC PLAN
17	GEOMETRIC PLAN - ENTRANCE
18	PCC PAVEMENT JOINTING PLAN
19-21	GRADING & DRAINAGE PLAN
22-23	GENERAL DETAILS
24-26	SEEDING PLAN
27-29	PLANTING PLAN
30-31	SEEDING & PLANTING SCHEDULES
32	SEEDING & PLANTING DETAILS
33-35	SOIL EROSION & SEDIMENT CONTROL PLAN
36-37	SOIL EROSION & SEDIMENT CONTROL DETAILS
38	BOARDWALK STRUCTURE DETAILS
49-41	PROFILES
42-44	SOIL BORING LOGS - FOR REFERENCE ONLY
45-54	CROSS SECTIONS

INDEX OF STANDARDS

STANDARD NO.	DESCRIPTION
000001-06	STANDARD SYMBOLS, ABBREVIATIONS AND PATTERNS
280001-05	TEMPORARY EROSION CONTROL SYSTEMS
420001-07	PAVEMENT JOINTS
420101-04	24' (7.2m) JOINTED PCC PAVEMENT
602301-03	INLET - TYPE A
604036-02	GRATE TYPE 8
701006-03	OFF-RD OPERATIONS, 2L, 2W, 15' (4.5m) TO 24" (600mm) FROM PAVEMENT EDGE
701011-02	OFF-RD MOVING OPERATIONS, 2L, 2W, DAY ONLY
701201-04	LANE CLOSURE, 2L, 2W, DAY ONLY, FOR SPEEDS ≥ 45 MPH
701301-04	LANE CLOSURE, 2L, 2W, SHORT TIME OPERATIONS
701326-04	LANE CLOSURE, 2L, 2W, PAVEMENT WIDENING, FOR SPEEDS ≥ 45 MPH
701901-07	TRAFFIC CONTROL DEVICES
720001-01	SIGN PANEL MOUNTING DETAIL
728001-01	TELESCOPING STEEL SIGN SUPPORT
780001-03	TYPICAL PAVEMENT MARKINGS

SUMMARY OF QUANTITIES

SPECIALTY ITEM	CODE NO.	ITEM	UNIT	TOTAL QUANTITY	CONSTRUCTION CODE 80% FEDERAL 20% STATE LANDSCAPING 0031 URBAN	TRAINEES 042 URBAN	
*	20100110	TREE REMOVAL (6 TO 15 UNITS DIAMETER)	UNIT	1,171	1171		
*	20100210	TREE REMOVAL (OVER 15 UNITS DIAMETER)	UNIT	882	882		
	20101000	TEMPORARY FENCE	FOOT	2,497	2497		
	20101100	TREE TRUNK PROTECTION	EACH	11	11		
	20101700	SUPPLEMENTAL WATERING	UNIT	90	90		
*	20200100	EARTH EXCAVATION	CU YD	5,525	5525		
	20201200	REMOVAL AND DISPOSAL OF UNSUITABLE MATERIAL	CU YD	6,850	6850		
	20800150	TRENCH BACKFILL	CU YD	11	11		
*	21001000	GEOTECHNICAL FABRIC FOR GROUND STABILIZATION	SQ YD	600	600		
	21101505	TOPSOIL EXCAVATION AND PLACEMENT	CU YD	3,065	3065		
	25000115	SEEDING, CLASS 1B	ACRE	1.75	1.75		
	25000210	SEEDING, CLASS 2A	ACRE	0.25	0.25		
	25000400	NITROGEN FERTILIZER NUTRIENT	POUND	180	180		
	25000500	PHOSPHORUS FERTILIZER NUTRIENT	POUND	180	180		
	25000600	POTASSIUM FERTILIZER NUTRIENT	POUND	180	180		
	25100115	MULCH, METHOD 2	ACRE	39.75	39.75		
	25100630	EROSION CONTROL BLANKET	SQ YD	30,319	30319		
	25100635	HEAVY DUTY EROSION CONTROL BLANKET	SQ YD	2,080	2080		
	28000250	TEMPORARY EROSION CONTROL SEEDING	POUND	400	400		
	28000305	TEMPORARY DITCH CHECKS	FOOT	1,067	1067		
	28000315	AGGREGATE DITCH CHECKS	TON	33	33		
	28000400	PERIMETER EROSION BARRIER	FOOT	4,600	4600		
	28000500	INLET AND PIPE PROTECTION	EACH	14	14		
	28000510	INLET FILTERS	EACH	17	17		
	28200200	FILTER FABRIC	SQ YD	1,312	1312		
*	35102000	AGGREGATE BASE COURSE, TYPE B 8"	SQ YD	7,069	7069		
*	35102400	AGGREGATE BASE COURSE, TYPE B 12"	SQ YD	1,243	1243		
*	40200900	AGGREGATE SURFACE COURSE, TYPE B	CU YD	166	166		
*	40600200	BITUMINOUS MATERIALS (PRIME COAT)	TON	10	10		
*	40603310	HOT-MIX ASPHALT SURFACE COURSE, MIX "C", N50	TON	568	568		
*	42000300	PORTLAND CEMENT CONCRETE PAVEMENT 8"	SQ YD	768	768		
*	44000100	PAVEMENT REMOVAL	SQ YD	13	13		
*	44004250	PAVED SHOULDER REMOVAL	SQ YD	50	50		
*	48101500	AGGREGATE SHOULDERS, TYPE B 6"	SQ YD	26	26		
*	48203021	HOT-MIX ASPHALT SHOULDERS, 6"	SQ YD	9	9		

FILE NAME = W:\Projects\2011\110131 SteernsRd2A\cadd\Civil\Dgn\Sht\SOQ_110131_01.dgn

WILLS BURKE KELSEY ASSOCIATES LTD.
116 West Main Street, Suite 201
St. Charles, Illinois 60174
(630) 443-7755

USER NAME = $USER$	DESIGNED - PJF	REVISED -	
	DRAWN - NDP	REVISED -	
PLOT SCALE =	CHECKED - PDK	REVISED -	
PLOT DATE = 8/30/2011	DATE - 8/29/11	REVISED -	

STATE OF ILLINOIS
DEPARTMENT OF TRANSPORTATION

MCLEAN BLVD ENVIRONMENTAL ADAPTIVE MANAGEMENT PLANS
SUMMARY OF QUANTITIES

SCALE: | SHEET NO. 3 OF 54 SHEETS | STA. | TO STA.

F.A.U. RTE.	SECTION	COUNTY	TOTAL SHEETS	SHEET NO.
361	06-00214-11-LS	KANE	54	3

CONTRACT NO.63638

FED. ROAD DIST. NO. | ILLINOIS | FED. AID PROJECT

SUMMARY OF QUANTITIES

SPECIALTY ITEM	CODE NO.	ITEM	UNIT	TOTAL QUANTITY	CONSTRUCTION CODE 80% FEDERAL 20% STATE LANDSCAPING 0031 URBAN	TRAINEES 042 URBAN	
*	54213657	PRECAST REINFORCED CONCRETE FLARED END SECTIONS 12"	EACH	1	1		
*	54247090	GRATING FOR CONCRETE FLARED END SECTION 12"	EACH	1	1		
*	550A0050	STORM SEWERS, CLASS A, TYPE 1 12"	FOOT	244	244		
*	60107700	PIPE UNDERDRAINS 6"	FOOT	475	475		
*	60218400	MANHOLES, TYPE A, 4'-DIAMETER, TYPE 1 FRAME, CLOSED LID	EACH	1	1		
*	60236200	INLETS, TYPE A, TYPE 8 GRATE	EACH	13	13		
	67000400	ENGINEER'S FIELD OFFICE, TYPE A	CAL MO	16	16		
	67100100	MOBILIZATION	L SUM	1	1		
*	70100500	TRAFFIC CONTROL AND PROTECTION, STANDARD 701326	L SUM	1	1		
*	72000100	SIGN PANEL - TYPE 1	SQ FT	36	36		
*	72800100	TELESCOPING STEEL SIGN SUPPORT	FOOT	123	123		
*	78001100	PAINT PAVEMENT MARKING - LETTERS AND SYMBOLS	SQ FT	135	135		
*	78001110	PAINT PAVEMENT MARKING - LINE 4"	FOOT	582	582		
*	78001130	PAINT PAVEMENT MARKING - LINE 6"	FOOT	90	90		
*	78001180	PAINT PAVEMENT MARKING - LINE 24"	FOOT	34	34		
	A2002716	TREE, CARYA OVATA (SHAGBARK HICKORY), 2" CALIPER, BALLED AND BURLAPPED	EACH	7	7		
	A2005016	TREE, GYMNOCLADUS DIOICUS (KENTUCKY COFFEETREE), 2" CALIPER, BALLED AND BURLAPPED	EACH	20	20		
	A2005670	TREE, OSTRYA VIRGINIANA (AMERICAN HOPHORNBEAM), 8' HEIGHT, CLUMP FORM, BALLED AND BURLAPPED	EACH	28	28		
	A2006416	TREE, QUERCUS ALBA (WHITE OAK), 2" CALIPER, BALLED AND BURLAPPED	EACH	23	23		
	A2006516	TREE, QUERCUS BICOLOR (SWAMP WHITE OAK), 2" CALIPER, BALLED AND BURLAPPED	EACH	9	9		
	A2006716	TREE, QUERCUS MACROCARPA (BUR OAK), 2" CALIPER, BALLED AND BURLAPPED	EACH	51	51		
	A2007116	TREE, QUERCUS RUBRA (RED OAK), 2" CALIPER, BALLED AND BURLAPPED	EACH	23	23		
	B2001164	TREE, CERCIS CANADENSIS (EASTERN REDBUD), 5' HEIGHT, CLUMP FORM, BALLED AND BURLAPPED	EACH	17	17		
	B2003850	TREE, MALUS IOENSIS (IOWA CRABAPPLE) 5' HEIGHT, CLUMP FORM, BALLED AND BURLAPPED	EACH	17	17		
	C2002048	SHRUB, CORYLUS AMERICANA (AMERICAN FILBERT), 4' HEIGHT, BALLED AND BURLAPPED	EACH	14	14		
	C2005960	SHRUB, RHUS GLABRA (SMOOTH SUMAC), 5' HEIGHT, BALLED AND BURLAPPED	EACH	10	10		
	C2006036	SHRUB, RHUS TYPHINA (STAGHORN SUMAC), 3' HEIGHT, BALLED AND BURLAPPED	EACH	5	5		
	C2C12724	SHRUB, VIBURNUM PRUNIFOLIUM (BLACKHAW VIBURNUM), 2' HEIGHT, CONTAINER	EACH	11	11		
	K0013000	PERENNIAL PLANTS, PRAIRIE TYPE, 2" DIAMETER BY 4" DEEP PLUG	UNIT	24	24		
	K0013060	PERENNIAL PLANTS, SEDGE MEADOW TYPE, 2" DIAMETER BY 4" DEEP PLUG	UNIT	271	271		
	K0029614	WEED CONTROL, AQUATIC	GALLON	20	20		
	K0029632	WEED CONTROL, NON-SELECTIVE AND NON-RESIDUAL	GALLON	40	40		
	K1003660	MOWING CYCLES	EACH	4	4		
	X0321158	PARK BENCHES	EACH	5	5		
	X0324840	DISKING	ACRE	24.25	24.25		

SUMMARY OF QUANTITIES

SPECIALTY ITEM	CODE NO.	ITEM	UNIT	TOTAL QUANTITY	CONSTRUCTION CODE 80% FEDERAL 20% STATE LANDSCAPING 0031 URBAN	TRAINEES 042 URBAN	
*	X0326806	WASHOUT BASIN	L SUM	1	1		
*	X0327036	BIKE PATH REMOVAL	SQ YD	59	59		
*	X0350805	FOLD DOWN BOLLARDS	EACH	1	1		
*	X2130010	EXPLORATION TRENCH, SPECIAL	FOOT	100	100		
*	X4200408	PORTLAND CEMENT CONCRETE PAVEMENT 8", SPECIAL	SQ YD	1,144	1144		
*	X6650202	WOVEN WIRE FENCE REMOVAL	FOOT	258	258		
*	X7010237	CHANGEABLE MESSAGE SIGN, SPECIAL	CAL DA	14	14		
	XX006702	SEEDING, CLASS 4 (MODIFIED) WET TO MESIC PRAIRIE	ACRE	11	11		
	XX006707	SEEDING, CLASS 4 (MODIFIED) SEDGE MEADOW	ACRE	4	4		
	XX006710	SEEDING, CLASS 5 (MODIFIED) WET TO MESIC PRAIRIE	ACRE	11	11		
	XX006715	SEEDING, CLASS 5 (MODIFIED) SEDGE MEADOW	ACRE	4	4		
	XX006731	LEVEL SPREADER	FOOT	1,896	1896		
*	XX008287	BOARDWALK STRUCTURE	SQ FT	1,000	1000		
	XX008485	SEEDING, CLASS 4 (MODIFIED) DRY TO MESIC PRAIRIE	ACRE	26.25	26.25		
	XX008486	SEEDING, CLASS 5 (MODIFIED) DRY TO MESIC PRAIRIE	ACRE	26.25	26.25		
*	XX008487	CONTROL BURN	ACRE	16	16		
	XX008488	PLANTER FENCE (SPECIAL 1)	SQ YD	853	853		
*	Z0001050	AGGREGATE SUBGRADE 12"	SQ YD	851	851		
*	Z0003855	BICYCLE RACKS	EACH	1	1		
*	Z0013797	STABILIZED CONSTRUCTION ENTRANCE	SQ YD	389	389		
*	Z0013798	CONSTRUCTION LAYOUT	L SUM	1	1		
	Z0019600	DUST CONTROL WATERING	UNIT	100	100		
*	Z0042002	POROUS GRANULAR EMBANKMENT, SUBGRADE	CU YD	200	200		
	Z0064600	SELECTIVE CLEARING	ACRE	0.7	0.7		
	Z0076600	TRAINEES	HOUR	500		500	
	XX008583	SEEDING, CLASS 4 (MODIFIED) FEN	ACRE	0.75	0.75		
	XX008584	SEEDING, CLASS 5 (MODIFIED) FEN	ACRE	0.75	0.75		
	XX008585	SEEDING, CLASS 4 (MODIFIED) LOW PROFILE PRAIRIE	ACRE	0.25	0.25		
	XX008586	SEEDING, CLASS 5 (MODIFIED) LOW PROFILE PRAIRIE	ACRE	0.25	0.25		
	XX008587	SEEDING, CLASS 4 (MODIFIED) DRY TO MESIC SAVANNA	ACRE	2.5	2.5		
	XX008588	SEEDING, CLASS 5 (MODIFIED) DRY TO MESIC SAVANNA	ACRE	2.5	2.5		

EARTHWORK SCHEDULE

LOCATION	EARTHWORK					TOPSOIL				SUBGRADE IMPROVEMENT		
	20200100					20201200		21101505		20201200	Z0042002	21001000
	EARTH EXCAVATION (CUT)	ROCK EXCAVATION	EXCAVATION TO BE USED IN FILL WITH SF (15%)	EMBANKMENT - STRUCTURAL (FILL)	EARTHWORK BALANCE WASTE (+) OR SHORTAGE (-)	REMOVAL & DISPOSAL OF UNSUITABLE MATERIAL	TOPSOIL TO BE USED FOR TOPSOIL RESPREAD SF (15%)	TOPSOIL EXCAVATION AND PLACEMENT	TOPSOIL BALANCE WASTE (+) OR SHORTAGE (-)	REMOVAL & DISPOSAL OF UNSUITABLE MATERIAL	POROUS GRANULAR EMBANKMENT SUBGRADE	GEOTECHNICAL FABRIC FOR GROUND STABILIZATION
	(CU YD)	(CU YD)	(CU YD)	(CU YD)	(CU YD)	(CU YD)	(CU YD)	(CU YD)	(CU YD)	(CU YD)	(CU YD)	(SQ YD)
ALIGNMENT A												
STA. 100+00 TO 134+00	3,940	0	3,349	754	2,595	3,757	3,193	1,912	1,281			
ALIGNMENT B												
STA. 200+00 TO 207+00	745	0	633	223	410	733	623	350	273			
ALIGNMENT C												
STA. 50+81.26 TO 54+42.67	46	0	39	30	9	213	181	92	89			
ALIGNMENT D												
STA. 300+28.57 TO 312+00	290	0	247	147	100	1,051	893	198	695			
PARKING LOT AND ENTRANCE	500	0	425	141	284	893	759	512	247			
ESTIMATED										200	200	600
TOTAL	**5,521**	**0**	**4,693**	**1,295**	**3,398**	**6,647**	**5,649**	**3,064**	**2,585**	**200**	**200**	**600**
PLAN QUANTITY	**5,525**					**6,850**		**3,065**			**200**	**600**

SHRINKAGE FACTORS: EARTH EXCAVATION:	15%
TOPSOIL EXCAVATION:	15%

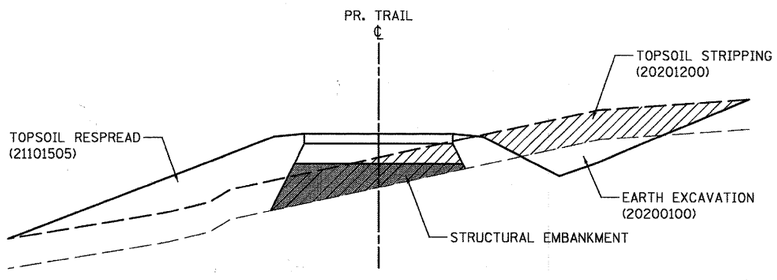

TYPICAL EARTHWORK CROSS SECTION

EARTHWORK GENERAL NOTES

1. ALL EARTHWORK QUANTITIES ARE CALCULATED BY THE METHOD OF AVERAGE END AREAS USING THE PLAN CROSS SECTIONS.
2. SHRINKAGE FACTOR, ASSUMED TO BE 15% FOR THIS PROJECT IS ESTIMATED FOR THE PURPOSE OF DETERMINING A BALANCE OF EARTHWORK. THE CONTRACTOR SHALL ESTIMATE HIS OWN SHRINKAGE FACTORS IN DETERMINING HIS EARTHWORK. NO PAYMENT WILL BE MADE ON EARTHWORK QUANTITIES DUE TO VARIATION IN THE SHRINKAGE FACTOR SINCE EARTHWORK IS MEASURED IN ITS FINAL POSITION.
3. A SOILS INVESTIGATION WAS NOT COMPLETED SPECIFICALLY FOR THIS PROJECT. HOWEVER, THERE WAS AN OVERALL GEOTECHNICAL REPORT COMPLETED FOR THE STEARNS ROAD STAGE 2 PROJECT (06-00214-10-BR) WHICH INCLUDED 12-14 MONITORING WELL BORINGS THAT FALL WITHIN THE LIMITS OF THIS PROJECT. INFORMATION CONTAINED IN THESE BORINGS WAS USED IN PREPARATION OF THE EARTHWORK AND RELATED QUANTITY CALCULATIONS. THE BORINGS HAVE BEEN INCLUDED IN THE PLANS FOR REFERENCE ONLY.
4. AS INDICATED IN THE MONITORING WELL BORINGS, THE TOPSOIL THICKNESS WAS ESTIMATED AT 12-24 INCHS. TWELVE (12) INCHES WAS ASSUMED ON THIS PROJECT FOR THE PURPOSE OF CALCULATING TOPSOIL STRIPPING QUANTITIES.
5. IF UNDERCUTS ARE ENCOUNTERED, UNDERCUTS WILL BE PAID FOR AS REMOVAL AND DISPOSAL OF UNSUITABLE MATERIAL. AFTER TOPSOIL STRIPPING AND VEGATATION CLEARING AND PRIOR TO UNDERCUTTING, THE SUBGRADE WILL BE TESTED WITH A STATIC OR DYNAMIC CONE PENETROMETER IN ACORDANCE WITH THE IDOT SUBGRADE STABILITY MANUAL TO DETERMINE REMEDIAL TREATMENT.
6. TESTING OF SUBGRADES AND EMBANKMENTS WILL BE REQUIRED. TESTING REQUIRMENTS WILL BE PER THE APPLICABLE SECTIONS OF THE STANDARD SPECIFICATIONS AND THE SUBGRADE STABILITY MANUAL. IF PROOF ROLLS ARE REQUIRED BY THE ENGINEER, THE COST SHALL BE CONSIDERED INCLUDED IN THE COST OF EXCAVATION.
7. IN ADDITION TO ANY AREAS SHOWN ON THE PLANS, 200 CY OF POROUS GRANUALR EMBANKMENT SUBGRADE HAS BEEN PROVIDED FOR LOCATIONS WHERE SOILS TEND TO BE UNSTABLE WHEN WET. THE ACTUAL NEED FOR REMOVAL AND REPLACEMENT WITH PGES WILL BE DETERMINED IN THE FIELD AT THE TIME OF CONSTRCUTION BY THE SOILS ENGINEER (BY USE OF A CONE PENETROMETER IN CONJUNCTION WITH THE IDOT SUBGRADE STABILITY MANUAL AND ROLL USING FULL LOAD SEMI), IF UNSUITABLE AND/OR UNSTABLE MATERIALS ARE NOT ENCOUNTERED, THEN THE QUANTITY SHALL BE DEDUCTED AND NO ADDITIONAL COMPENSATION WILL BE DUE THE CONTRACTOR.
8. EARTH EXCAVATION SHALL BE PAID FOR ONLY ONCE, REGARDLESS OF STAGING OR SEQUENCING OF CONTRACTORS OPERATIONS THAT REQUIRE STOCKPILING OF MATERIALS FOR LATER USE FOR REDISTRIBUTION AND RESPREADING IN SHOULDERS AND CONSTRUCTING OF EMBANKMENTS.

FILE NAME = W:\Projects\2811\11813I StearnsRd2R\cadd\Civil\Dgn\Sht\EW QUANT_11813I.dgn

McDonough Associates Inc.
Engineers / Architects
130 East Randolph Street
Chicago, Illinois 60601
(312) 946-8600

USER NAME = nparris	DESIGNED -	REVISED -	STATE OF ILLINOIS DEPARTMENT OF TRANSPORTATION
	DRAWN -	REVISED -	
PLOT SCALE =	CHECKED -	REVISED -	
PLOT DATE = 8/30/2011	DATE - 8/29/11	REVISED -	

MCLEAN BLVD ENVIRONMENTAL ADAPTIVE MANAGEMENT PLANS
EARTHWORK SCHEDULE

SCALE: | SHEET NO. 6 OF 54 SHEETS | STA. | TO STA.

F.A.P. RTE.	SECTION	COUNTY	TOTAL SHEETS	SHEET NO.
361	06-00214-11-LS	KANE	54	6
		CONTRACT NO.63638		
FED. ROAD DIST. NO.	ILLINOIS	FED. AID PROJECT		

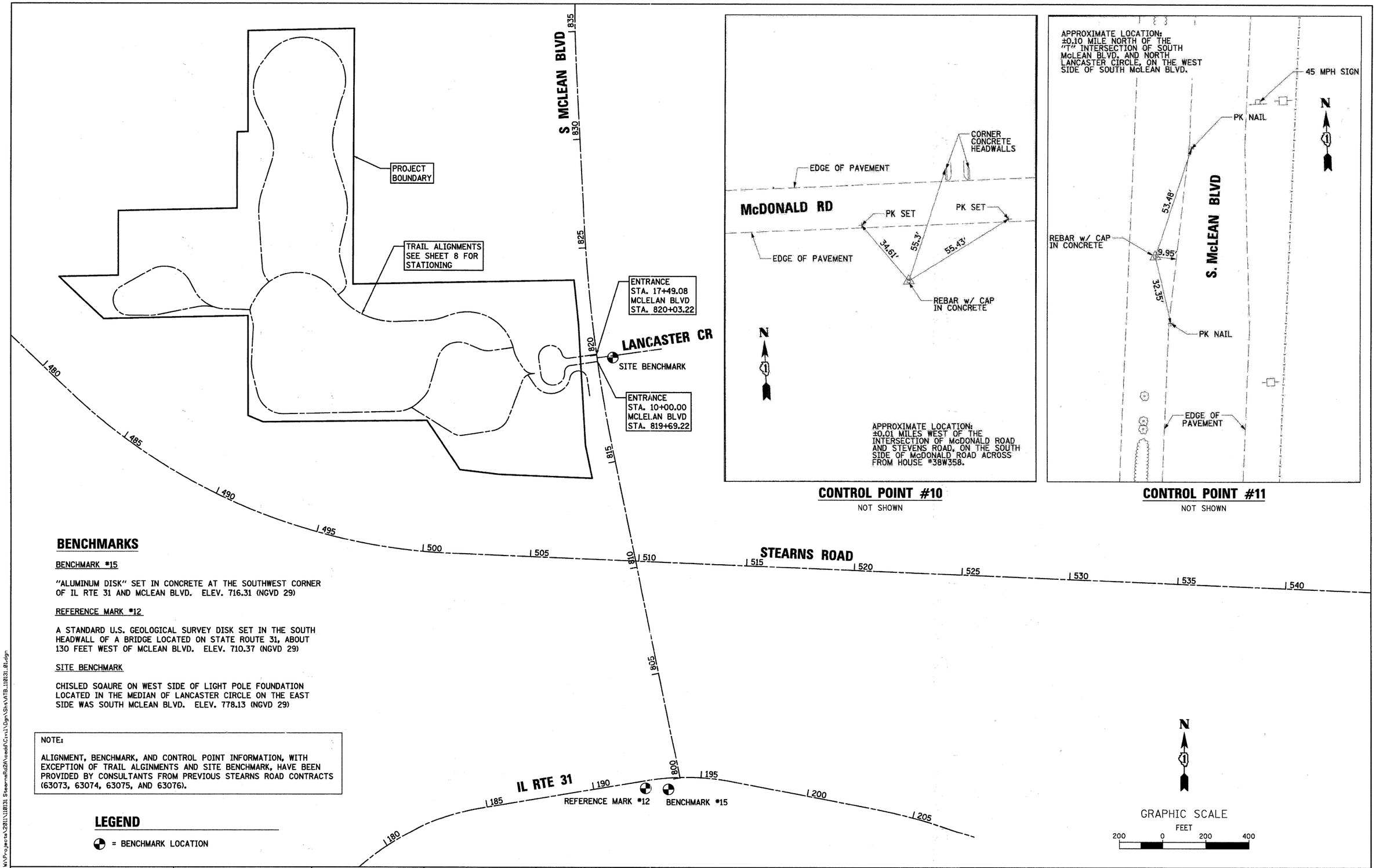

CONTROL POINT #10
NOT SHOWN

CONTROL POINT #11
NOT SHOWN

BENCHMARKS

BENCHMARK #15

"ALUMINUM DISK" SET IN CONCRETE AT THE SOUTHWEST CORNER OF IL RTE 31 AND MCLEAN BLVD. ELEV. 716.31 (NGVD 29)

REFERENCE MARK #12

A STANDARD U.S. GEOLOGICAL SURVEY DISK SET IN THE SOUTH HEADWALL OF A BRIDGE LOCATED ON STATE ROUTE 31, ABOUT 130 FEET WEST OF MCLEAN BLVD. ELEV. 710.37 (NGVD 29)

SITE BENCHMARK

CHISLED SQAURE ON WEST SIDE OF LIGHT POLE FOUNDATION LOCATED IN THE MEDIAN OF LANCASTER CIRCLE ON THE EAST SIDE WAS SOUTH MCLEAN BLVD. ELEV. 778.13 (NGVD 29)

NOTE:

ALIGNMENT, BENCHMARK, AND CONTROL POINT INFORMATION, WITH EXCEPTION OF TRAIL ALGINMENTS AND SITE BENCHMARK, HAVE BEEN PROVIDED BY CONSULTANTS FROM PREVIOUS STEARNS ROAD CONTRACTS (63073, 63074, 63075, AND 63076).

LEGEND

= BENCHMARK LOCATION

FILE NAME = W:\Projects\2011\11013 Stearns Rd2A\cadd\Civil\Dgn\Sht\ATB.11013.01.dgn

WILLS BURKE KELSEY ASSOCIATES LTD.
116 West Main Street, Suite 201
St. Charles, Illinois 60174

USER NAME = nparris	DESIGNED - PJF	REVISED -
	DRAWN - NDP	REVISED -
PLOT SCALE = 1"=200'	CHECKED - PDK	REVISED -
PLOT DATE = 8/30/2011	DATE - 8/29/11	REVISED -

STATE OF ILLINOIS
DEPARTMENT OF TRANSPORTATION

MCLEAN BLVD ENVIRONMENTAL ADAPTIVE MANAGEMENT PLANS
ALIGNMENT, TIES AND BENCHMARKS

SCALE: 1"=200' | SHEET NO. 1 OF 2 SHEETS | STA. TO STA.

F.A.P. RTE.	SECTION	COUNTY	TOTAL SHEETS	SHEET NO.
361	06-00214-11-LS	KANE	54	7
		CONTRACT NO.63638		
FED. ROAD DIST. NO.	ILLINOIS	FED. AID PROJECT		

PROP. CURVE ALIGN A-1
PI STA. = 100+32.45
Δ = 63° 49′ 31″ (RT)
D = 114° 35′ 30″
R = 50.00′
T = 31.14′
L = 55.70′
E = 8.90′
P.C. STA = 100+01.31
P.T. STA = 100+57.01

PROP. CURVE ALIGN A-2
PI STA. = 101+27.48
Δ = 20° 42′ 44″ (RT)
D = 28° 38′ 52″
R = 200.00′
T = 36.55′
L = 72.30′
E = 3.31′
P.C. STA = 100+90.93
P.T. STA = 101+63.23

PROP. CURVE ALIGN A-3
PI STA. = 104+04.73
Δ = 95° 20′ 08″ (LT)
D = 26° 02′ 37″
R = 220.00′
T = 241.50′
L = 366.06′
E = 106.69′
P.C. STA = 101+63.23
P.T. STA = 105+29.29

PROP. CURVE ALIGN A-4
PI STA. = 106+13.95
Δ = 16° 55′ 56″ (RT)
D = 22° 55′ 06″
R = 250.00′
T = 37.21′
L = 73.88′
E = 2.75′
P.C. STA = 105+76.74
P.T. STA = 106+50.62

PROP. CURVE ALIGN A-5
PI STA. = 109+55.57
Δ = 52° 28′ 15″ (RT)
D = 17° 21′ 44″
R = 330.00′
T = 162.63′
L = 302.21′
E = 37.90′
P.C. STA = 107+92.94
P.T. STA = 110+95.15

PROP. CURVE ALIGN A-6
PI STA. = 114+47.43
Δ = 110° 49′ 07″ (LT)
D = 26° 16′ 57″
R = 218.00′
T = 316.12′
L = 421.64′
E = 166.00′
P.C. STA = 111+31.31
P.T. STA = 115+52.96

PROP. CURVE ALIGN A-7
PI STA. = 116+12.66
Δ = 27° 21′ 48″ (LT)
D = 114° 35′ 30″
R = 50.00′
T = 12.17′
L = 23.88′
E = 1.46′
P.C. STA = 116+00.49
P.T. STA = 116+24.37

PROP. CURVE ALIGN A-8
PI STA. = 116+31.47
Δ = 16° 10′ 18″ (LT)
D = 114° 35′ 30″
R = 50.00′
T = 7.10′
L = 14.11′
E = 0.50′
P.C. STA = 116+24.37
P.T. STA = 116+38.48

PROP. CURVE ALIGN A-9
PI STA. = 116+96.13
Δ = 16° 46′ 26″ (RT)
D = 57° 17′ 45″
R = 100.00′
T = 14.74′
L = 29.28′
E = 1.08′
P.C. STA = 116+81.39
P.T. STA = 117+10.67

PROP. CURVE ALIGN A-10
PI STA. = 118+92.29
Δ = 16° 46′ 48″ (LT)
D = 28° 38′ 52″
R = 200.00′
T = 29.50′
L = 58.57′
E = 2.16′
P.C. STA = 118+62.79
P.T. STA = 119+21.37

PROP. CURVE ALIGN A-11
PI STA. = 121+14.93
Δ = 77° 28′ 55″ (LT)
D = 45° 50′ 12″
R = 125.00′
T = 100.29′
L = 169.04′
E = 35.26′
P.C. STA = 120+14.64
P.T. STA = 121+83.68

PROP. CURVE ALIGN A-12
PI STA. = 127+41.17
Δ = 26° 48′ 37″ (LT)
D = 36° 57′ 54″
R = 155.00′
T = 36.94′
L = 72.53′
E = 4.34′
P.C. STA = 127+04.23
P.T. STA = 127+76.76

PROP. CURVE ALIGN A-13
PI STA. = 128+00.13
Δ = 17° 08′ 49″ (LT)
D = 36° 57′ 54″
R = 155.00′
T = 23.37′
L = 46.39′
E = 1.75′
P.C. STA = 127+76.76
P.T. STA = 128+23.15

PROP. CURVE ALIGN A-14
PI STA. = 128+78.50
Δ = 28° 34′ 43″ (LT)
D = 57° 17′ 45″
R = 100.00′
T = 25.47′
L = 49.88′
E = 3.19′
P.C. STA = 128+53.03
P.T. STA = 129+02.91

PROP. CURVE ALIGN A-15
PI STA. = 131+58.67
Δ = 96° 17′ 58″ (RT)
D = 57° 17′ 45″
R = 100.00′
T = 111.65′
L = 168.07′
E = 49.88′
P.C. STA = 130+47.03
P.T. STA = 132+15.10

PROP. CURVE ALIGN A-16
PI STA. = 133+06.78
Δ = 30° 35′ 30″ (LT)
D = 57° 17′ 45″
R = 100.00′
T = 27.35′
L = 53.39′
E = 3.67′
P.C. STA = 132+79.43
P.T. STA = 133+32.82

PROP. CURVE ALIGN B-1
PI STA. = 200+45.70
Δ = 61° 12′ 16″ (LT)
D = 114° 35′ 30″
R = 50.00′
T = 29.57′
L = 53.41′
E = 8.09′
P.C. STA = 200+16.13
P.T. STA = 200+69.54

PROP. CURVE ALIGN B-2
PI STA. = 203+06.86
Δ = 60° 12′ 24″ (RT)
D = 57° 17′ 45″
R = 100.00′
T = 57.98′
L = 105.08′
E = 15.59′
P.C. STA = 202+48.88
P.T. STA = 203+53.96

PROP. CURVE ALIGN B-3
PI STA. = 205+14.93
Δ = 40° 39′ 25″ (RT)
D = 95° 29′ 35″
R = 60.00′
T = 22.23′
L = 42.58′
E = 3.99′
P.C. STA = 204+92.70
P.T. STA = 205+35.28

PROP. CURVE ALIGN C-1
PI STA. = 53+17.58
Δ = 160° 47′ 10″ (LT)
D = 143° 14′ 22″
R = 40.00′
T = 236.32′
L = 112.25′
E = 199.68′
P.C. STA = 50+81.26
P.T. STA = 51+93.51

PROP. CURVE ALIGN C-2
PI STA. = 54+10.05
Δ = 134° 51′ 45″ (RT)
D = 63° 39′ 43″
R = 90.00′
T = 216.54′
L = 211.84′
E = 144.50′
P.C. STA = 51+93.51
P.T. STA = 54+05.35

PROP. CURVE ALIGN D-1
PI STA. = 301+38.22
Δ = 14° 47′ 04″ (RT)
D = 34° 43′ 29″
R = 165.00′
T = 21.41′
L = 42.58′
E = 1.38′
P.C. STA = 301+16.81
P.T. STA = 301+59.39

PROP. CURVE ALIGN D-2
PI STA. = 302+02.81
Δ = 27° 52′ 09″ (LT)
D = 32° 44′ 26″
R = 175.00′
T = 43.42′
L = 85.12′
E = 5.31′
P.C. STA = 301+59.39
P.T. STA = 302+44.51

PROP. CURVE ALIGN D-3
PI STA. = 304+51.53
Δ = 11° 48′ 14″ (RT)
D = 28° 38′ 52″
R = 200.00′
T = 20.68′
L = 41.20′
E = 1.07′
P.C. STA = 304+30.85
P.T. STA = 304+72.06

PROP. CURVE ALIGN D-4
PI STA. = 308+40.53
Δ = 150° 22′ 17″ (RT)
D = 79° 34′ 39″
R = 72.00′
T = 272.23′
L = 188.96′
E = 209.59′
P.C. STA = 305+68.30
P.T. STA = 307+57.26

PROP. CURVE ALIGN D-5
PI STA. = 310+48.11
Δ = 90° 56′ 00″ (RT)
D = 43° 04′ 46″
R = 133.00′
T = 135.18′
L = 211.08′
E = 56.64′
P.C. STA = 309+12.93
P.T. STA = 311+24.01

PROP. CURVE ALIGN D-6
PI STA. = 312+39.78
Δ = 45° 14′ 22″ (LT)
D = 34° 43′ 29″
R = 165.00′
T = 68.75′
L = 130.28′
E = 13.75′
P.C. STA = 311+71.03
P.T. STA = 313+01.31

PROP. CURVE ALIGN F-1
PI STA. = 400+57.83
Δ = 65° 51′ 39″ (LT)
D = 114° 35′ 30″
R = 50.00′
T = 32.38′
L = 57.47′
E = 9.57′
P.C. STA = 400+25.45
P.T. STA = 400+82.92

PROP. CURVE ALIGN F-2
PI STA. = 402+17.82
Δ = 29° 13′ 38″ (RT)
D = 38° 11′ 50″
R = 150.00′
T = 39.11′
L = 76.52′
E = 5.01′
P.C. STA = 401+78.71
P.T. STA = 402+55.23

PROP. CURVE ALIGN F-3
PI STA. = 404+37.36
Δ = 31° 47′ 17″ (LT)
D = 19° 05′ 55″
R = 300.00′
T = 85.42′
L = 166.44′
E = 11.92′
P.C. STA = 403+51.94
P.T. STA = 405+18.38

PROP. CURVE ALIGN F-4
PI STA. = 407+37.86
Δ = 32° 42′ 19″ (RT)
D = 19° 05′ 55″
R = 300.00′
T = 88.03′
L = 171.24′
E = 12.65′
P.C. STA = 406+49.83
P.T. STA = 408+21.08

PROP. CURVE ALIGN F-5
PI STA. = 409+39.12
Δ = 7° 18′ 47″ (RT)
D = 28° 38′ 52″
R = 200.00′
T = 12.78′
L = 25.53′
E = 0.41′
P.C. STA = 409+26.34
P.T. STA = 409+51.87

PROP. CURVE ALIGN F-6
PI STA. = 424+83.37
Δ = 165° 07′ 10″ (LT)
D = 28° 38′ 52″
R = 200.00′
T = 1,531.50′
L = 576.38′
E = 1,344.50′
P.C. STA = 409+51.87
P.T. STA = 415+28.25

PROP. CURVE ALIGN F-7
PI STA. = 416+97.39
Δ = 63° 52′ 37″ (LT)
D = 28° 38′ 52″
R = 200.00′
T = 124.68′
L = 222.97′
E = 35.68′
P.C. STA = 415+72.72
P.T. STA = 417+95.69

PROP. CURVE ALIGN F-8
PI STA. = 419+89.86
Δ = 44° 45′ 49″ (RT)
D = 28° 38′ 52″
R = 200.00′
T = 82.36′
L = 156.25′
E = 16.29′
P.C. STA = 419+07.50
P.T. STA = 420+63.75

PROP. CURVE ALIGN F-9
PI STA. = 422+62.94
Δ = 21° 54′ 59″ (LT)
D = 19° 05′ 55″
R = 300.00′
T = 58.09′
L = 114.75′
E = 5.57′
P.C. STA = 422+04.85
P.T. STA = 423+19.61

PROP. CURVE ALIGN F-10
PI STA. = 425+88.11
Δ = 33° 16′ 18″ (LT)
D = 57° 17′ 45″
R = 100.00′
T = 29.88′
L = 58.07′
E = 4.37′
P.C. STA = 425+58.23
P.T. STA = 426+16.30

PROP. CURVE ALIGN E-1
PI STA. = 11+55.02
Δ = 85° 07′ 26″ (LT)
D = 190° 59′ 09″
R = 30.00′
T = 27.55′
L = 44.57′
E = 10.73′
P.C. STA = 11+27.47
P.T. STA = 11+72.04

PROP. CURVE ALIGN E-2
PI STA. = 17+67.59
Δ = 169° 26′ 50″ (RT)
D = 104° 10′ 27″
R = 55.00′
T = 595.55′
L = 162.66′
E = 543.09′
P.C. STA = 11+72.04
P.T. STA = 13+34.70

PROP. CURVE ALIGN E-3
PI STA. = 14+92.72
Δ = 108° 02′ 30″ (RT)
D = 104° 10′ 27″
R = 55.00′
T = 75.76′
L = 103.71′
E = 38.62′
P.C. STA = 14+16.96
P.T. STA = 15+20.68

PROP. CURVE ALIGN E-4
PI STA. = 15+53.05
Δ = 60° 57′ 45″ (RT)
D = 104° 10′ 27″
R = 55.00′
T = 32.37′
L = 58.52′
E = 8.82′
P.C. STA = 15+20.68
P.T. STA = 15+79.20

PROP. CURVE ALIGN E-5
PI STA. = 16+03.67
Δ = 82° 18′ 14″ (LT)
D = 204° 37′ 40″
R = 28.00′
T = 24.47′
L = 40.22′
E = 9.19′
P.C. STA = 15+79.20
P.T. STA = 16+19.42

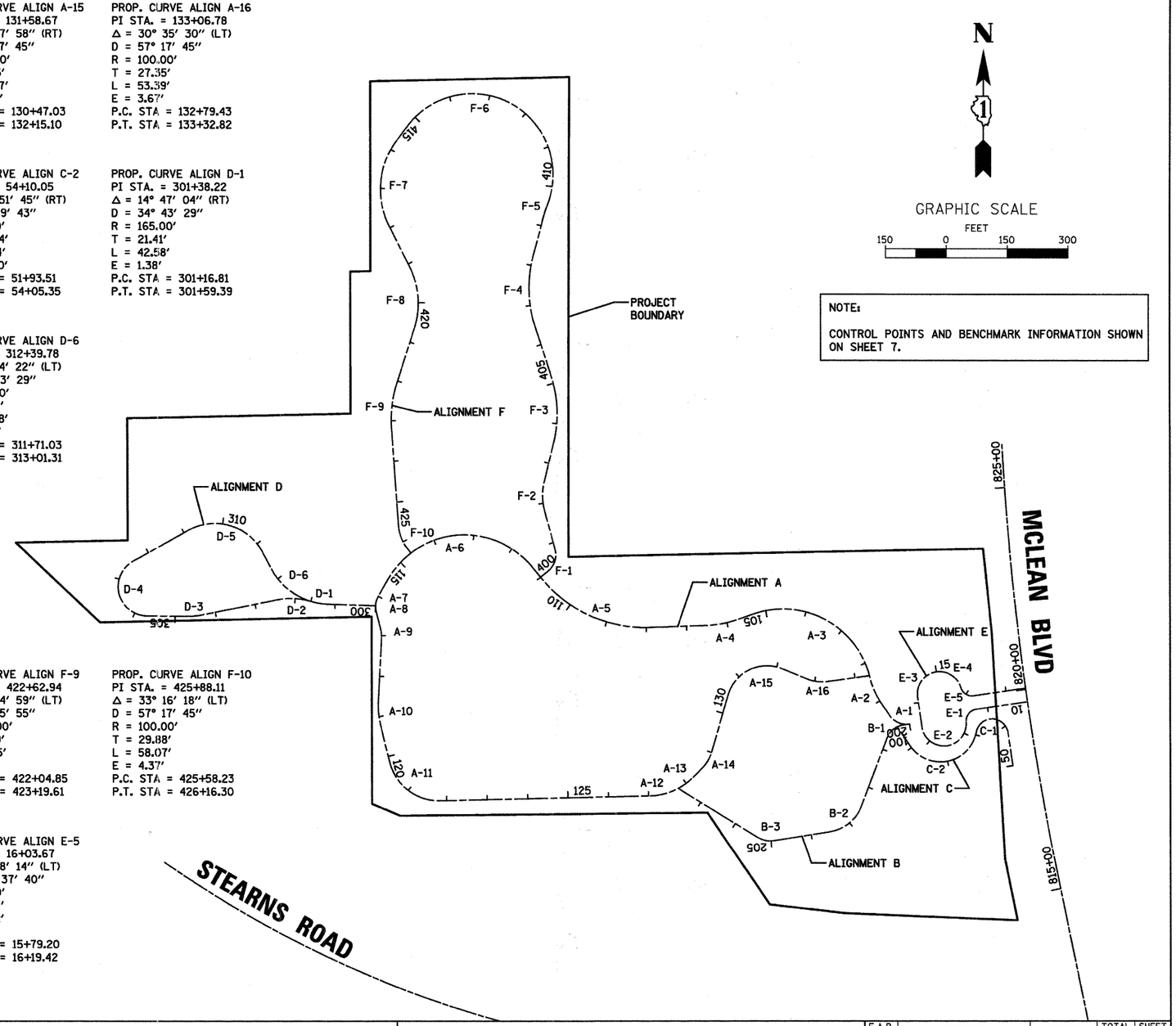

NOTE:

CONTROL POINTS AND BENCHMARK INFORMATION SHOWN ON SHEET 7.

FILE NAME = W:\Projects\2011\110131 StearnsRd2A\cadd\Civil\Dgn\Sh\ATB_110131_B2.dgn

WILLS BURKE KELSEY ASSOCIATES LTD.
116 West Main Street, Suite 201
St. Charles, Illinois 60174

USER NAME = nparris	DESIGNED - PJF	REVISED -	
	DRAWN - NDP	REVISED -	
PLOT SCALE = 1"=150'	CHECKED - PDK	REVISED -	
PLOT DATE = 8/30/2011	DATE - 8/29/11	REVISED -	

STATE OF ILLINOIS
DEPARTMENT OF TRANSPORTATION

MCLEAN BLVD ENVIRONMENTAL ADAPTIVE MANAGEMENT PLANS
ALIGNMENT, TIES AND BENCHMARKS

SCALE: 1"=150' | SHEET NO. 2 OF 2 SHEETS | STA. TO STA.

F.A.P. RTE.	SECTION	COUNTY	TOTAL SHEETS	SHEET NO.
361	06-00214-11-LS	KANE	54	8
		CONTRACT NO.63638		
FED. ROAD DIST. NO.	ILLINOIS	FED. AID PROJECT		

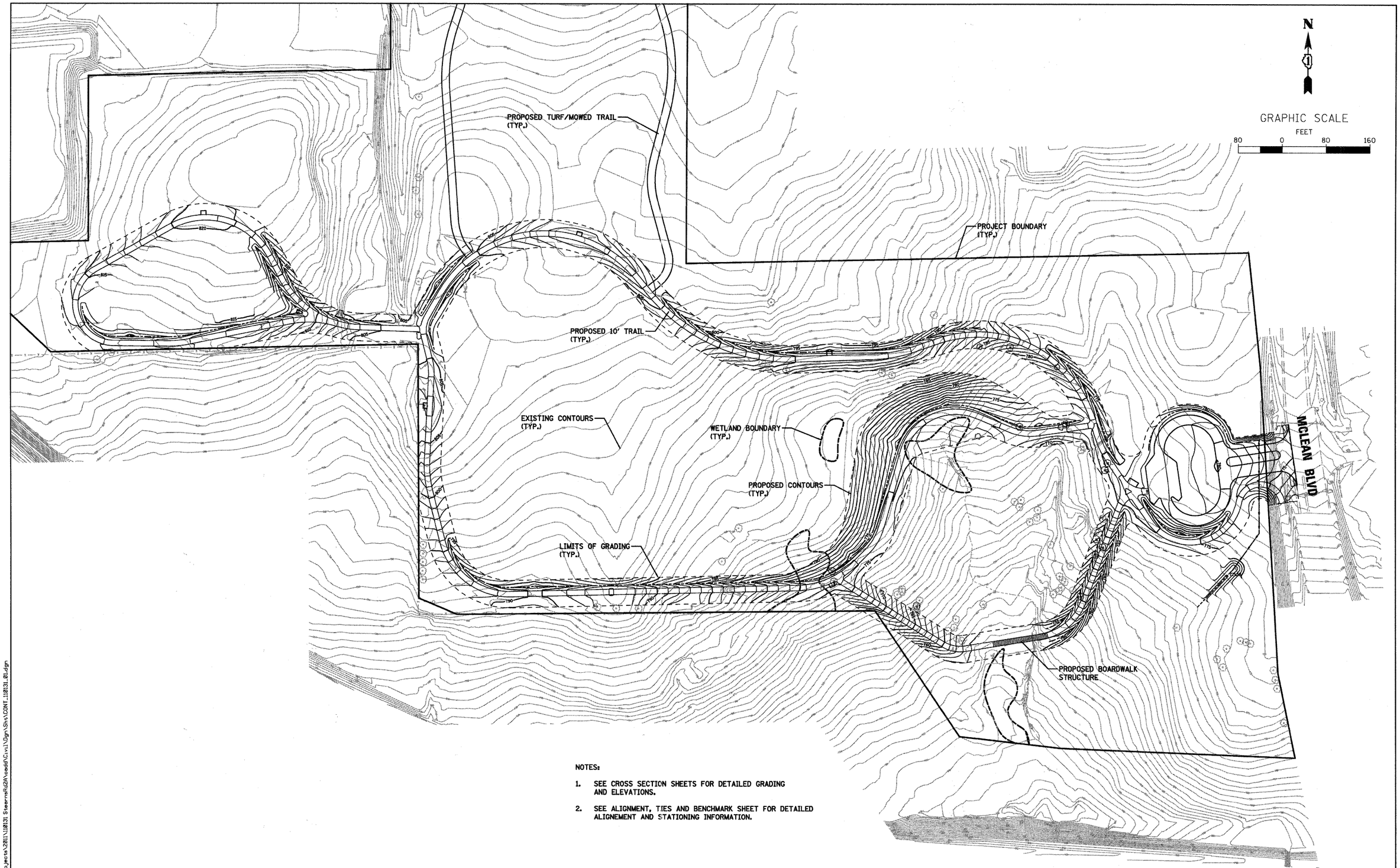

NOTES:

1. SEE CROSS SECTION SHEETS FOR DETAILED GRADING AND ELEVATIONS.
2. SEE ALIGNMENT, TIES AND BENCHMARK SHEET FOR DETAILED ALIGNEMENT AND STATIONING INFORMATION.

FILE NAME = W:\Projects\2011\110131 SteernsRd2A\cadd\Civil\Dgn\Sht\CONT_110131_01.dgn

WBK WILLS BURKE KELSEY ASSOCIATES LTD. 116 West Main Street, Suite 201 St. Charles, Illinois 60174	USER NAME = nparris	DESIGNED - PJF	REVISED -	STATE OF ILLINOIS DEPARTMENT OF TRANSPORTATION	MCLEAN BLVD ENVIRONMENTAL ADAPTIVE MANAGEMENT PLANS SITE CONTOURS	F.A.P. RTE. 361	SECTION 06-00214-11-LS	COUNTY KANE	TOTAL SHEETS 54	SHEET NO. 9
		DRAWN - NDP	REVISED -					CONTRACT NO.63638		
	PLOT SCALE = 1"=80'	CHECKED - PDK	REVISED -							
	PLOT DATE = 8/30/2011	DATE - 8/29/11	REVISED -		SCALE: 1"=80' SHEET NO. 9 OF 54 SHEETS STA. TO STA.	FED. ROAD DIST. NO.	ILLINOIS	FED. AID PROJECT		

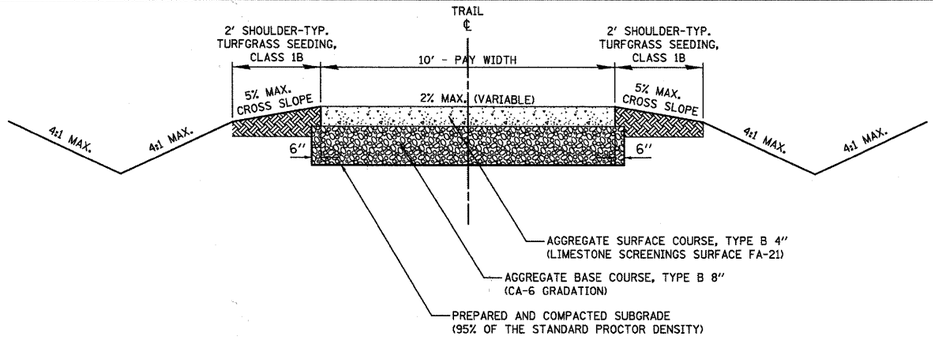

NOTES:

1. EACH LAYER OF PLACED STONE SHALL BE LEVELED AND THE FINAL COURSE COMPACTED TO 95% COMPACTION.

2. FINAL GRADE OF LIMESTONE SCREENINGS SHALL BE CONSTRUCTED WITH A MAXIMUM CROSS SLOPE OF 2%.

PROPOSED TYPICAL SECTION NO. 1
AGGREGATE TRAIL

ALIGNMENT A
STA. 127+92.7 TO STA. 134+24.6

ALIGNMENT D
STA. 302+97.4 TO 310+02.50

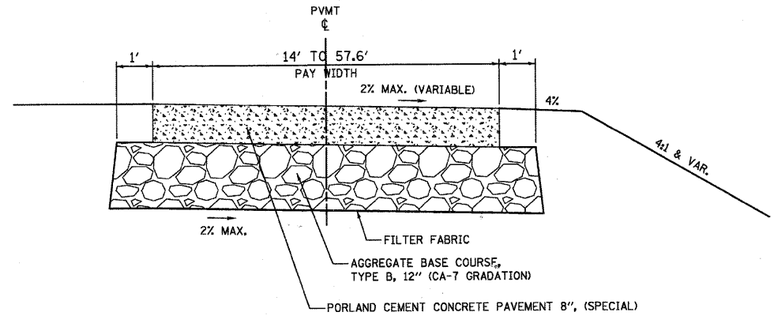

PROPOSED TYPICAL SECTION NO. 3
PORTLAND CEMENT CONCRETE PAVEMENT, 8" SPECIAL

ALIGNMENT E
STA. 10+27.0 TO STA. 11+72.8
STA. 15+79.9 TO STA. 17+22.1

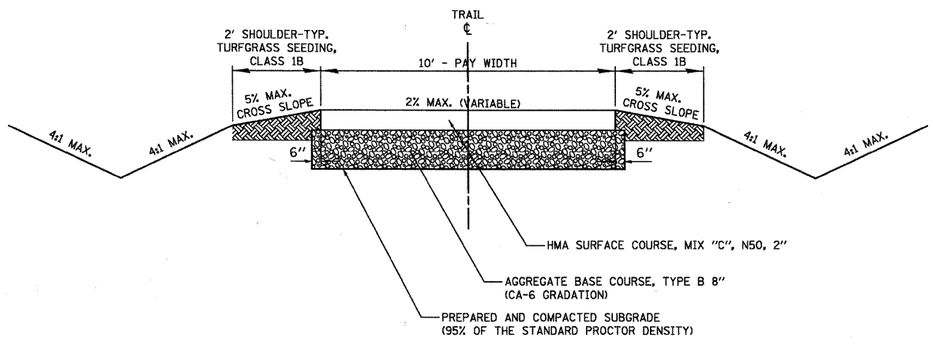

NOTES:

1. EACH LAYER OF PLACED STONE SHALL BE LEVELED AND THE FINAL COURSE COMPACTED TO 95% COMPACTION.

2. FINAL GRADE OF HMA TRAIL SHALL BE CONSTRUCTED WITH A MAXIMUM CROSS SLOPE OF 2%.

PROPOSED TYPICAL SECTION NO. 2
HOT MIX ASPHALT TRAIL

ALIGNMENT A
STA. 100+00.0 TO STA. 127+92.7
STA. 134+24.6 TO STA. 134+30.9

* ALIGNMENT B
STA. 200+00.0 TO STA. 203+41.2
STA. 204+41.2 TO STA. 207+59.2

ALIGNMENT C
STA. 50+81.3 TO STA. 54+62.2

ALIGNMENT D
STA. 300+72.4 TO STA. 302+97.4
STA. 310+02.5 TO STA. 313+01.3

* OMIT BOARDWALK STRUCTURE
STA. 203+41.2 TO STA. 204+41.2

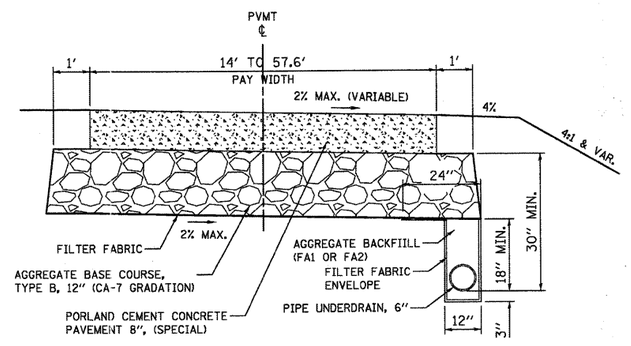

PROPOSED TYPICAL SECTION NO. 4
PORTLAND CEMENT CONCRETE PAVEMENT, 8" SPECIAL WITH UNDERDRAIN

ALIGNMENT E
STA. 12+19.9 TO STA. 15+34.8

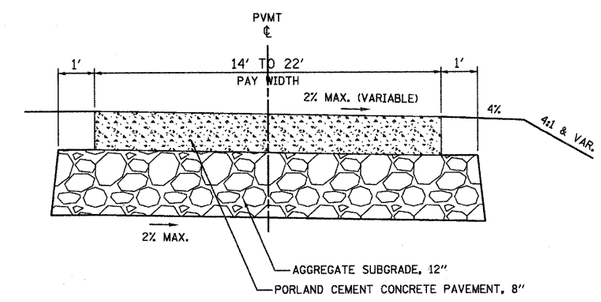

PROPOSED TYPICAL SECION NO. 5
PORTLAND CEMENT CONCRETE PAVEMENT, 8"

ALIGNMENT E
STA. 11+72.8 TO STA. 12+19.9
STA. 15+34.8 TO STA. 15+79.9

HOT-MIX ASPHALT MIXTURE REQUIREMENTS	
MIXTURE TYPE	AIR VOIDS @ Ndes
TRAIL	
HOT-MIX ASPHALT SURFACE COURSE, MIX "C", N50 (IL-9.5 mm), 2"	4% @ 50 GYR.
HMA SHOULDERS	
HOT-MIX ASPHALT SHOULDER (HMA BINDER IL-19 mm), 6"	2% @ 30 GYR.

1. THE UNIT WEIGHT USED TO CALCULATE ALL HMA SURFACE MIXTURE QUANTITIES IS 112 LB/SQYD/IN.
2. THE "AC TYPE" FOR POLYMERIZED HMA MIXES SHALL BE "SBS/SBR PG 70-22" AND FOR NON-POLYMERIZED HMA THE "AC TYPE" SHALL BE "PG 64-22" UNLESS MODIFIED BY DISTRICT ONE SPECIAL PROVISIONS. FOR "PERCENT OF RAP" SEE DISTRICT ONE SPECIAL PROVISIONS.

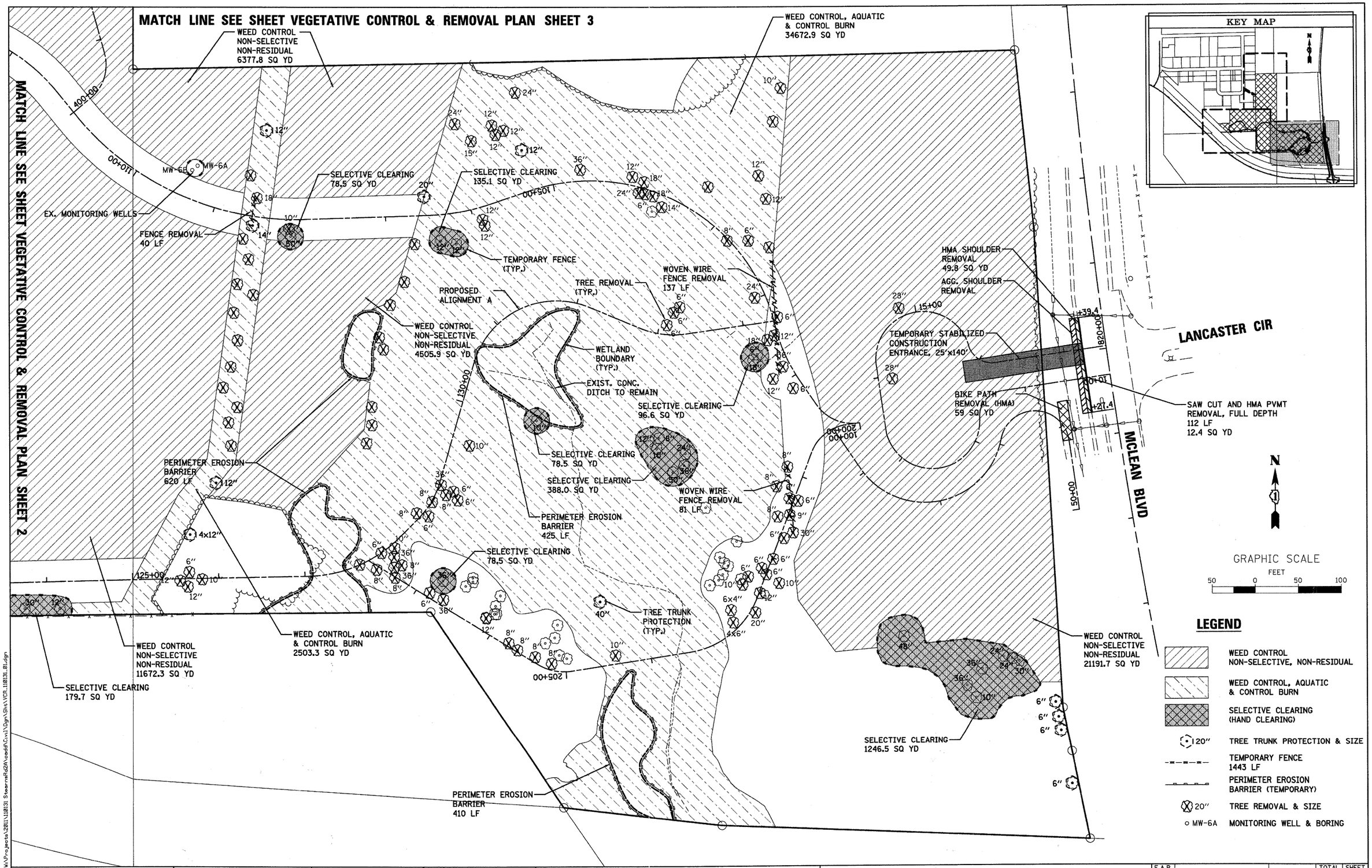

FILE NAME = W:\Projects\2011\110131 StearnsRd2A\cadd\Civil\Dgn\Sht\VCR_110131_01.dgn

WILLS BURKE KELSEY ASSOCIATES LTD. 116 West Main Street, Suite 201 St. Charles, Illinois 60174	USER NAME = nparris	DESIGNED - PJF	REVISED -	STATE OF ILLINOIS DEPARTMENT OF TRANSPORTATION	MCLEAN BLVD ENVIRONMENTAL ADAPTIVE MANAGEMENT PLANS VEGATATIVE CONTROL & REMOVAL PLAN
		DRAWN - NDP	REVISED -		
	PLOT SCALE = 1"=50'	CHECKED - PDK	REVISED -		
	PLOT DATE = 8/30/2011	DATE - 8/29/11	REVISED -		SCALE: 1"=50' SHEET NO. 1 OF 3 SHEETS STA. TO STA.

F.A.P. RTE.	SECTION	COUNTY	TOTAL SHEETS	SHEET NO.
361	06-00214-11-LS	KANE	54	11
		CONTRACT NO.63638		
FED. ROAD DIST. NO.	ILLINOIS	FED. AID PROJECT		

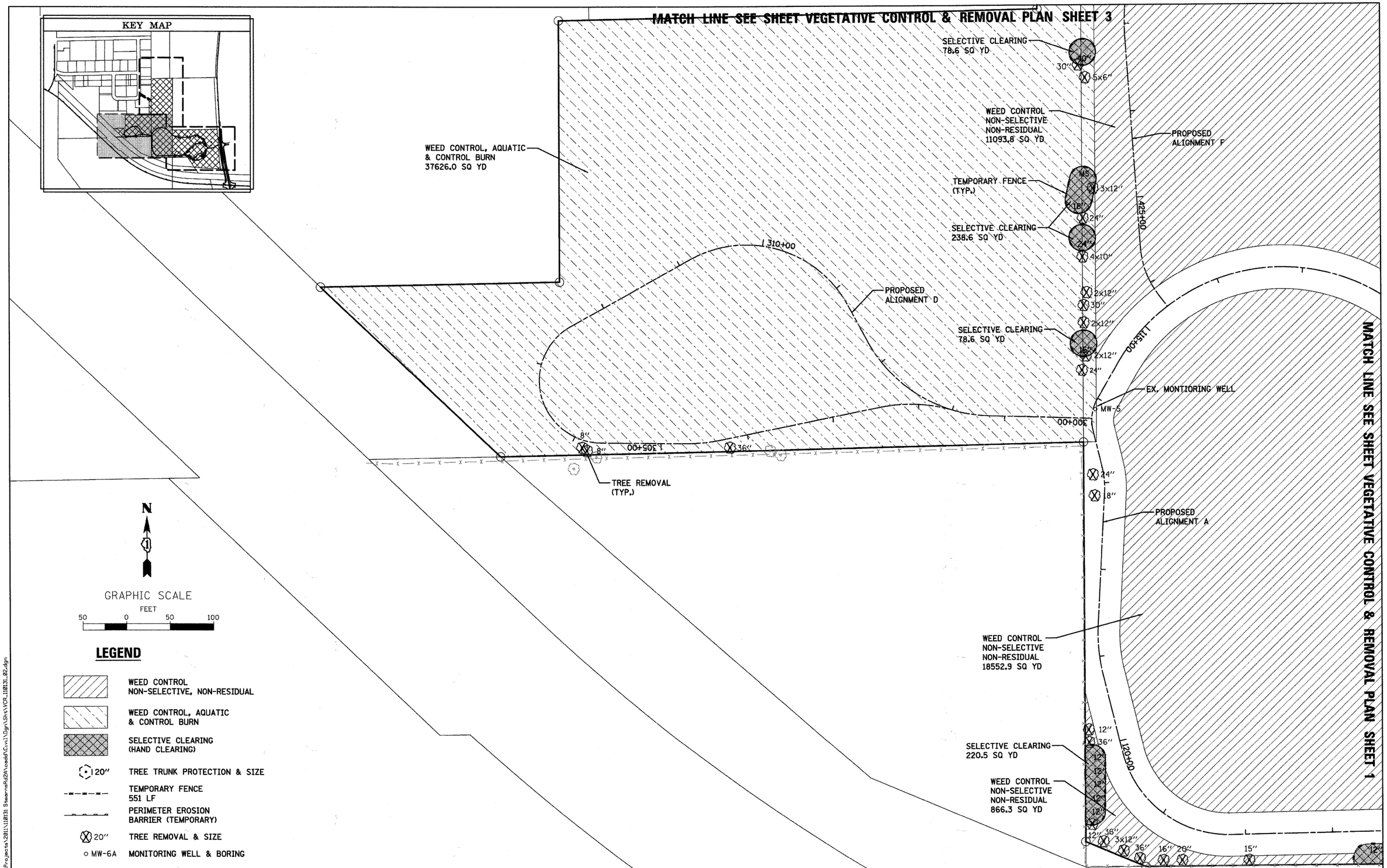

FILE NAME = W:\Projects\2011\110131 StearnsRd2A\cadd\Civil\Dgn\Sht\VCR_110131_02.dgn

WILLS BURKE KELSEY ASSOCIATES LTD. 116 West Main Street, Suite 201 St. Charles, Illinois 60174	USER NAME = nparris	DESIGNED - PJF	REVISED -
		DRAWN - NDP	REVISED -
	PLOT SCALE = 1"=50'	CHECKED - PDK	REVISED -
	PLOT DATE = 8/30/2011	DATE - 8/29/11	REVISED -

STATE OF ILLINOIS
DEPARTMENT OF TRANSPORTATION

MCLEAN BLVD ENVIRONMENTAL ADAPTIVE MANAGEMENT PLANS
VEGATATIVE CONTROL & REMOVAL PLAN

SCALE: 1"=50' | SHEET NO. 2 OF 3 SHEETS | STA. TO STA.

F.A.P. RTE.	SECTION	COUNTY	TOTAL SHEETS	SHEET NO.
361	06-00214-11-LS	KANE	54	12
		CONTRACT NO.63638		
FED. ROAD DIST. NO.	ILLINOIS	FED. AID PROJECT		

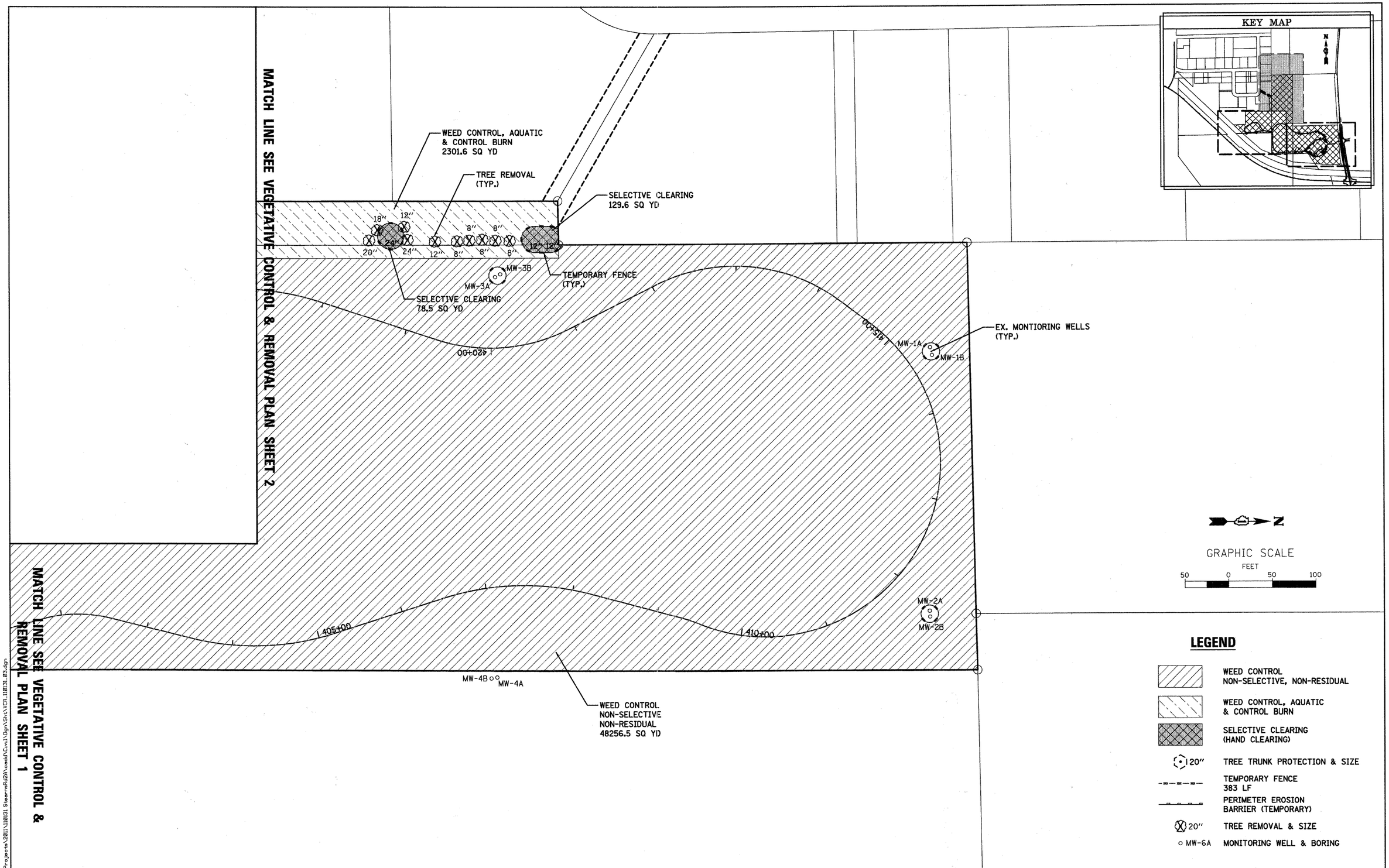

FILE NAME = W:\Projects\2011\10131 Stearns&Rd2A\cadd\Civil\Dgn\Sht\VCR_10131_03.dgn

WILLS BURKE KELSEY ASSOCIATES LTD.
116 West Main Street, Suite 201
St. Charles, Illinois 60174

USER NAME = nparris	DESIGNED - PJF	REVISED -	
	DRAWN - NDP	REVISED -	
PLOT SCALE = 1"=50'	CHECKED - PDK	REVISED -	
PLOT DATE = 8/30/2011	DATE - 8/29/11	REVISED -	

STATE OF ILLINOIS
DEPARTMENT OF TRANSPORTATION

MCLEAN BLVD ENVIRONMENTAL ADAPTIVE MANAGEMENT PLANS
VEGATATIVE CONTROL & REMOVAL PLAN

SCALE: 1"=50' | SHEET NO. 3 OF 3 SHEETS | STA. | TO STA.

F.A.P. RTE.	SECTION	COUNTY	TOTAL SHEETS	SHEET NO.
361	06-00214-11-LS	KANE	54	13
		CONTRACT NO.63638		
FED. ROAD DIST. NO.	ILLINOIS	FED. AID PROJECT		

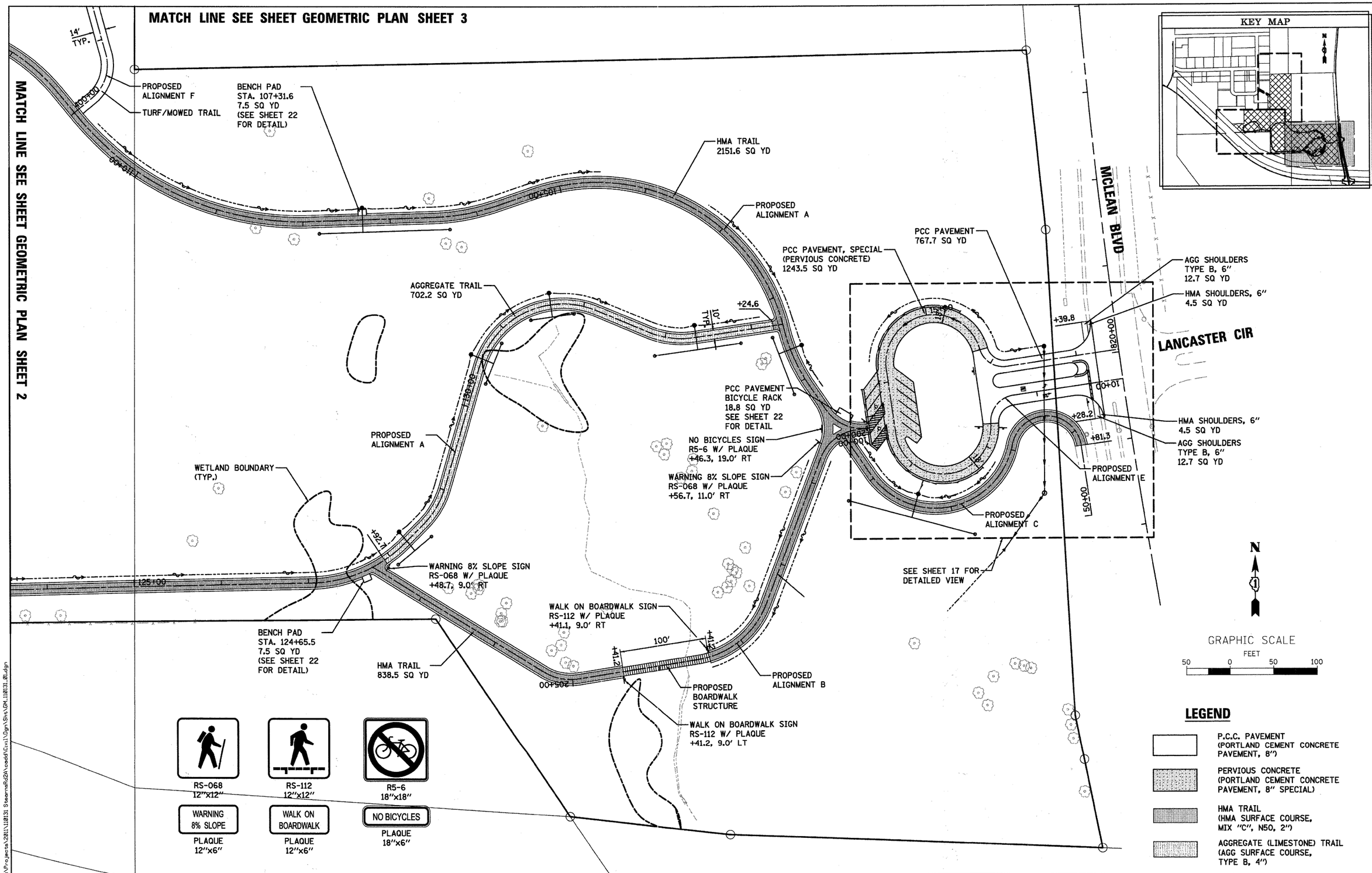

FILE NAME = W:\Projects\2011\110131 StearnsRd2A\cadd\Civil\Dgn\Sht\GM_110131_01.dgn

WILLS BURKE KELSEY ASSOCIATES LTD. 116 West Main Street, Suite 201 St. Charles, Illinois 60174	USER NAME = nparris	DESIGNED - PJF	REVISED -	STATE OF ILLINOIS DEPARTMENT OF TRANSPORTATION	MCLEAN BLVD ENVIRONMENTAL ADAPTIVE MANAGEMENT PLANS GEOMETRIC PLAN
		DRAWN - NDP	REVISED -		
	PLOT SCALE = 1"=50'	CHECKED - PDK	REVISED -		
	PLOT DATE = 8/30/2011	DATE - 8/29/11	REVISED -		SCALE: 1"=50' SHEET NO. 1 OF 3 SHEETS STA. TO STA.

F.A.P. RTE.	SECTION	COUNTY	TOTAL SHEETS	SHEET NO.
361	06-00214-11-LS	KANE	54	14
		CONTRACT NO.63638		
FED. ROAD DIST. NO.	ILLINOIS	FED. AID PROJECT		

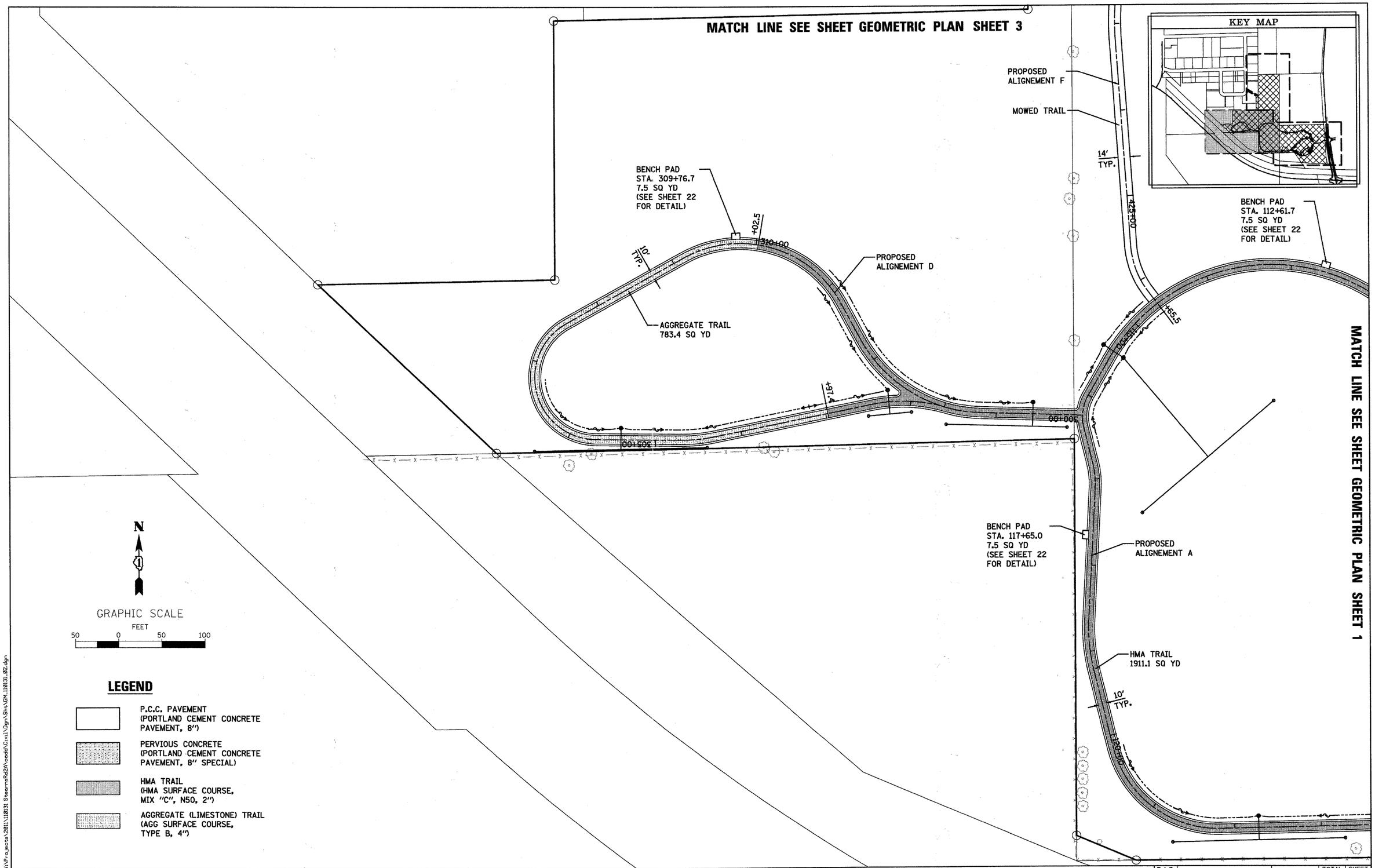

FILE NAME = W:\Projects\2011\110131 StearnsRd2A\cadd\Civil\Dgn\Sht\GM_110131_02.dgn

WILLS BURKE KELSEY ASSOCIATES LTD. 116 West Main Street, Suite 201 St. Charles, Illinois 60174	USER NAME = nparris	DESIGNED - PJF	REVISED -	STATE OF ILLINOIS DEPARTMENT OF TRANSPORTATION	MCLEAN BLVD ENVIRONMENTAL ADAPTIVE MANAGEMENT PLANS GEOMETRIC PLAN	F.A.P. RTE. 361	SECTION 06-00214-11-LS	COUNTY KANE	TOTAL SHEETS 54 / SHEET NO. 15
		DRAWN - NDP	REVISED -					CONTRACT NO.63638	
	PLOT SCALE = 1"=50'	CHECKED - PDK	REVISED -		SCALE: 1"=50' / SHEET NO. 2 OF 3 SHEETS / STA. TO STA.	FED. ROAD DIST. NO.	ILLINOIS	FED. AID PROJECT	
	PLOT DATE = 8/30/2011	DATE - 8/29/11	REVISED -						

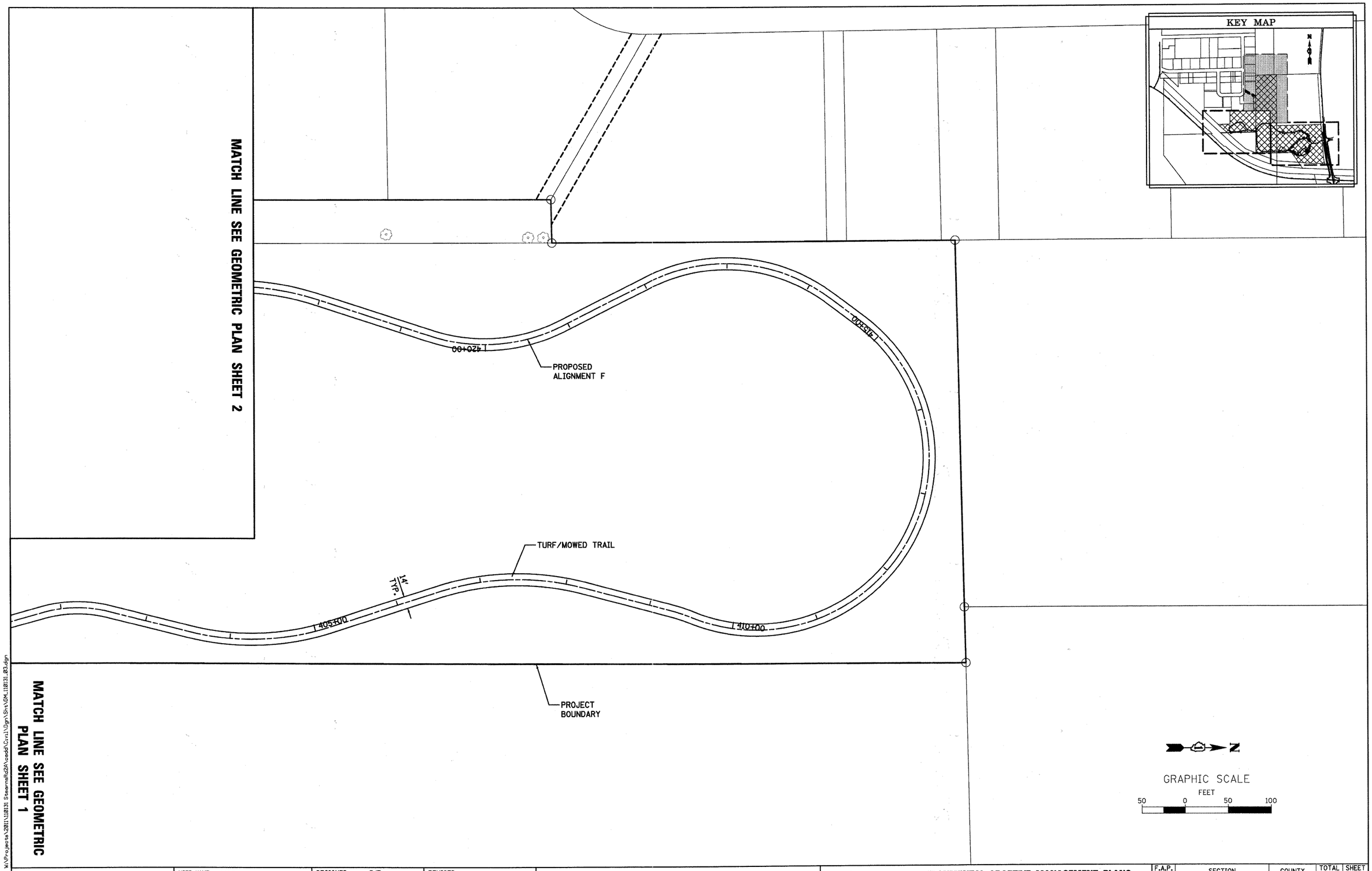

FILE NAME = W:\Projects\2011\110131 StearnsRd2A\cadd\Civil\Dgn\Sht\GM_110131_03.dgn

WILLS BURKE KELSEY ASSOCIATES LTD. 116 West Main Street, Suite 201 St. Charles, Illinois 60174	USER NAME = nparris	DESIGNED - PJF	REVISED -	STATE OF ILLINOIS DEPARTMENT OF TRANSPORTATION	MCLEAN BLVD ENVIRONMENTAL ADAPTIVE MANAGEMENT PLANS GEOMETRIC PLAN	F.A.P. RTE. 361	SECTION 06-00214-11-LS	COUNTY KANE	TOTAL SHEETS 54	SHEET NO. 16
		DRAWN - NDP	REVISED -					CONTRACT NO.63638		
	PLOT SCALE = 1"=20'	CHECKED - PDK	REVISED -		SCALE: 1"=20' SHEET NO. 3 OF 3 SHEETS STA. TO STA.	FED. ROAD DIST. NO.	ILLINOIS	FED. AID PROJECT		
	PLOT DATE = 8/30/2011	DATE - 8/29/11	REVISED -							

ENTRANCE & PARKING LOT LAYOUT POINTS			
POINT NO.	NORTHING	EASTING	ELEVATION
P1	1935710.761	988688.146	MATCH
P2	1935736.007	988654.071	775.34
P3	1935725.660	988584.354	778.85
P4	1935704.891	988567.315	779.31
P5	1935638.437	988512.820	778.49
P6	1935686.126	988441.326	777.66
P7	1935676.236	988428.796	777.39
P8	1935681.644	988421.602	777.27
P9	1935713.150	988417.140	777.27
P10	193574.655	988412.677	777.27
P11	1935768.935	988429.320	777.66
P12	1935771.898	988447.146	778.04
P13	1935752.733	988469.708	778.41
P14	1935721.228	988474.170	778.41
P15	1935689.722	988478.633	778.41
P16	1935682.529	988473.224	778.34
P17	1935686.857	988459.866	778.07
P18	1935657.004	988514.106	778.88
P19	1935708.190	988548.938	779.64
P20	1935781.123	988538.607	779.68
P21	1935820.440	988488.446	778.89
P22	1935837.917	988483.386	778.51
P23	1935791.623	988554.776	779.32
P24	1935777.138	988576.998	778.85
P25	1935761.594	988567.633	779.39
P26	1935745.767	988569.982	779.52
P27	1935757.883	988651.607	775.75
P28	1935773.709	988649.258	775.59
P29	1935787.558	988647.202	775.32
P30	1935821.203	988672.534	MATCH

ENTRANCE & PARKING LOT RADII POINTS		
POINT NO.	NORTHING	EASTING
C1	1935706.333	988658.475
C2	1935705.876	988587.290
C3	1935701.739	988503.392
C4	1935774.672	988493.062
C5	1935796.921	988574.062
C6	1935817.233	988642.798
C7	1935753.681	988568.807
C8	1935765.796	988650.432

NOTES:

1. ALL PAVEMENT MARKINGS SHALL BE PAINT.
2. ALL SIGNS SHALL BE MOUNTED ON TELESCOPING SIGN SUPPORTS PER STD. 728001-01.

LEGEND

- P.C.C. PAVEMENT (PORTLAND CEMENT CONCRETE PAVEMENT, 8")
- PERVIOUS CONCRETE (PORTLAND CEMENT CONCRETE PAVEMENT, 8" SPECIAL)
- HMA TRAIL (HMA SURFACE COURSE, MIX "C", N50, 2")
- AGGREGATE (LIMESTONE) TRAIL (AGG SURFACE COURSE, TYPE B, 4")

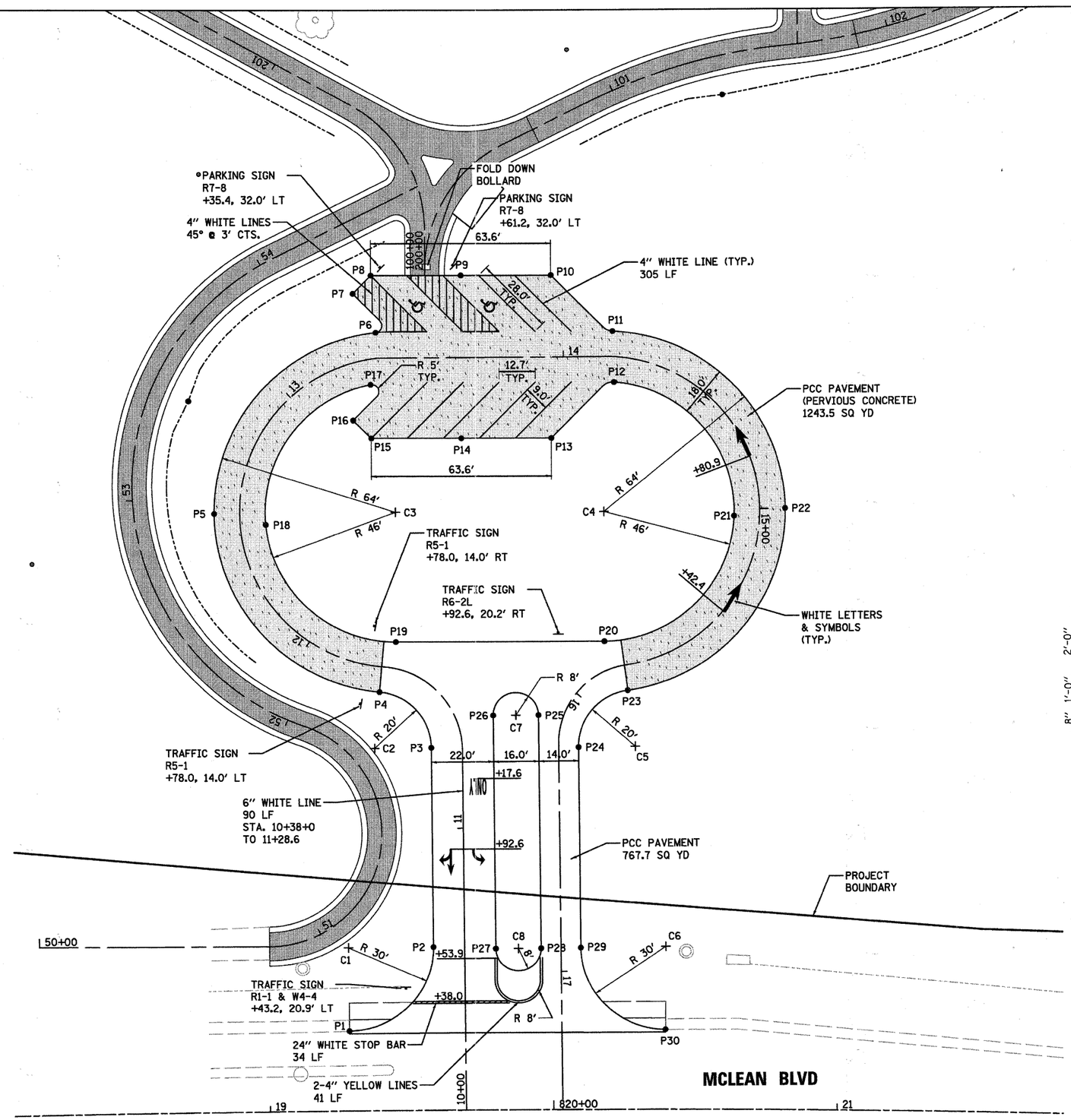

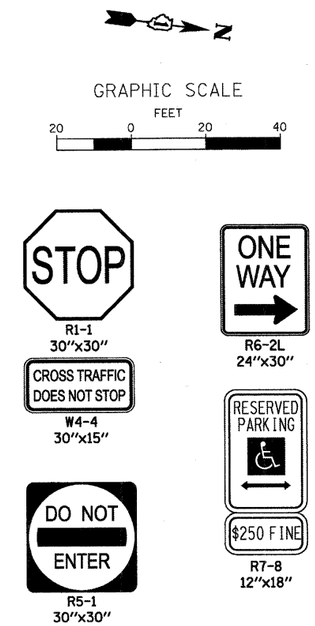

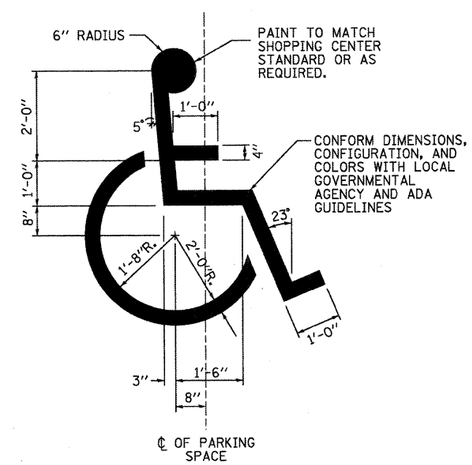

HANDICAPPED SYMBOL DETAIL

FILE NAME = W:\Projects\2011\118131 Steers\Rt2A\cadd\Civil\Dgn\Sht\GM_118131_B4.dgn

WILLS BURKE KELSEY ASSOCIATES LTD. 116 West Main Street, Suite 201 St. Charles, Illinois 60174	USER NAME = nparris	DESIGNED - PJF	REVISED -	STATE OF ILLINOIS DEPARTMENT OF TRANSPORTATION	MCLEAN BLVD ENVIRONMENTAL ADAPTIVE MANAGEMENT PLANS GEOMETRIC PLAN – ENTRANCE
		DRAWN - NDP	REVISED -		
	PLOT SCALE = 1"=20'	CHECKED - PDK	REVISED -		
	PLOT DATE = 8/30/2011	DATE - 8/29/11	REVISED -		SCALE: 1"=20' SHEET NO. 17 OF 54 SHEETS STA. TO STA.

F.A.P. RTE.	SECTION	COUNTY	TOTAL SHEETS	SHEET NO.
361	08-00214-11-LS	KANE	54	17
		CONTRACT NO.63638		
FED. ROAD DIST. NO.	ILLINOIS	FED. AID PROJECT		

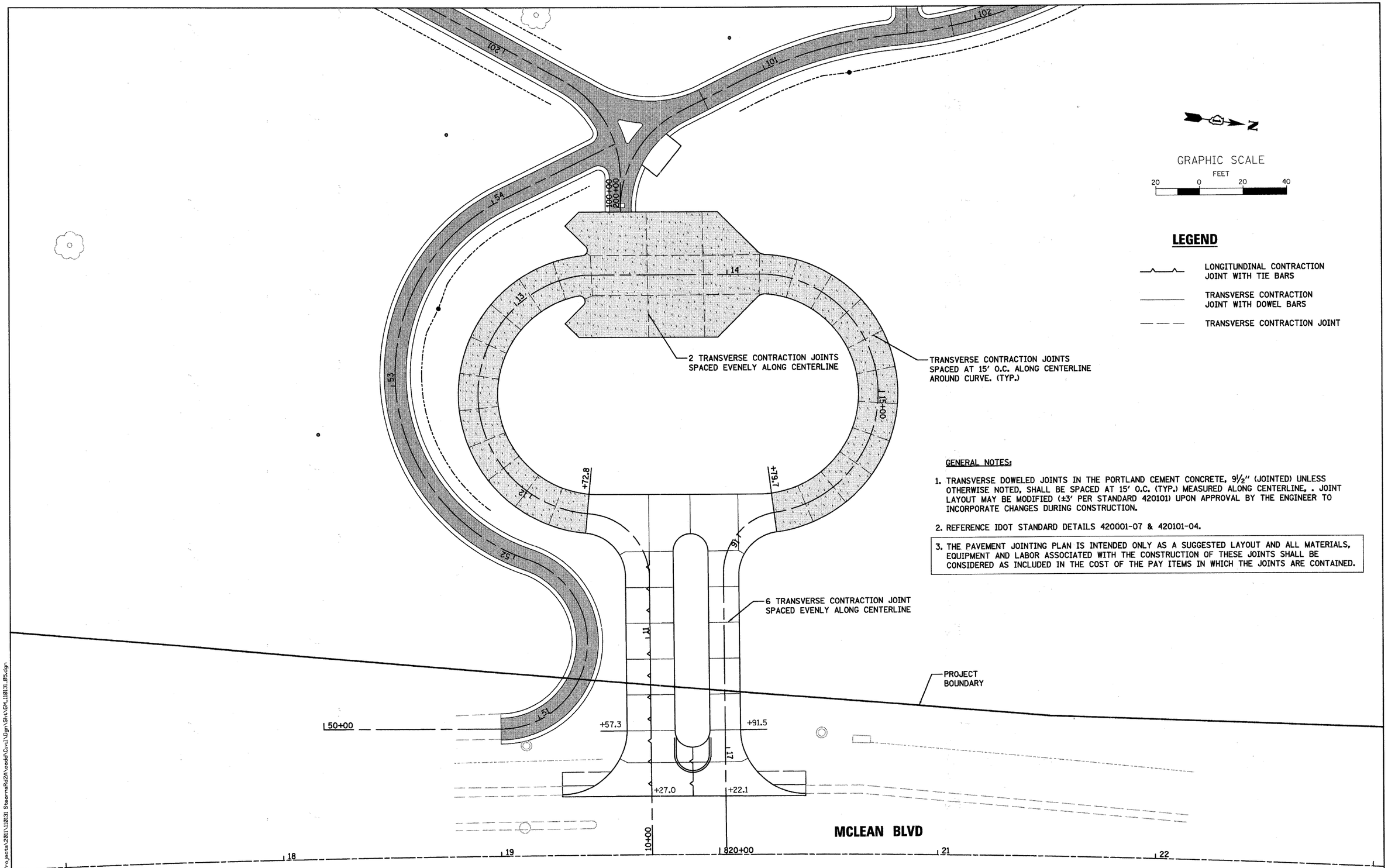

GENERAL NOTES:

1. TRANSVERSE DOWELED JOINTS IN THE PORTLAND CEMENT CONCRETE, 9½" (JOINTED) UNLESS OTHERWISE NOTED, SHALL BE SPACED AT 15' O.C. (TYP.) MEASURED ALONG CENTERLINE, . JOINT LAYOUT MAY BE MODIFIED (±3' PER STANDARD 420101) UPON APPROVAL BY THE ENGINEER TO INCORPORATE CHANGES DURING CONSTRUCTION.
2. REFERENCE IDOT STANDARD DETAILS 420001-07 & 420101-04.
3. THE PAVEMENT JOINTING PLAN IS INTENDED ONLY AS A SUGGESTED LAYOUT AND ALL MATERIALS, EQUIPMENT AND LABOR ASSOCIATED WITH THE CONSTRUCTION OF THESE JOINTS SHALL BE CONSIDERED AS INCLUDED IN THE COST OF THE PAY ITEMS IN WHICH THE JOINTS ARE CONTAINED.

FILE NAME = W:\Projects\2011\110131 SteamsRd2A\cadd\Civil\Dgn\Sht\GM_110131_05.dgn

WILLS BURKE KELSEY ASSOCIATES LTD. 116 West Main Street, Suite 201 St. Charles, Illinois 60174	USER NAME = nparris	DESIGNED - PJF	REVISED -	STATE OF ILLINOIS DEPARTMENT OF TRANSPORTATION	MCLEAN BLVD ENVIRONMENTAL ADAPTIVE MANAGEMENT PLANS P.C.C. PAVEMENT JOINTING PLAN	F.A.P. RTE. 361	SECTION 06-00214-11-LS	COUNTY KANE	TOTAL SHEETS 54 / SHEET NO. 18
		DRAWN - NDP	REVISED -					CONTRACT NO.63638	
	PLOT SCALE = 1"=50'	CHECKED - PDK	REVISED -		SCALE: 1"=50' / SHEET NO. 18 OF 54 SHEETS / STA. TO STA.	FED. ROAD DIST. NO.	ILLINOIS	FED. AID PROJECT	
	PLOT DATE = 8/30/2011	DATE - 8/29/11	REVISED -						

MATCH LINE SEE SHEET GRADING AND DRAINAGE PLAN SHEET 3

MATCH LINE SEE SHEET GRADING AND DRAINAGE PLAN SHEET 2

KEY MAP

PROPOSED 14' TURF MOWED TRAIL

EX. MONITORING WELLS

TEMP. FENCE (TYP.)

12" PERF CPE 50 LF @ 0.00%

LEVEL SPREADER T CONNECTION INV 790.42

WETLAND BOUNDARY (TYP.)

12" PERF CPE 28 LF @ 0.50%

STORM INLET TY A & 8 GR RIM 792.56 INV 790.56

PROPOSED ALIGNMENT A

12" PERF CPE 100 LF @ 0.00%

TREE TRUNK PROTECTION (TYP.)

PROPOSED 10' TRAIL

STORM INLET TY A & 8 GR RIM 771.68 INV 769.68

12" PERF CPE 28 LF @ 0.50%

12" PERF CPE 50 LF @ 0.00%

12" PERF CPE 25 LF @ 0.00%

12" PERF CPE 25 LF @ 0.00%

12" PERF CPE 28 LF @ 0.50%

6319.58 SF

12" PERF CPE 25 LF @ 0.00%

LEVEL SPREADER T CONNECTION INV 769.42

STORM INLET TY A & 8 GR RIM 772.40 INV 770.40

LEVEL SPREADER T CONNECTION INV 769.54

LEVEL SPREADER T CONNECTION INV 770.26

12" PERF CPE 25 LF @ 0.00%

PROPOSED ALIGNMENT A

STORM INLET TY A & 8 GR RIM 773.98 INV 771.98

CLEANOUT (TYP.)

12" PERF CPE 25 LF @ 0.00%

12" PERF CPE 28 LF @ 0.50%

LEVEL SPREADER T CONNECTION INV 771.84

12" PERF CPE 25 LF @ 0.00%

STORM INLET TY A & 8 GR RIM 770.56 INV 769.56

12" PERF CPE 28 LF @ 0.50%

12" PERF CPE 50 LF @ 0.00%

12" PERF CPE 20 LF @ 0.00%

STORM INLET TY A & 8 GR RIM 772.50 INV 770.50

LEVEL SPREADER T CONNECTION INV 770.36

12" PERF CPE 28 LF @ 0.50%

12" PERF CPE 50 LF @ 0.00%

12" PERF CPE 100 LF @ 0.00%

STORM INLET TY A & 8 GR RIM 772.34 INV 770.34

12" PERF CPE 28 LF @ 0.50%

LEVEL SPREADER T CONNECTION INV 770.20

12" PERF CPE 100 LF @ 0.00%

PIPE UNDERDRAINS, 6" 475 LF

STORM INLET TY A & 8 GR RIM 775.90 INV 773.68

MCLEAN BLVD

LANCASTER CIR

12" CL A, TY1 (RCP) STORM SEWER 169 LF @ 1.0% T.B. 11 CU YD

STORM MANHOLE TY A4 & TY 1 F&L CL RIM 778.50 INV 771.79 W INV 771.99 N

12" CL A, TY1 (RCP) STORM SEWER 81 LF @ 1.0%

12" PRECAST REINFORCED CONCRETE END SECTION W/ 10 SQ YD RR3 +72.0, 69.5' LT INV 771.18

PROPOSED ALIGNMENT C

SWALE TO BE CONSTRUCTED FROM END SECTION TO AN ELEV. OF 770 W/ 4' BOTTOM AND 4:1 MAX. SIDE SLOPES (APPROX. DIST. 94'±)

PROPOSED ALIGNMENT B

DISKING, 6" MIN. (TYP.)

PROPOSED 10' BOARDWALK STRUCTURE

PROJECT BOUNDARY

N

GRAPHIC SCALE FEET 50 0 50 100

NOTES:

1. ALL LEVEL SPREADER SYSTEMS SHALL HAVE A CLEANOUT AT THE END OF EACH PERFORATED CPE PIPE. SEE SHEET 23 FOR DETAIL.
2. RIPRAP (RR3) PLACED AT THE END SECTION SHALL BE INCLUDED IN THE COST OF PRECAST REINFORCED CONCRETE END SECTION, 12".
3. THE SWALE CONSTRUCTED AT THE OUTLET OF THE END SECTION SHALL BE PAID FOR AS EARTH EXCAVATION.

LEGEND

- P.C.C. PAVEMENT (PORTLAND CEMENT CONCRETE PAVEMENT, 8")
- PERVIOUS CONCRETE (PORTLAND CEMENT CONCRETE PAVEMENT, 8" SPECIAL)
- HMA TRAIL (HMA SURFACE COURSE, MIX "C", N50, 2")
- AGGREGATE (LIMESTONE) TRAIL (AGG SURFACE COURSE, TYPE B, 4")
- DISKING, 6" MIN. (7.544 ARCE)
- 124" TREE TRUNK PROTECTION & SIZE
- TEMPORARY FENCE
- PIPE UNDERDRAINS, 6"
- CLEANOUT
- STORM INLET

FILE NAME = W:\Projects\2011\10131 Steermafd2A\cadd\Civil\Dgn\Sht\GR_UT_110131.01.dgn

WILLS BURKE KELSEY ASSOCIATES LTD.
116 West Main Street, Suite 201
St. Charles, Illinois 60174

USER NAME = nparris	DESIGNED - PJF	REVISED -	
	DRAWN - NDP	REVISED -	
PLOT SCALE = 1"=50'	CHECKED - PDK	REVISED -	
PLOT DATE = 8/30/2011	DATE - 8/29/11	REVISED -	

STATE OF ILLINOIS
DEPARTMENT OF TRANSPORTATION

MCLEAN BLVD ENVIRONMENTAL ADAPTIVE MANAGEMENT PLANS
GRADING & DRAINAGE PLAN

SCALE: 1"=50' | SHEET NO. 1 OF 3 SHEETS | STA. TO STA.

F.A.P. RTE.	SECTION	COUNTY	TOTAL SHEETS	SHEET NO.
361	06-00214-11-LS	KANE	54	19
		CONTRACT NO.63638		
FED. ROAD DIST. NO.	ILLINOIS	FED. AID PROJECT		

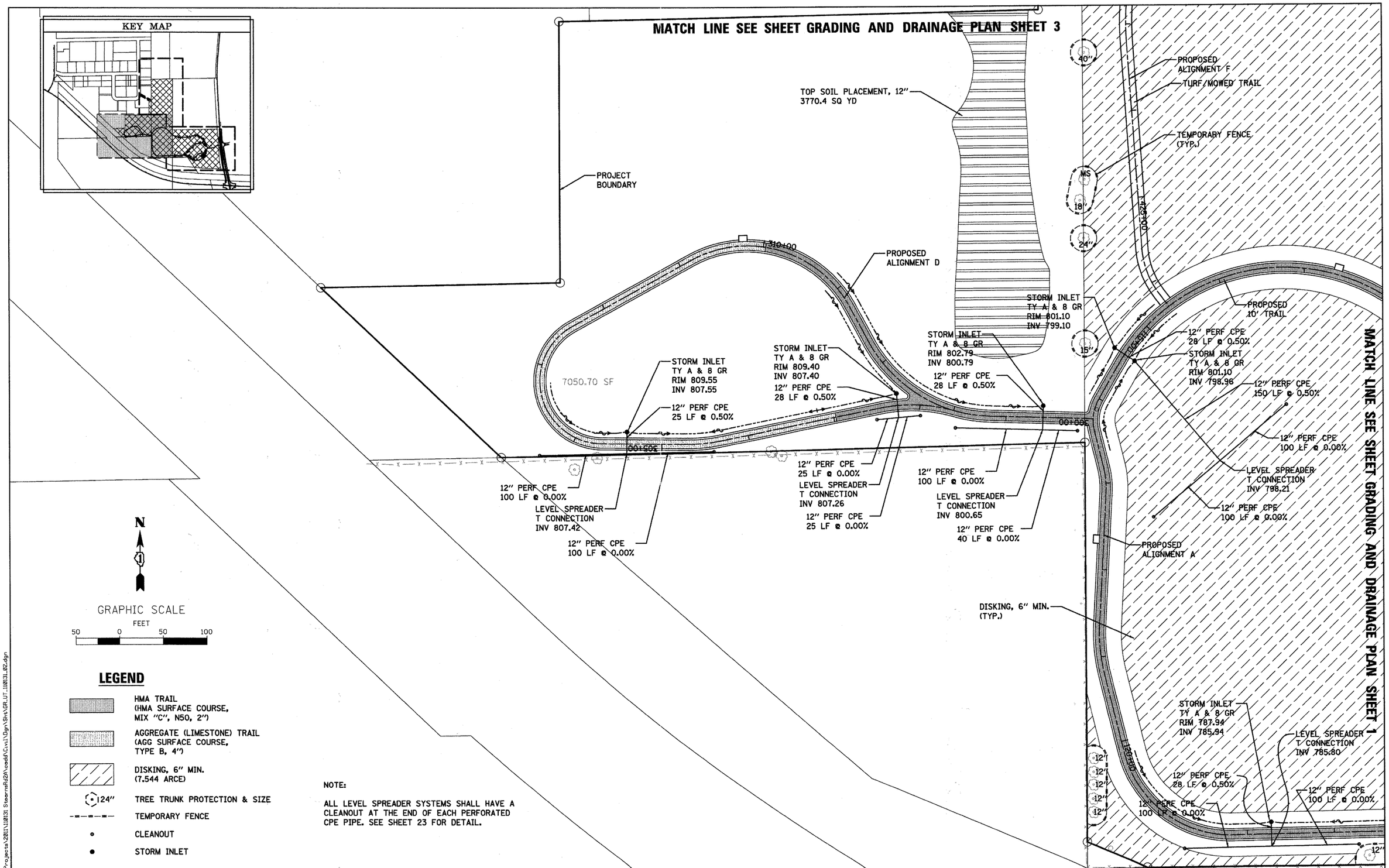

LEGEND

- HMA TRAIL (HMA SURFACE COURSE, MIX "C", N50, 2")
- AGGREGATE (LIMESTONE) TRAIL (AGG SURFACE COURSE, TYPE B, 4")
- DISKING, 6" MIN. (7.544 ARCE)
- 24" TREE TRUNK PROTECTION & SIZE
- TEMPORARY FENCE
- CLEANOUT
- STORM INLET

NOTE:

ALL LEVEL SPREADER SYSTEMS SHALL HAVE A CLEANOUT AT THE END OF EACH PERFORATED CPE PIPE. SEE SHEET 23 FOR DETAIL.

FILE NAME = W:\Projects\2011\110131 StearnsRd2A\cadd\Civil\Dgn\Sht\GR_UT_110131_02.dgn

WILLS BURKE KELSEY ASSOCIATES LTD. 116 West Main Street, Suite 201 St. Charles, Illinois 60174	USER NAME = nparris	DESIGNED - PJF	REVISED -
		DRAWN - NDP	REVISED -
	PLOT SCALE = 1"=50'	CHECKED - PDK	REVISED -
	PLOT DATE = 8/30/2011	DATE - 8/29/11	REVISED -

STATE OF ILLINOIS
DEPARTMENT OF TRANSPORTATION

MCLEAN BLVD ENVIRONMENTAL ADAPTIVE MANAGEMENT PLANS
GRADING & DRAINAGE PLAN

SCALE: 1"=50' | SHEET NO. 2 OF 3 SHEETS | STA. | TO STA.

F.A.P. RTE.	SECTION	COUNTY	TOTAL SHEETS	SHEET NO.
361	06-00214-11-LS	KANE	54	20
		CONTRACT NO.63638		
FED. ROAD DIST. NO.	ILLINOIS	FED. AID PROJECT		

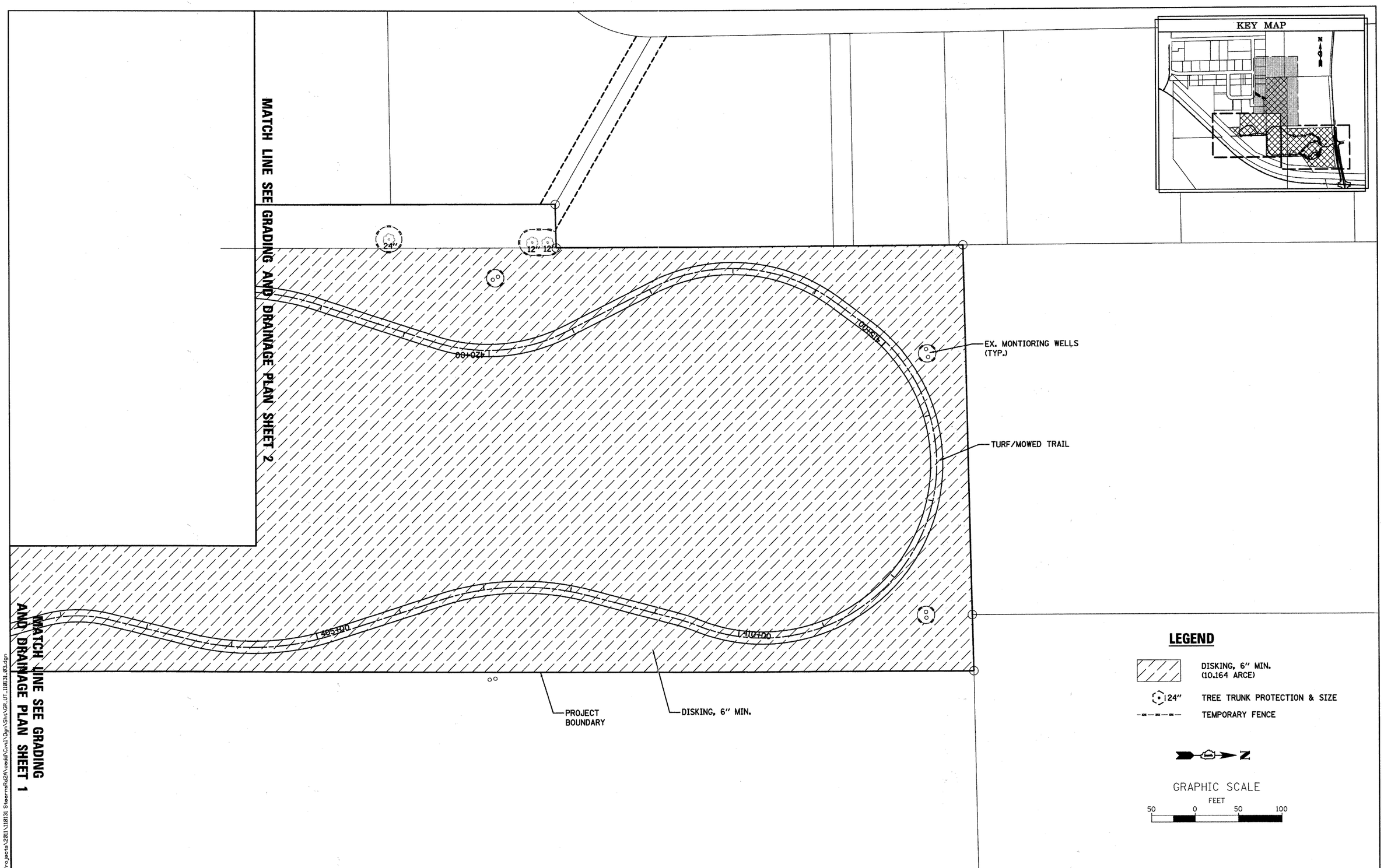

FILE NAME = W:\Projects\2011\110131 StearnsRd2A\cadd\Civil\Dgn\Sht\GR_UT_110131_03.dgn

WILLS BURKE KELSEY ASSOCIATES LTD. 116 West Main Street, Suite 201 St. Charles, Illinois 60174	USER NAME = nparris	DESIGNED - PJF	REVISED -	STATE OF ILLINOIS DEPARTMENT OF TRANSPORTATION	MCLEAN BLVD ENVIRONMENTAL ADAPTIVE MANAGEMENT PLANS GRADING & DRAINAGE PLAN
		DRAWN - NDP	REVISED -		
	PLOT SCALE = 1"=50'	CHECKED - PDK	REVISED -		
	PLOT DATE = 8/30/2011	DATE - 8/29/11	REVISED -		SCALE: 1"=50' SHEET NO. 3 OF 3 SHEETS STA. TO STA.

F.A.P. RTE.	SECTION	COUNTY	TOTAL SHEETS	SHEET NO.
361	06-00214-11-LS	KANE	54	21
		CONTRACT NO.63638		
FED. ROAD DIST. NO.	ILLINOIS	FED. AID PROJECT		

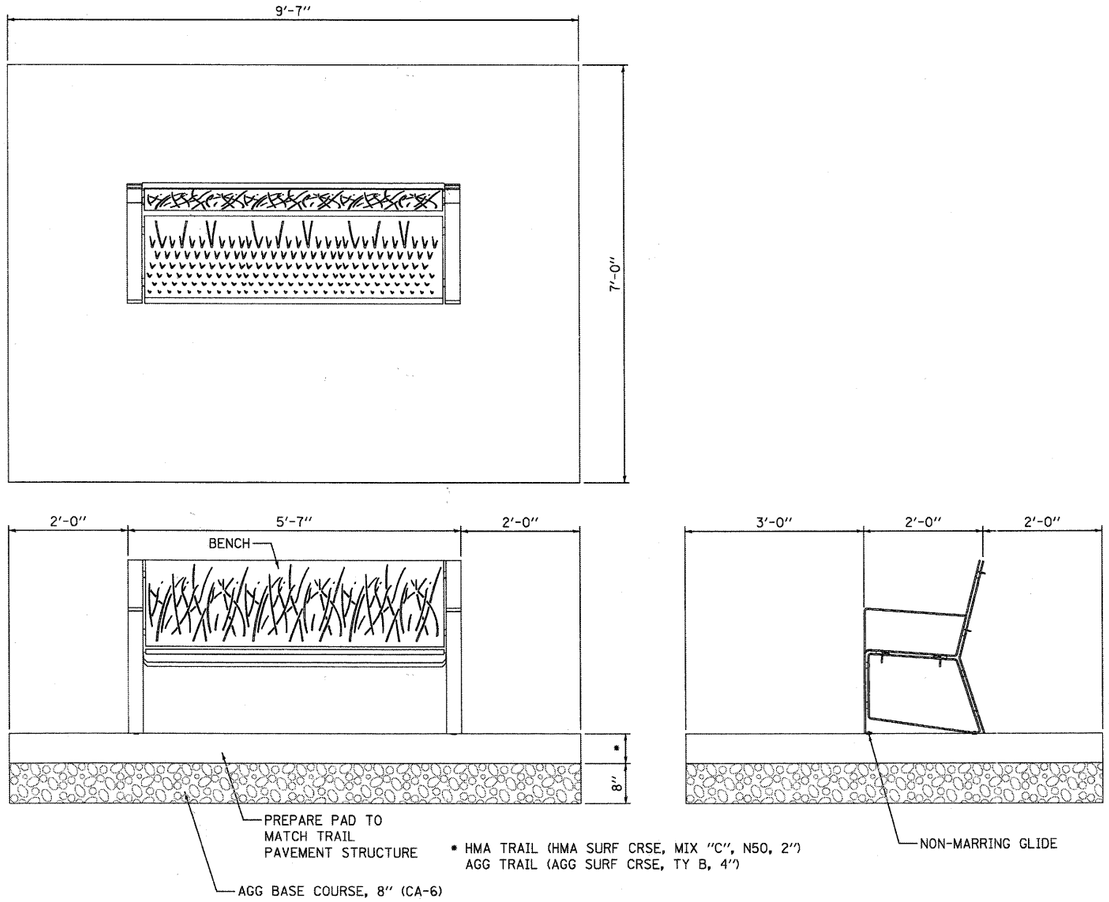

PARK BENCH AND PAD DETAIL

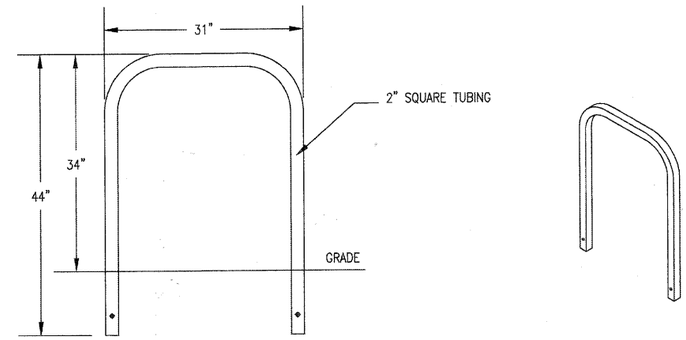

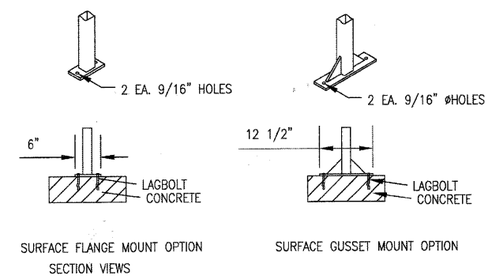

NOTES:

1. INSTALL BIKE RACKS ACCORDING TO MANUFACTURER'S SPECIFICATIONS.
2. COLOR SHALL BE BLACK (FINISH), SEE MANUFACTURER'S SPECIFICATIONS.
3. SEE SITE PLAN FOR LOCATION.

BICYCLE RACK DETAIL

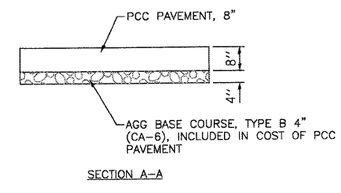

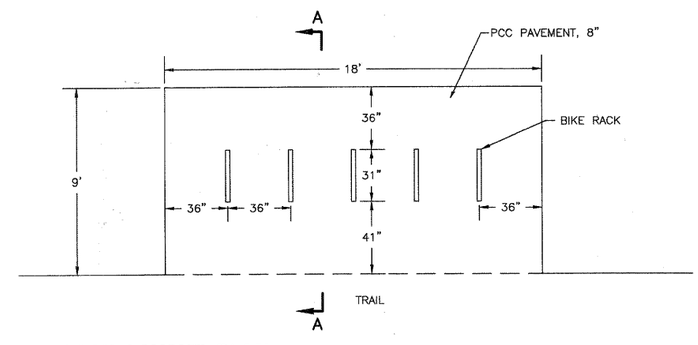

BICYCLE RACK LAYOUT PLAN

FILE NAME = W:\Projects\2011\110131 StearnsRd2A\cadd\Civil\Dgn\Sht\D_GGD_110131_01.dgn

WILLS BURKE KELSEY ASSOCIATES LTD. 116 West Main Street, Suite 201 St. Charles, Illinois 60174	USER NAME = nparris	DESIGNED - PJF	REVISED -	STATE OF ILLINOIS DEPARTMENT OF TRANSPORTATION	MCLEAN BLVD ENVIRONMENTAL ADAPTIVE MANAGEMENT PLANS GENERAL DETAILS
		DRAWN - NDP	REVISED -		
	PLOT SCALE =	CHECKED - PDK	REVISED -		
	PLOT DATE = 8/30/2011	DATE - 8/29/11	REVISED -		SCALE: SHEET NO. 22 OF 54 SHEETS STA. TO STA.

F.A.P. RTE.	SECTION	COUNTY	TOTAL SHEETS	SHEET NO.
361	06-00214-11-LS	KANE	54	22
		CONTRACT NO.63638		
FED. ROAD DIST. NO.	ILLINOIS	FED. AID PROJECT		

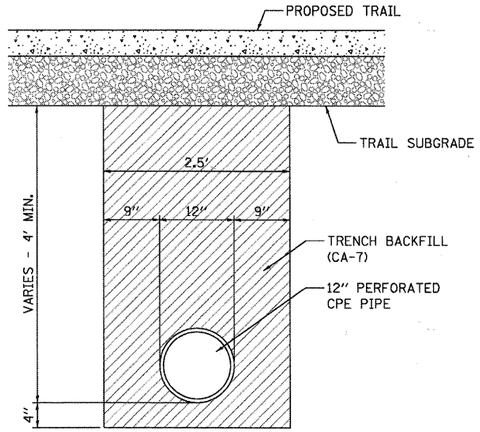

LEVEL SPREADER TRENCH BACKFILL DETAIL

FOR DRAIN UNDER TRAIL

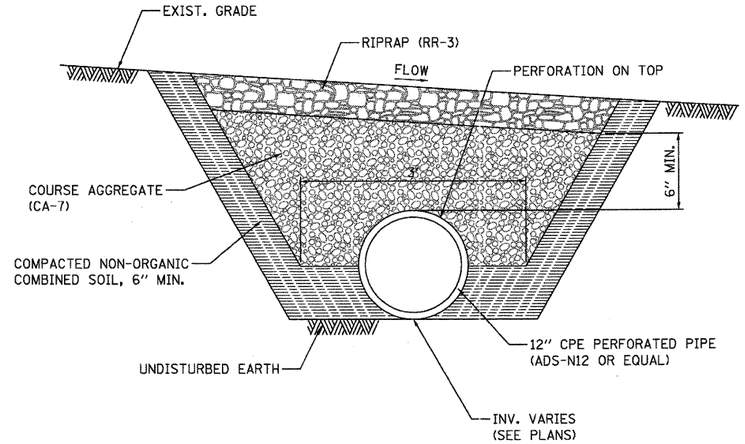

LEVEL SPREADER DETAIL SECTION A–A

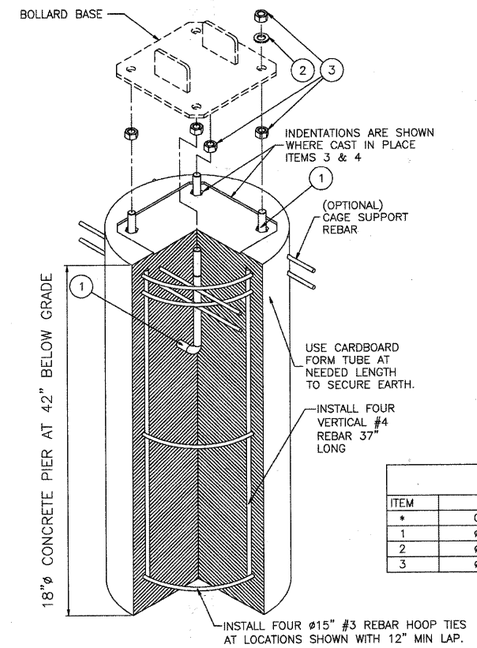

BILL OF MATERIAL		
ITEM	DESCRIPTION	QTY.
*	CPAS KIT – INCLUDES THE FOLLOWING PART NUMBERS	*
1	ø3/4" x 12" TYPE L ANCHOR BOLT–H.D.G.	4
2	ø3/4" TYPE A FLAT NARROW WASHER GALVANIZED STEEL	4
3	ø3/4" HEX NUT GALVANIZED STEEL	8

CONCRETE BASE FOR FOLD DOWN BOLLARD DETAIL

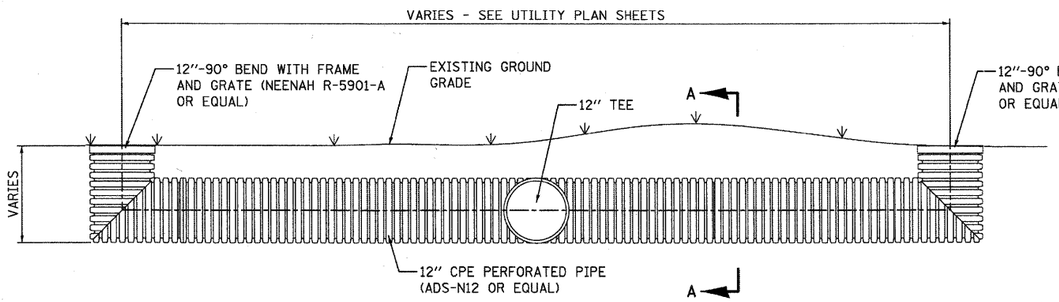

CLEANOUT FOR LEVEL SPREADER DETAIL

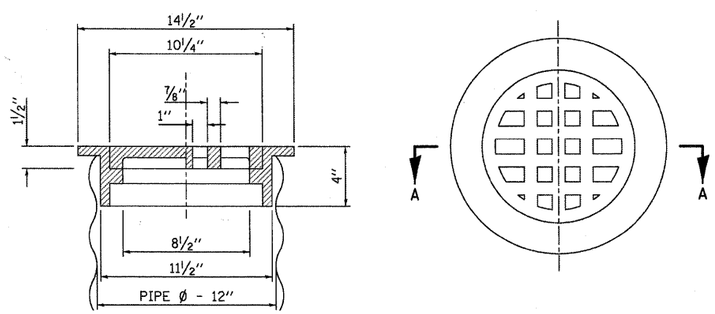

SECTION A-A

CLEANOUT FRAME AND GRATE FOR LEVEL SPREADER

FRAME AND GRATE SHALL BE NEENAH R-5901-A OR APPROVED EQUAL

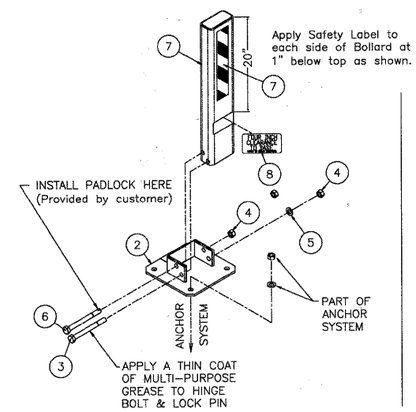

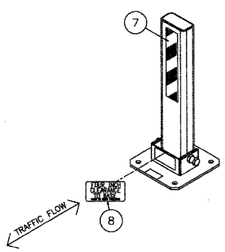

FOUR INCH CLEARANCE TO BASE WHEN IN DOWN POSITION.

No. 8 SAFETY LABEL

BILL OF MATERIAL		
ITEM	DESCRIPTION	QTY.
1	LPHDHB POST	1
2	LPHDHB BASE	1
3	ø3/4" x 8" HEX HEAD HINGE BOLT – 18–8 SS	1
4	ø3/4" HEX NUT – 18–8 SS	2
5	ø3/4" FLAT WASHER – TYPE A NARROW – 18–8 SS	1
6	ø3/4" X 8" HEX HEAD LOCKING PIN – 18–8 SS	1
7	SAFETY LABEL 3" x 12"	2
8	FOUR INCH CLEARANCE LABEL	2

FOLD DOWN BOLLARD DETAIL

FILE NAME = M:\Projects\2011\11813I SteernerRd2A\cadd\Civil\Dgn\Sht\D_GGD_110131_02.dgn

WILLS BURKE KELSEY ASSOCIATES LTD. 116 West Main Street, Suite 201 St. Charles, Illinois 60174	USER NAME = nparris	DESIGNED - PJF	REVISED -
		DRAWN - NDP	REVISED -
	PLOT SCALE =	CHECKED - PDK	REVISED -
	PLOT DATE = 8/30/2011	DATE - 8/29/11	REVISED -

STATE OF ILLINOIS
DEPARTMENT OF TRANSPORTATION

MCLEAN BLVD ENVIRONMENTAL ADAPTIVE MANAGEMENT PLANS
GENERAL DETAILS

SCALE: | SHEET NO. 23 OF 54 SHEETS | STA. TO STA.

F.A.P. RTE.	SECTION	COUNTY	TOTAL SHEETS	SHEET NO.
361	06-00214-11-LS	KANE	54	23
		CONTRACT NO.63638		
FED. ROAD DIST. NO.	ILLINOIS	FED. AID PROJECT		

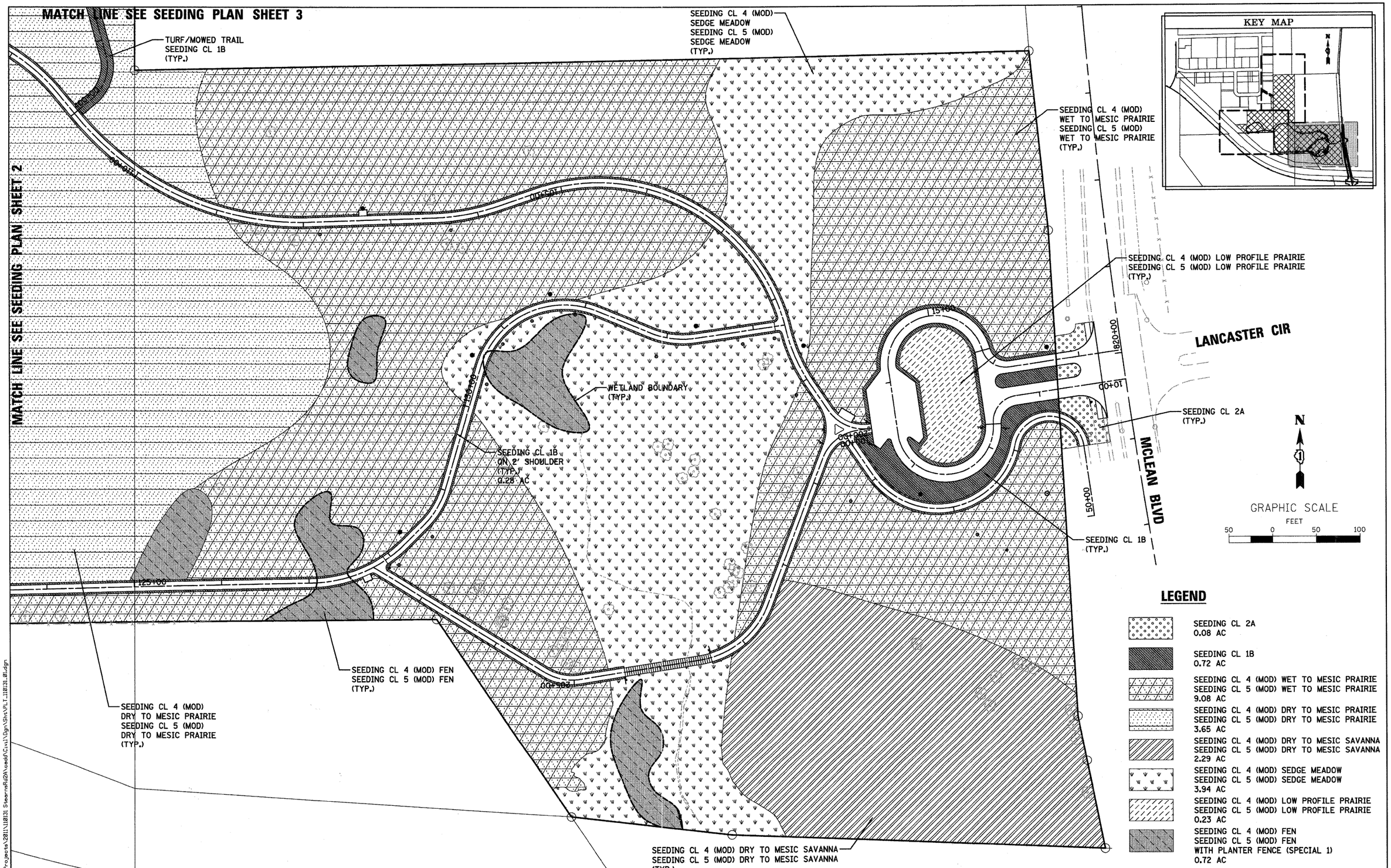

FILE NAME = W:\Projects\2011\110131 StearnsRd2A\cadd\Civil\Dgn\Sht\PLT_110131_01.dgn

WILLS BURKE KELSEY ASSOCIATES LTD. 116 West Main Street, Suite 201 St. Charles, Illinois 60174	USER NAME = nparris	DESIGNED - PJF	REVISED -
		DRAWN - NDP	REVISED -
	PLOT SCALE = 1"=50'	CHECKED - PDK	REVISED -
	PLOT DATE = 8/30/2011	DATE - 8/29/11	REVISED -

STATE OF ILLINOIS
DEPARTMENT OF TRANSPORTATION

MCLEAN BLVD ENVIRONMENTAL ADAPTIVE MANAGEMENT PLANS
SEEDING PLAN

SCALE: 1"=50' | SHEET NO. 1 OF 3 SHEETS | STA. | TO STA.

F.A.P. RTE.	SECTION	COUNTY	TOTAL SHEETS	SHEET NO.
361	06-00214-11-LS	KANE	54	24
		CONTRACT NO.63638		
FED. ROAD DIST. NO.	ILLINOIS	FED. AID PROJECT		

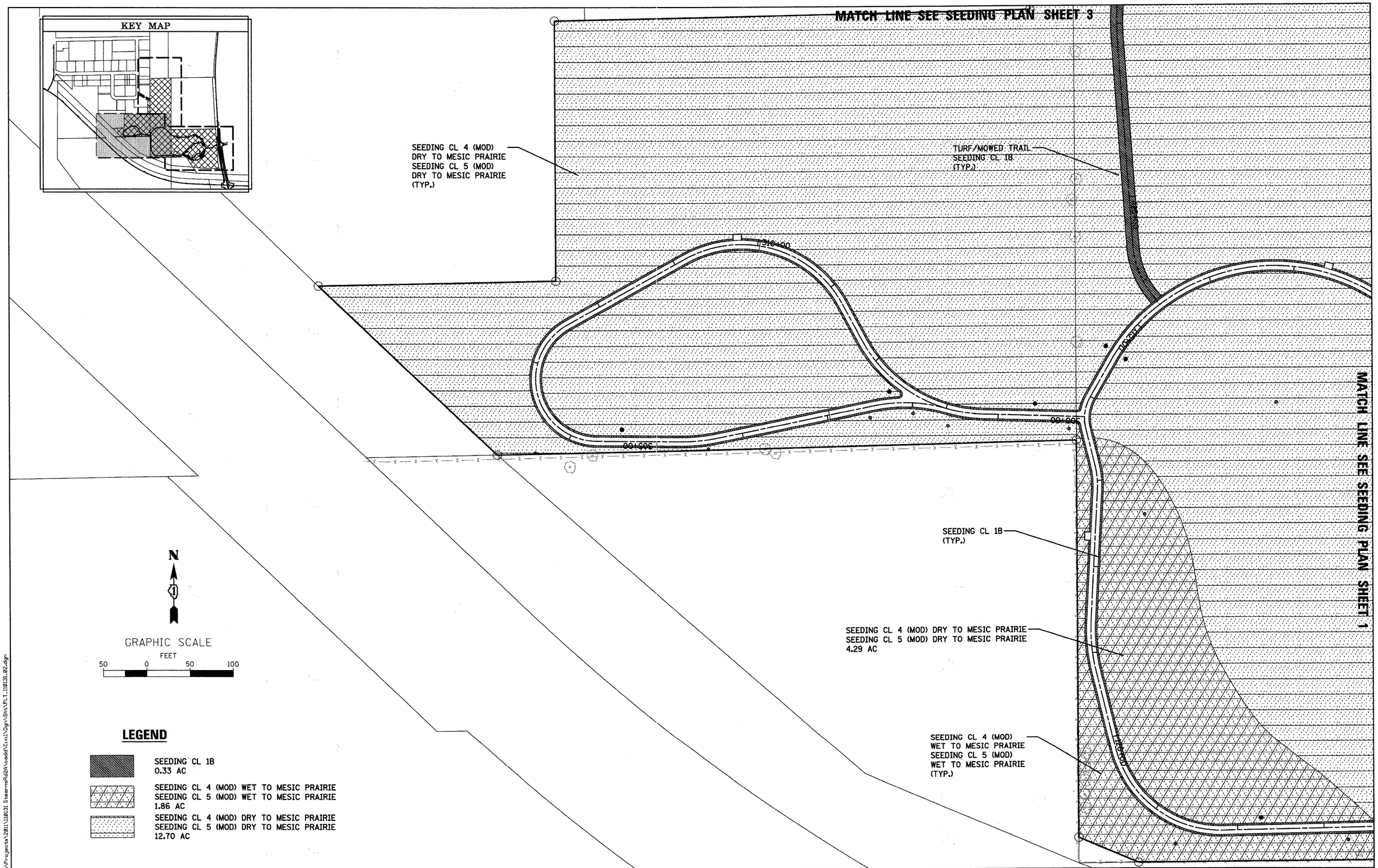

FILE NAME = W:\Projects\2011\110131 SteamsRd26\cadd\Civil\Dgn\Sht\PLT_110131_02.dgn

WILLS BURKE KELSEY ASSOCIATES LTD.
116 West Main Street, Suite 201
St. Charles, Illinois 60174

USER NAME = nparris	DESIGNED - PJF	REVISED -	
	DRAWN - NDP	REVISED -	
PLOT SCALE = 1"=50'	CHECKED - PDK	REVISED -	
PLOT DATE = 8/30/2011	DATE - 8/29/11	REVISED -	

STATE OF ILLINOIS
DEPARTMENT OF TRANSPORTATION

MCLEAN BLVD ENVIRONMENTAL ADAPTIVE MANAGEMENT PLANS
SEEDING PLAN

SCALE: 1"=50' | SHEET NO. 2 OF 3 SHEETS | STA. TO STA.

F.A.P. RTE.	SECTION	COUNTY	TOTAL SHEETS	SHEET NO.
361	08-00214-11-LS	KANE	54	25
		CONTRACT NO.63638		
FED. ROAD DIST. NO.	ILLINOIS	FED. AID PROJECT		

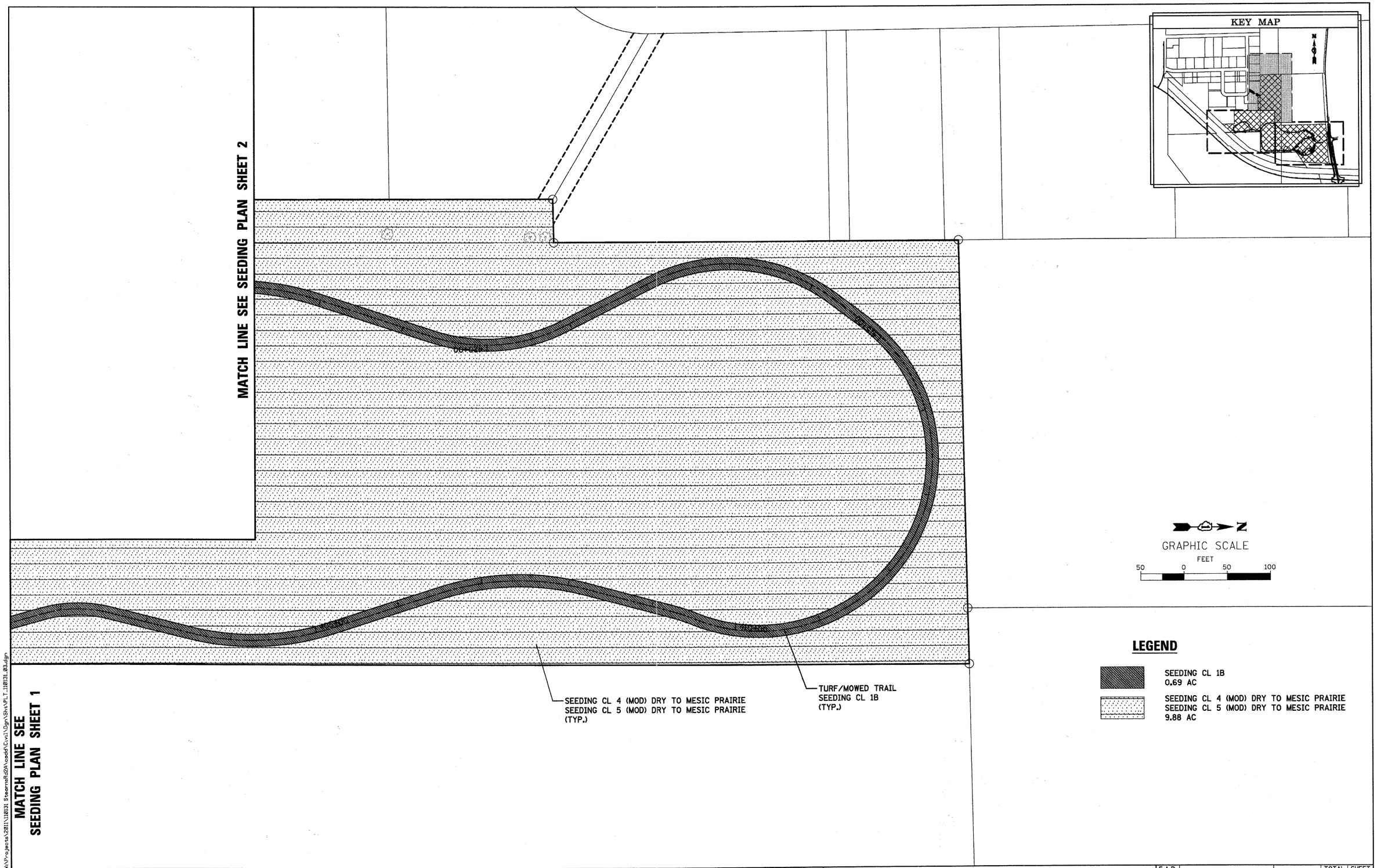

FILE NAME = W:\Projects\2011\110131 SteernRd2A\cadd\Civil\Dgn\Sht\PLT_110131_03.dgn

WILLS BURKE KELSEY ASSOCIATES LTD.
116 West Main Street, Suite 201
St. Charles, Illinois 60174

USER NAME = nparris	DESIGNED - PJF	REVISED -
	DRAWN - NDP	REVISED -
PLOT SCALE = 1"=50'	CHECKED - PDK	REVISED -
PLOT DATE = 8/30/2011	DATE - 8/29/11	REVISED -

STATE OF ILLINOIS
DEPARTMENT OF TRANSPORTATION

MCLEAN BLVD ENVIRONMENTAL ADAPTIVE MANAGEMENT PLANS
SEEDING PLAN

SCALE: 1"=50' | SHEET NO. 3 OF 3 SHEETS | STA. TO STA.

F.A.P. RTE.	SECTION	COUNTY	TOTAL SHEETS	SHEET NO.
361	08-00214-11-LS	KANE	54	26
		CONTRACT NO.63638		
FED. ROAD DIST. NO.	ILLINOIS	FED. AID PROJECT		

MATCH LINE SEE PLANTING PLAN SHEET 3

MATCH LINE SEE PLANTING PLAN SHEET 2

KEY MAP

N

PROPOSED TREE (TYP.)

PERENNIAL PLANTS, PRAIRE TYPE 2" DIA. BY 4" DEEP PLUG & PLANTER FENCE 9 UNITS, 86.5 SQ YD

WETLAND BOUNDARY (TYP.)

PERENNIAL PLANTS, PRAIRE TYPE 2" DIA. BY 4" DEEP PLUG & PLANTER FENCE 15 UNITS, 145.1 SQ YD

PROJECT BOUNDARY

EXISTING TREE (TYP.)

PERENNIAL PLANTS, SEDGE MEADOW TYPE, 2" DIA. BY 4" DEEP PLUG & PLANTER FENCE 37 UNITS, 886.0 SQ YD

PERENNIAL PLANTS, SEDGE MEADOW TYPE, 2" DIA. BY 4" DEEP PLUG & PLANTER FENCE 234 UNITS, 5667.7 SQ YD

100+00 105+00 110+00 115+00 120+00 125+00 130+00 135+00 140+00 145+00 150+00 155+00 160+00 165+00 170+00 175+00 180+00 185+00 190+00 195+00 200+00 205+00 210+00 215+00 220+00 225+00 230+00 235+00 240+00 245+00 250+00 255+00 260+00 265+00 270+00 275+00 280+00 285+00 290+00 295+00 300+00 305+00 310+00 315+00 320+00 325+00 330+00 335+00 340+00 345+00 350+00 355+00 360+00 365+00 370+00 375+00 380+00 385+00 390+00 395+00 400+00 405+00 410+00 415+00 420+00 425+00 430+00 435+00 440+00 445+00 450+00 455+00 460+00 465+00 470+00 475+00 480+00 485+00 490+00 495+00 500+00 505+00 510+00 515+00 520+00 525+00 530+00 535+00 540+00 545+00 550+00 555+00 560+00 565+00 570+00 575+00 580+00 585+00 590+00 595+00 600+00 605+00 610+00 615+00 620+00 625+00 630+00 635+00 640+00 645+00 650+00 655+00 660+00 665+00 670+00 675+00 680+00 685+00 690+00 695+00 700+00 705+00 710+00 715+00 720+00 725+00 730+00 735+00 740+00 745+00 750+00 755+00 760+00 765+00 770+00 775+00 780+00 785+00 790+00 795+00 800+00 805+00 810+00 815+00 820+00 825+00 830+00 835+00 840+00 845+00 850+00 855+00 860+00 865+00 870+00 875+00 880+00 885+00 890+00 895+00 900+00 905+00 910+00 915+00 920+00 925+00 930+00 935+00 940+00 945+00 950+00 955+00 960+00 965+00 970+00 975+00 980+00 985+00 990+00 995+00 1000+00 1005+00 1010+00 1015+00 1020+00 1025+00 1030+00 1035+00 1040+00 1045+00 1050+00 1055+00 1060+00 1065+00 1070+00 1075+00 1080+00 1085+00 1090+00 1095+00 1100+00 1105+00 1110+00 1115+00 1120+00 1125+00 1130+00 1135+00 1140+00 1145+00 1150+00 1155+00 1160+00 1165+00 1170+00 1175+00 1180+00 1185+00 1190+00 1195+00 1200+00 1205+00 1210+00 1215+00 1220+00 1225+00 1230+00 1235+00 1240+00 1245+00 1250+00 1255+00 1260+00 1265+00 1270+00 1275+00 1280+00 1285+00 1290+00 1295+00 1300+00 1305+00 1310+00 1315+00 1320+00 1325+00 1330+00 1335+00 1340+00 1345+00 1350+00 1355+00 1360+00 1365+00 1370+00 1375+00 1380+00 1385+00 1390+00 1395+00 1400+00 1405+00 1410+00 1415+00 1420+00 1425+00 1430+00 1435+00 1440+00 1445+00 1450+00 1455+00 1460+00 1465+00 1470+00 1475+00 1480+00 1485+00 1490+00 1495+00 1500+00 1505+00 1510+00 1515+00 1520+00 1525+00 1530+00 1535+00 1540+00 1545+00 1550+00 1555+00 1560+00 1565+00 1570+00 1575+00 1580+00 1585+00 1590+00 1595+00 1600+00 1605+00 1610+00 1615+00 1620+00 1625+00 1630+00 1635+00 1640+00 1645+00 1650+00 1655+00 1660+00 1665+00 1670+00 1675+00 1680+00 1685+00 1690+00 1695+00 1700+00 1705+00 1710+00 1715+00 1720+00 1725+00 1730+00 1735+00 1740+00 1745+00 1750+00 1755+00 1760+00 1765+00 1770+00 1775+00 1780+00 1785+00 1790+00 1795+00 1800+00 1805+00 1810+00 1815+00 1820+00 1825+00 1830+00 1835+00 1840+00 1845+00 1850+00 1855+00 1860+00 1865+00 1870+00 1875+00 1880+00 1885+00 1890+00 1895+00 1900+00 1905+00 1910+00 1915+00 1920+00 1925+00 1930+00 1935+00 1940+00 1945+00 1950+00 1955+00 1960+00 1965+00 1970+00 1975+00 1980+00 1985+00 1990+00 1995+00 2000+00 2005+00 2010+00 2015+00 2020+00 2025+00 2030+00 2035+00 2040+00 2045+00 2050+00 2055+00 2060+00 2065+00 2070+00 2075+00 2080+00 2085+00 2090+00 2095+00 2100+00 2105+00 2110+00 2115+00 2120+00 2125+00 2130+00 2135+00 2140+00 2145+00 2150+00 2155+00 2160+00 2165+00 2170+00 2175+00 2180+00 2185+00 2190+00 2195+00 2200+00 2205+00 2210+00 2215+00 2220+00 2225+00 2230+00 2235+00 2240+00 2245+00 2250+00 2255+00 2260+00 2265+00 2270+00 2275+00 2280+00 2285+00 2290+00 2295+00 2300+00 2305+00 2310+00 2315+00 2320+00 2325+00 2330+00 2335+00 2340+00 2345+00 2350+00 2355+00 2360+00 2365+00 2370+00 2375+00 2380+00 2385+00 2390+00 2395+00 2400+00 2405+00 2410+00 2415+00 2420+00 2425+00 2430+00 2435+00 2440+00 2445+00 2450+00 2455+00 2460+00 2465+00 2470+00 2475+00 2480+00 2485+00 2490+00 2495+00 2500+00 2505+00 2510+00 2515+00 2520+00 2525+00 2530+00 2535+00 2540+00 2545+00 2550+00 2555+00 2560+00 2565+00 2570+00 2575+00 2580+00 2585+00 2590+00 2595+00 2600+00 2605+00 2610+00 2615+00 2620+00 2625+00 2630+00 2635+00 2640+00 2645+00 2650+00 2655+00 2660+00 2665+00 2670+00 2675+00 2680+00 2685+00 2690+00 2695+00 2700+00 2705+00 2710+00 2715+00 2720+00 2725+00 2730+00 2735+00 2740+00 2745+00 2750+00 2755+00 2760+00 2765+00 2770+00 2775+00 2780+00 2785+00 2790+00 2795+00 2800+00 2805+00 2810+00 2815+00 2820+00 2825+00 2830+00 2835+00 2840+00 2845+00 2850+00 2855+00 2860+00 2865+00 2870+00 2875+00 2880+00 2885+00 2890+00 2895+00 2900+00 2905+00 2910+00 2915+00 2920+00 2925+00 2930+00 2935+00 2940+00 2945+00 2950+00 2955+00 2960+00 2965+00 2970+00 2975+00 2980+00 2985+00 2990+00 2995+00 3000+00 3005+00 3010+00 3015+00 3020+00 3025+00 3030+00 3035+00 3040+00 3045+00 3050+00 3055+00 3060+00 3065+00 3070+00 3075+00 3080+00 3085+00 3090+00 3095+00 3100+00 3105+00 3110+00 3115+00 3120+00 3125+00 3130+00 3135+00 3140+00 3145+00 3150+00 3155+00 3160+00 3165+00 3170+00 3175+00 3180+00 3185+00 3190+00 3195+00 3200+00 3205+00 3210+00 3215+00 3220+00 3225+00 3230+00 3235+00 3240+00 3245+00 3250+00 3255+00 3260+00 3265+00 3270+00 3275+00 3280+00 3285+00 3290+00 3295+00 3300+00 3305+00 3310+00 3315+00 3320+00 3325+00 3330+00 3335+00 3340+00 3345+00 3350+00 3355+00 3360+00 3365+00 3370+00 3375+00 3380+00 3385+00 3390+00 3395+00 3400+00 3405+00 3410+00 3415+00 3420+00 3425+00 3430+00 3435+00 3440+00 3445+00 3450+00 3455+00 3460+00 3465+00 3470+00 3475+00 3480+00 3485+00 3490+00 3495+00 3500+00 3505+00 3510+00 3515+00 3520+00 3525+00 3530+00 3535+00 3540+00 3545+00 3550+00 3555+00 3560+00 3565+00 3570+00 3575+00 3580+00 3585+00 3590+00 3595+00 3600+00 3605+00 3610+00 3615+00 3620+00 3625+00 3630+00 3635+00 3640+00 3645+00 3650+00 3655+00 3660+00 3665+00 3670+00 3675+00 3680+00 3685+00 3690+00 3695+00 3700+00 3705+00 3710+00 3715+00 3720+00 3725+00 3730+00 3735+00 3740+00 3745+00 3750+00 3755+00 3760+00 3765+00 3770+00 3775+00 3780+00 3785+00 3790+00 3795+00 3800+00 3805+00 3810+00 3815+00 3820+00 3825+00 3830+00 3835+00 3840+00 3845+00 3850+00 3855+00 3860+00 3865+00 3870+00 3875+00 3880+00 3885+00 3890+00 3895+00 3900+00 3905+00 3910+00 3915+00 3920+00 3925+00 3930+00 3935+00 3940+00 3945+00 3950+00 3955+00 3960+00 3965+00 3970+00 3975+00 3980+00 3985+00 3990+00 3995+00 4000+00 4005+00 4010+00 4015+00 4020+00 4025+00 4030+00 4035+00 4040+00 4045+00 4050+00 4055+00 4060+00 4065+00 4070+00 4075+00 4080+00 4085+00 4090+00 4095+00 4100+00 4105+00 4110+00 4115+00 4120+00 4125+00 4130+00 4135+00 4140+00 4145+00 4150+00 4155+00 4160+00 4165+00 4170+00 4175+00 4180+00 4185+00 4190+00 4195+00 4200+00 4205+00 4210+00 4215+00 4220+00 4225+00 4230+00 4235+00 4240+00 4245+00 4250+00 4255+00 4260+00 4265+00 4270+00 4275+00 4280+00 4285+00 4290+00 4295+00 4300+00 4305+00 4310+00 4315+00 4320+00 4325+00 4330+00 4335+00 4340+00 4345+00 4350+00 4355+00 4360+00 4365+00 4370+00 4375+00 4380+00 4385+00 4390+00 4395+00 4400+00 4405+00 4410+00 4415+00 4420+00 4425+00 4430+00 4435+00 4440+00 4445+00 4450+00 4455+00 4460+00 4465+00 4470+00 4475+00 4480+00 4485+00 4490+00 4495+00 4500+00 4505+00 4510+00 4515+00 4520+00 4525+00 4530+00 4535+00 4540+00 4545+00 4550+00 4555+00 4560+00 4565+00 4570+00 4575+00 4580+00 4585+00 4590+00 4595+00 4600+00 4605+00 4610+00 4615+00 4620+00 4625+00 4630+00 4635+00 4640+00 4645+00 4650+00 4655+00 4660+00 4665+00 4670+00 4675+00 4680+00 4685+00 4690+00 4695+00 4700+00 4705+00 4710+00 4715+00 4720+00 4725+00 4730+00 4735+00 4740+00 4745+00 4750+00 4755+00 4760+00 4765+00 4770+00 4775+00 4780+00 4785+00 4790+00 4795+00 4800+00 4805+00 4810+00 4815+00 4820+00 4825+00 4830+00 4835+00 4840+00 4845+00 4850+00 4855+00 4860+00 4865+00 4870+00 4875+00 4880+00 4885+00 4890+00 4895+00 4900+00 4905+00 4910+00 4915+00 4920+00 4925+00 4930+00 4935+00 4940+00 4945+00 4950+00 4955+00 4960+00 4965+00 4970+00 4975+00 4980+00 4985+00 4990+00 4995+00 5000+00 5005+00 5010+00 5015+00 5020+00 5025+00 5030+00 5035+00 5040+00 5045+00 5050+00 5055+00 5060+00 5065+00 5070+00 5075+00 5080+00 5085+00 5090+00 5095+00 5100+00 5105+00 5110+00 5115+00 5120+00 5125+00 5130+00 5135+00 5140+00 5145+00 5150+00 5155+00 5160+00 5165+00 5170+00 5175+00 5180+00 5185+00 5190+00 5195+00 5200+00 5205+00 5210+00 5215+00 5220+00 5225+00 5230+00 5235+00 5240+00 5245+00 5250+00 5255+00 5260+00 5265+00 5270+00 5275+00 5280+00 5285+00 5290+00 5295+00 5300+00 5305+00 5310+00 5315+00 5320+00 5325+00 5330+00 5335+00 5340+00 5345+00 5350+00 5355+00 5360+00 5365+00 5370+00 5375+00 5380+00 5385+00 5390+00 5395+00 5400+00 5405+00 5410+00 5415+00 5420+00 5425+00 5430+00 5435+00 5440+00 5445+00 5450+00 5455+00 5460+00 5465+00 5470+00 5475+00 5480+00 5485+00 5490+00 5495+00 5500+00 5505+00 5510+00 5515+00 5520+00 5525+00 5530+00 5535+00 5540+00 5545+00 5550+00 5555+00 5560+00 5565+00 5570+00 5575+00 5580+00 5585+00 5590+00 5595+00 5600+00 5605+00 5610+00 5615+00 5620+00 5625+00 5630+00 5635+00 5640+00 5645+00 5650+00 5655+00 5660+00 5665+00 5670+00 5675+00 5680+00 5685+00 5690+00 5695+00 5700+00 5705+00 5710+00 5715+00 5720+00 5725+00 5730+00 5735+00 5740+00 5745+00 5750+00 5755+00 5760+00 5765+00 5770+00 5775+00 5780+00 5785+00 5790+00 5795+00 5800+00 5805+00 5810+00 5815+00 5820+00 5825+00 5830+00 5835+00 5840+00 5845+00 5850+00 5855+00 5860+00 5865+00 5870+00 5875+00 5880+00 5885+00 5890+00 5895+00 5900+00 5905+00 5910+00 5915+00 5920+00 5925+00 5930+00 5935+00 5940+00 5945+00 5950+00 5955+00 5960+00 5965+00 5970+00 5975+00 5980+00 5985+00 5990+00 5995+00 6000+00 6005+00 6010+00 6015+00 6020+00 6025+00 6030+00 6035+00 6040+00 6045+00 6050+00 6055+00 6060+00 6065+00 6070+00 6075+00 6080+00 6085+00 6090+00 6095+00 6100+00 6105+00 6110+00 6115+00 6120+00 6125+00 6130+00 6135+00 6140+00 6145+00 6150+00 6155+00 6160+00 6165+00 6170+00 6175+00 6180+00 6185+00 6190+00 6195+00 6200+00 6205+00 6210+00 6215+00 6220+00 6225+00 6230+00 6235+00 6240+00 6245+00 6250+00 6255+00 6260+00 6265+00 6270+00 6275+00 6280+00 6285+00 6290+00 6295+00 6300+00 6305+00 6310+00 6315+00 6320+00 6325+00 6330+00 6335+00 6340+00 6345+00 6350+00 6355+00 6360+00 6365+00 6370+00 6375+00 6380+00 6385+00 6390+00 6395+00 6400+00 6405+00 6410+00 6415+00 6420+00 6425+00 6430+00 6435+00 6440+00 6445+00 6450+00 6455+00 6460+00 6465+00 6470+00 6475+00 6480+00 6485+00 6490+00 6495+00 6500+00 6505+00 6510+00 6515+00 6520+00 6525+00 6530+00 6535+00 6540+00 6545+00 6550+00 6555+00 6560+00 6565+00 6570+00 6575+00 6580+00 6585+00 6590+00 6595+00 6600+00 6605+00 6610+00 6615+00 6620+00 6625+00 6630+00 6635+00 6640+00 6645+00 6650+00 6655+00 6660+00 6665+00 6670+00 6675+00 6680+00 6685+00 6690+00 6695+00 6700+00 6705+00 6710+00 6715+00 6720+00 6725+00 6730+00 6735+00 6740+00 6745+00 6750+00 6755+00 6760+00 6765+00 6770+00 6775+00 6780+00 6785+00 6790+00 6795+00 6800+00 6805+00 6810+00 6815+00 6820+00 6825+00 6830+00 6835+00 6840+00 6845+00 6850+00 6855+00 6860+00 6865+00 6870+00 6875+00 6880+00 6885+00 6890+00 6895+00 6900+00 6905+00 6910+00 6915+00 6920+00 6925+00 6930+00 6935+00 6940+00 6945+00 6950+00 6955+00 6960+00 6965+00 6970+00 6975+00 6980+00 6985+00 6990+00 6995+00 7000+00 7005+00 7010+00 7015+00 7020+00 7025+00 7030+00 7035+00 7040+00 7045+00 7050+00 7055+00 7060+00 7065+00 7070+00 7075+00 7080+00 7085+00 7090+00 7095+00 7100+00 7105+00 7110+00 7115+00 7120+00 7125+00 7130+00 7135+00 7140+00 7145+00 7150+00 7155+00 7160+00 7165+00 7170+00 7175+00 7180+00 7185+00 7190+00 7195+00 7200+00 7205+00 7210+00 7215+00 7220+00 7225+00 7230+00 7235+00 7240+00 7245+00 7250+00 7255+00 7260+00 7265+00 7270+00 7275+00 7280+00 7285+00 7290+00 7295+00 7300+00 7305+00 7310+00 7315+00 7320+00 7325+00 7330+00 7335+00 7340+00 7345+00 7350+00 7355+00 7360+00 7365+00 7370+00 7375+00 7380+00 7385+00 7390+00 7395+00 7400+00 7405+00 7410+00 7415+00 7420+00 7425+00 7430+00 7435+00 7440+00 7445+00 7450+00 7455+00 7460+00 7465+00 7470+00 7475+00 7480+00 7485+00 7490+00 7495+00 7500+00 7505+00 7510+00 7515+00 7520+00 7525+00 7530+00 7535+00 7540+00 7545+00 7550+00 7555+00 7560+00 7565+00 7570+00 7575+00 7580+00 7585+00 7590+00 7595+00 7600+00 7605+00 7610+00 7615+00 7620+00 7625+00 7630+00 7635+00 7640+00 7645+00 7650+00 7655+00 7660+00 7665+00 7670+00 7675+00 7680+00 7685+00 7690+00 7695+00 7700+00 7705+00 7710+00 7715+00 7720+00 7725+00 7730+00 7735+00 7740+00 7745+00 7750+00 7755+00 7760+00 7765+00 7770+00 7775+00 7780+00 7785+00 7790+00 7795+00 7800+00 7805+00 7810+00 7815+00 7820+00 7825+00 7830+00 7835+00 7840+00 7845+00 7850+00 7855+00 7860+00 7865+00 7870+00 7875+00 7880+00 7885+00 7890+00 7895+00 7900+00 7905+00 7910+00 7915+00 7920+00 7925+00 7930+00 7935+00 7940+00 7945+00 7950+00 7955+00 7960+00 7965+00 7970+00 7975+00 7980+00 7985+00 7990+00 7995+00 8000+00 8005+00 8010+00 8015+00 8020+00 8025+00 8030+00 8035+00 8040+00 8045+00 8050+00 8055+00 8060+00 8065+00 8070+00 8075+00 8080+00 8085+00 8090+00 8095+00 8100+00 8105+00 8110+00 8115+00 8120+00 8125+00 8130+00 8135+00 8140+00 8145+00 8150+00 8155+00 8160+00 8165+00 8170+00 8175+00 8180+00 8185+00 8190+00 8195+00 8200+00 8205+00 8210+00 8215+00 8220+00 8225+00 8230+00 8235+00 8240+00 8245+00 8250+00 8255+00 8260+00 8265+00 8270+00 8275+00 8280+00 8285+00 8290+00 8295+00 8300+00 8305+00 8310+00 8315+00 8320+00 8325+00 8330+00 8335+00 8340+00 8345+00 8350+00 8355+00 8360+00 8365+00 8370+00 8375+00 8380+00 8385+00 8390+00 8395+00 8400+00 8405+00 8410+00 8415+00 8420+00 8425+00 8430+00 8435+00 8440+00 8445+00 8450+00 8455+00 8460+00 8465+00 8470+00 8475+00 8480+00 8485+00 8490+00 8495+00 8500+00 8505+00 8510+00 8515+00 8520+00 8525+00 8530+00 8535+00 8540+00 8545+00 8550+00 8555+00 8560+00 8565+00 8570+00 8575+00 8580+00 8585+00 8590+00 8595+00 8600+00 8605+00 8610+00 8615+00 8620+00 8625+00 8630+00 8635+00 8640+00 8645+00 8650+00 8655+00 8660+00 8665+00 8670+00 8675+00 8680+00 8685+00 8690+00 8695+00 8700+00 8705+00 8710+00 8715+00 8720+00 8725+00 8730+00 8735+00 8740+00 8745+00 8750+00 8755+00 8760+00 8765+00 8770+00 8775+00 8780+00 8785+00 8790+00 8795+00 8800+00 8805+00 8810+00 8815+00 8820+00 8825+00 8830+00 8835+00 8840+00 8845+00 8850+00 8855+00 8860+00 8865+00 8870+00 8875+00 8880+00 8885+00 8890+00 8895+00 8900+00 8905+00 8910+00 8915+00 8920+00 8925+00 8930+00 8935+00 8940+00 8945+00 8950+00 8955+00 8960+00 8965+00 8970+00 8975+00 8980+00 8985+00 8990+00 8995+00 9000+00 9005+00 9010+00 9015+00 9020+00 9025+00 9030+00 9035+00 9040+00 9045+00 9050+00 9055+00 9060+00 9065+00 9070+00 9075+00 9080+00 9085+00 9090+00 9095+00 9100+00 9105+00 9110+00 9115+00 9120+00 9125+00 9130+00 9135+00 9140+00 9145+00 9150+00 9155+00 9160+00 9165+00 9170+00 9175+00 9180+00 9185+00 9190+00 9195+00 9200+00 9205+00 9210+00 9215+00 9220+00 9225+00 9230+00 9235+00 9240+00 9245+00 9250+00 9255+00 9260+00 9265+00 9270+00 9275+00 9280+00 9285+00 9290+00 9295+00 9300+00 9305+00 9310+00 9315+00 9320+00 9325+00 9330+00 9335+00 9340+00 9345+00 9350+00 9355+00 9360+00 9365+00 9370+00 9375+00 9380+00 9385+00 9390+00 9395+00 9400+00 9405+00 9410+00 9415+00 9420+00 9425+00 9430+00 9435+00 9440+00 9445+00 9450+00 9455+00 9460+00 9465+00 9470+00 9475+00 9480+00 9485+00 9490+00 9495+00 9500+00 9505+00 9510+00 9515+00 9520+00 9525+00 9530+00 9535+00 9540+00 9545+00 9550+00 9555+00 9560+00 9565+00 9570+00 9575+00 9580+00 9585+00 9590+00 9595+00 9600+00 9605+00 9610+00 9615+00 9620+00 9625+00 9630+00 9635+00 9640+00 9645+00 9650+00 9655+00 9660+00 9665+00 9670+00 9675+00 9680+00 9685+00 9690+00 9695+00 9700+00 9705+00 9710+00 9715+00 9720+00 9725+00 9730+00 9735+00 9740+00 9745+00 9750+00 9755+00 9760+00 9765+00 9770+00 9775+00 9780+00 9785+00 9790+00 9795+00 9800+00 9805+00 9810+00 9815+00 9820+00 9825+00 9830+00 9835+00 9840+00 9845+00 9850+00 9855+00 9860+00 9865+00 9870+00 9875+00 9880+00 9885+00 9890+00 9895+00 9900+00 9905+00 9910+00 9915+00 9920+00 9925+00 9930+00 9935+00 9940+00 9945+00 9950+00 9955+00 9960+00 9965+00 9970+00 9975+00 9980+00 9985+00 9990+00 9995+00 10000+00

N

GRAPHIC SCALE
FEET
50 0 50 100

LEGEND

- PROPOSED TREE
- PROPOSED SHRUB
- TREE OR SHURB LABEL (SEE SHEET 31 FOR TREE SCHEDULE AND LEGEND)
- PERENNIAL PLANTS, SEDGE MEADOW TYPE, 2" DIA. BY 4" DEEP PLUG & PLANTER FENCE
- PERENNIAL PLANTS, PRAIRE TYPE, 2" DIA. BY 4" DEEP PLUG & PLANTER FENCE

FILE NAME = W:\Projects\2011\110131 SteerneRd2A\cadd\Civil\Dgn\Sht\TREE_110131_01.dgn

WILLS BURKE KELSEY ASSOCIATES LTD.
118 West Main Street, Suite 201
St. Charles, Illinois 60174

USER NAME = nparris	DESIGNED - PJF	REVISED -	
	DRAWN - NDP	REVISED -	
PLOT SCALE = 1"=50'	CHECKED - PDK	REVISED -	
PLOT DATE = 8/30/2011	DATE - 8/29/11	REVISED -	

STATE OF ILLINOIS
DEPARTMENT OF TRANSPORTATION

MCLEAN BLVD ENVIRONMENTAL ADAPTIVE MANAGEMENT PLANS
PLANTING PLAN

SCALE: 1"=50' | SHEET NO. 1 OF 3 SHEETS | STA. TO STA.

F.A.P. RTE.	SECTION	COUNTY	TOTAL SHEETS	SHEET NO.
361	06-00214-11-LS	KANE	54	27
		CONTRACT NO.63638		
FED. ROAD DIST. NO.	ILLINOIS	FED. AID PROJECT		

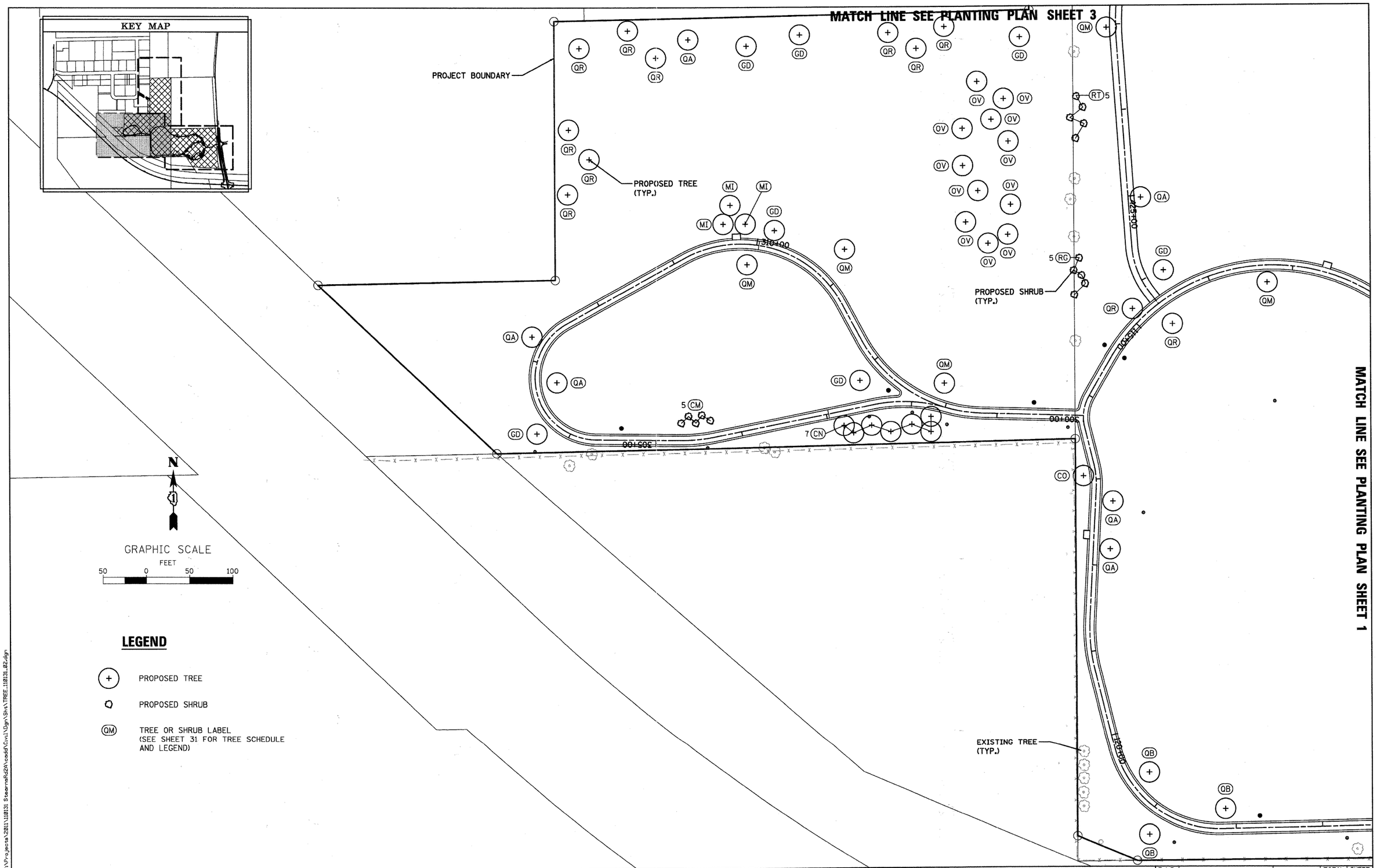

FILE NAME = W:\Projects\2011\110131 Stearns Rd24\cadd\Civil\Dgn\Sht\TREE_110131_02.dgn

WILLS BURKE KELSEY ASSOCIATES LTD.
116 West Main Street, Suite 201
St. Charles, Illinois 60174

USER NAME = nparris	DESIGNED - PJF	REVISED -	
	DRAWN - NDP	REVISED -	
PLOT SCALE = 1'=50'	CHECKED - PDK	REVISED -	
PLOT DATE = 8/30/2011	DATE - 8/29/11	REVISED -	

STATE OF ILLINOIS
DEPARTMENT OF TRANSPORTATION

MCLEAN BLVD ENVIRONMENTAL ADAPTIVE MANAGEMENT PLANS
PLANTING PLAN

SCALE: 1"=50' | SHEET NO. 2 OF 3 SHEETS | STA. | TO STA.

F.A.P. RTE.	SECTION	COUNTY	TOTAL SHEETS	SHEET NO.
361	06-00214-11-LS	KANE	54	28
		CONTRACT NO.63638		
FED. ROAD DIST. NO.	ILLINOIS	FED. AID PROJECT		

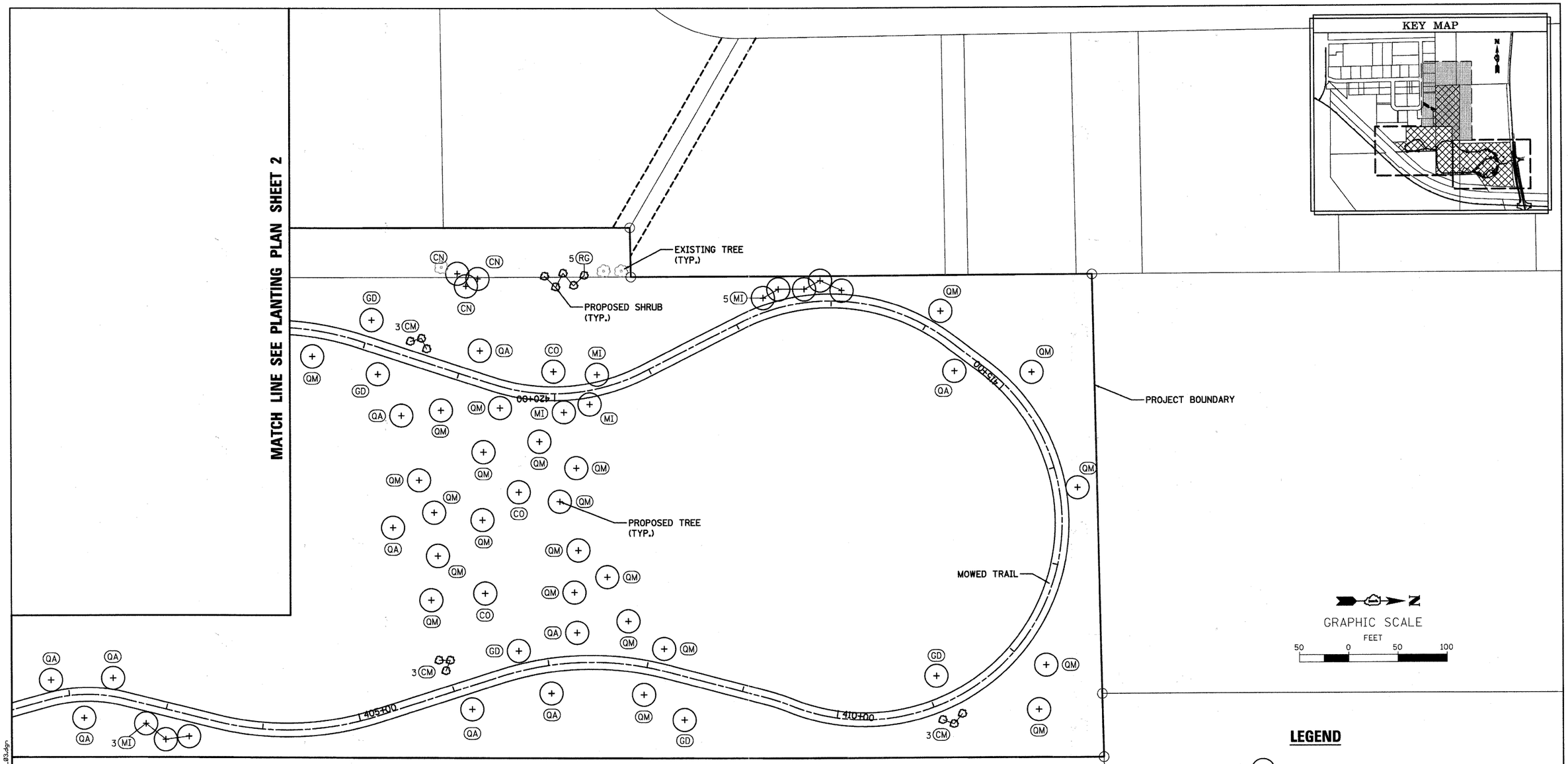

GRAPHIC SCALE
FEET
50 0 50 100

LEGEND

- (+) PROPOSED TREE
- PROPOSED SHRUB
- (QM) TREE OR SHRUB LABEL (SEE SHEET 31 FOR TREE SCHEDULE AND LEGEND)

MATCH LINE SEE PLANTING PLAN SHEET 1

FILE NAME = N:\Projects\2011\110131 Steerns\R2A\cadd\Civil\Dgn\Sht\TREE_110131_03.dgn

WILLS BURKE KELSEY ASSOCIATES LTD.
116 West Main Street, Suite 201
St. Charles, Illinois 60174

USER NAME = nparris	DESIGNED - PJF	REVISED -	
	DRAWN - NDP	REVISED -	
PLOT SCALE = 1"=50'	CHECKED - PDK	REVISED -	
PLOT DATE = 8/30/2011	DATE - 8/29/11	REVISED -	

STATE OF ILLINOIS
DEPARTMENT OF TRANSPORTATION

MCLEAN BLVD ENVIRONMENTAL ADAPTIVE MANAGEMENT PLANS
PLANTING PLAN

SCALE: 1"=50' | SHEET NO. 3 OF 3 SHEETS | STA. | TO STA.

F.A.P. RTE.	SECTION	COUNTY	TOTAL SHEETS	SHEET NO.
361	06-00214-11-LS	KANE	54	29
		CONTRACT NO.63638		
FED. ROAD DIST. NO.	ILLINOIS	FED. AID PROJECT		

SEEDING SCHEUDLE

SEEDING, CLASS 4 (MODIFIED) - FEN

LBS. / ACRE	SCIENTIFIC NAME	COMMON NAME
1.000	ANDROPOGON GERARDII	BIG BLUESTEM
0.250	BROMUS CILIATUS	FRINGED BROME
0.250	BROMUS KALMII	PRAIRIE BROME
0.200	CALAMAGROSTIS CANADENSIS	BLUE JOINT GRASS
0.200	CALAMAGROSTIS INEXPANSA	BOD REED
0.150	CAREX BEBBII	BEBB'S SEDGE
0.075	CAREX BUXBAUMII	ANDES MINT SEDGE
0.075	CAREX COMOSA	BRISTLY SEDGE
0.075	CAREX GRANULARIS	PALE SEDGE
0.250	CAREX HYSTERICINA	PORCUPINE SEDGE
0.250	CAREX SCOPARIA	LANCE-FRUITED OVAL SEDGE
0.075	CAREX STIPATA	FOX SEDGE
0.125	MUHLENBERGIA GLOMERATA	MARSH WILD TIMOTHY
0.075	MUHLENBERGIA MEXICANA	LEAFY SATIN GRASS
2.000	SORGHASTRUM NUTANS	INDIAN GRASS
5.050	**TOTAL WEIGHT OF SEEDS (LBS)**	

COVER CROP:		
1.000	AGROSTIS ALBA PALUSTRIS	BENT GRASS
3.000	LOLIUM MULTIFLORUM	ANNUAL RYE
0.250	POLYGONUM PENNSYLVANICUM	PENNSYLVANIA KNOTWEED

SEEDING, CLASS 4 (MODIFIED) - SEDGE MEADOW

LBS. / ACRE	SCIENTIFIC NAME	COMMON NAME
1.000	AGROSTIS ALBA PALUSTRIS	BENT GRASS
0.500	CALAMAGROSTIS CANADENSIS	BLUE JOINT GRASS
1.000	ELYMUS CANADENSIS	CANADA WILD RYE
1.000	ELYMUS VIRGINICUS	VIRGINIA WILD RYE
1.500	LEERSIA ORYZOIDES	RICE CUT GRASS
0.375	POA PALUSTRIS	MARSH BLUE GRASS
0.500	SPARTINA PECTINATA	PRAIRIE CORD GRASS
0.125	CAREX ANNECTENS XANTHOCARPA	SMALL YELLOW FOX SEDGE
0.125	CAREX BEBBII	BEBB'S SEDGE
0.125	CAREX COMOSA	BOTTLEBRUSH SEDGE
0.125	CAREX CRISTATELLA	CRESTED SEDGE
0.031	CAREX GRANULARIS	PALE SEDGE
0.250	CAREX HYSTERICINA	PORCUPINE SEDGE
0.125	CAREX LUPULIFORMIS	KNOBBED HOP SEDGE
0.125	CAREX PROJECTA	LOOSE-HEADED OVAL SEDGE
0.053	CAREX RETRORSA	RETRORSE SEDGE
0.125	CAREX SCOPARIA	POINTED BROOM SEDGE
0.125	CAREX STIPATA	AWL FRUITED SEDGE
0.031	CAREX URTICULATA	YELLOW LAKE SEDGE
0.500	CAREX VULPINOIDEA	FOX SEDGE
7.740	**TOTAL WEIGHT OF SEEDS (LBS)**	

COVER CROP:		
7.000	ECHINOCHLOA CRUSGALLI	BARNYARD GRASS

SEEDING, CLASS 4 (MODIFIED) - WET TO MESIC PRAIRIE

LBS. / ACRE	SCIENTIFIC NAME	COMMON NAME
1.500	ANDROPOGON GERARDII	BIG BLUESTEM
0.350	CALAMAGROSTIS CANADENSIS	BLUE JOINT GRASS
1.000	ELYMUS VIRGINICUS	VIRGINIA WILD RYE
0.500	GLYCERIA STRIATA	FOWL MANNA GRASS
0.500	HIERCHLOE ODORATA	VANILLA GRASS
1.000	LEERSIA ORYZOIDES	RICE CUT GRASS
0.250	PANICUM VIRGATUM	SWITCH GRASS
0.250	SPARTINA PECTINATA	CORD GRASS
0.125	CAREX ANNECTENS XANTHOCARPA	YELLOW FRUITED SEDGE
0.125	CAREX BEBBII	BEBB'S SEDGE
0.063	CAREX BUXBAUMII	SEDGE
0.125	CAREX NORMALIS	NORMAL SEDGE
0.125	CAREX VULPINOIDEA	FOX SEDGE
5.913	**TOTAL WEIGHT OF SEEDS (LBS)**	

COVER CROP:		
1.000	AGROSTIS ALBA PALUSTRIS	BENT GRASS
3.000	LOLIUM MULTIFLORUM	ANNUAL RYE
0.250	POLYGONUM PENNSYLVANICUM	PENNSYLVANIA KNOTWEED
32.000	AVANA SATIVA	OATS

SEEDING, CLASS 4 (MODIFIED) - DRY TO MESIC PRAIRIE

LBS. / ACRE	SCIENTIFIC NAME	COMMON NAME
2.500	ANDROPOGON SCOPARIUS	LITTLE BLUESTEM
2.000	BOUTELOUA CURTIPENDULA	SIDE OATS
0.250	ELYMUS VIRGINICUS	VIRGINIA WILD RYE
0.060	ERAGROSTIS SPECTABILIS	PURPLE LOVE GRASS
0.150	KOELERIA CRISTATA	JUNE GRASS
1.000	SPOROBOLUS HETEROLEPIS	PRAIRIE DROPSEED
5.960	**TOTAL WEIGHT OF SEEDS (LBS)**	

Cover Crop:		
6.000	LOLIUM MULTIFLORUM	ANNUAL RYE

SEEDING, CLASS 5 (MODIFIED) - FEN

LBS. / ACRE	SCIENTIFIC NAME	COMMON NAME
0.075	AGALINIS PURPUREA	PURPLE FALSE FOXGLOVE
0.750	ANGELICA ATROPURPUREA	GREAT ANGELICA
0.400	ASCLEPIAS INCARNATA	SWAMP MILKWEED
0.075	ASTER LATERIFLORUS	SIDE-FLOWERING ASTER
0.150	ASTER NOVAE-ANGLIAE	NEW ENGLAND ASTER
0.075	ASTER PUNICEUS	BRISTLY ASTER
0.075	ASTER UMBELLATUS	FLAT-TOPPED ASTER
0.075	CACALIA PLANTAGINEA	PRAIRIE INDIAN PLANTAIN
0.075	CALTHA PALUSTRIS	MARSH MARIGOLD
0.150	CHELONE GLABRA	TURTLE HEAD
0.075	CIRCIUM MUTICUM	SWAMP THISTLE
0.150	EUPATORIUM MACULATUM	SPOTTED JOE PYE WEED
0.150	EUPATORIUM PERFOLIATUM	BONESET
0.075	HELENIUM AUTUMNALE	SNEEZEWEED
0.300	IRIS VIRGINICA SHREVEI	BLUE FLAG IRIS
0.075	LYCOPUS AMERICANUS	WATER HOREHOUND
0.075	LYCOPUS VIRGINICUS	BUGLEWEED
0.075	LYSIMACHIA QUADRIFLORA	WHORLED LOOSESTRIFE
0.075	MENTHA ARVENSIS	WILD MINT
0.075	ONOCLEA SENSIBILIS	SENSITIVE FERN
0.075	PEDICULARIS LANCEOLATA	FEN BETONY
0.075	PYCNANTHEMUM VIRGINIANUM	COMMON MOUNTAIN MINT
0.250	ROSA PALUSTRIS	SWAMP ROSE
0.250	RUMEX ORBICULATUS	GREAT WATER DOCK
0.075	SAXIFRAGA PENSYLVANICA	SWAMP SAXIFRAGE
0.250	SCIRPUS ACUTUS	HARD STEM BULRUSH
0.250	SILPHIUM PERFOLIATUM	CUP PLANT
0.075	SOLIDAGO OHIOENSIS	OHIO GOLDENROD
0.150	SOLIDAGO PATULA	SWAMP GOLDENROD
0.250	SOLIDAGO RIDDELLII	RIDDELL'S GOLDENROD
0.150	ZIZIA AUREA	GOLDEN ALEXANDER
4.875	**TOTAL WEIGHT OF SEEDS (LBS)**	

SEEDING, CLASS 5 (MODIFIED) - SEDGE MEADOW

LBS. / ACRE	SCIENTIFIC NAME	COMMON NAME
0.375	ALISMA SUBCORDATAUM	COMMON WATER PLANTAIN
0.063	ASCLEPIAS INCARNATA	SWAMP MILKWEED
0.125	ASTER NOVAE-ANGLIAE	NEW ENGLAND ASTER
0.063	ASTER PUNICEUS	BRISTLY ASTER
0.031	ASTER SIMPLEX	PANICLED ASTER
0.250	BIDENS CERNUA	NODDING BUR MARIGOLD
0.031	CACALIA SUAVEOLENS	SWEET INDIAN PLANTAIN
0.375	ELEOCHARIS OBTUSA	BLUNT SPIKE RUSH
0.031	EPILOBIUM COLORATUM	CINNAMON WILLOW HERB
0.125	EUPATORIUM MACULATUM	SPOTTED JOE PYE WEED
0.031	EUPATORIUM PERFOLIATUM	BONESET
0.125	GENTIANA ANDREWSII	BOTTLE GENTIAN
0.063	HELENIUM AUTUMNALE	SNEEZEWEED
0.031	JUNCUS BALTICUS LITTORALIS	LAKESHORE RUSH
0.031	JUNCUS DUDLEYI	DUDLEY'S RUSH
0.031	JUNCUS EFFUSUS	COMMON RUSH
0.063	JUNCUS TORREYI	TORREY'S RUSH
0.125	LIATRIS SPICATA	MARSH BLAZING STAR
0.063	LYCOPUS AMERICANUS	COMMON WATER HOREHOUND
0.015	LYTHRUM ALATUM	WINGED LOOSESTRIFE
0.031	MIMULUS RINGENS	MONKEY FLOWER
0.125	MONARDA FISTULOSA	WILD BERGAMOT
0.031	ONOCLEA SENSIBILIS	SENSITIVE FERN
0.125	PENSTEMON DIGITALIS	FOXGLOVE BEARDTONGUE
0.150	PENTHORUM SEDOIDES	DITCH STONECROP
0.063	PHYSOSTEGIA VIRGINIANA	OBEDIENT PLANT
0.031	PYCNANTHEMUM VIRGINIANUM	COMMON MOUNTAIN MINT
0.015	ROSA PALUSTRIS	SWAMP ROSE
0.500	SCIRPUS ATROVIRENS	DARK GREEN RUSH
0.063	SCIRPUS CYPERINUS	WOOL GRASS
0.063	SCIRPUS PENDULUS	RED BULRUSH
0.031	SCIRPUS VALIDUS CREBER	SOFT STEM BULRUSH
0.015	SOLIDAGO GIGANTEA	LATE GOLDENROD
0.063	SOLIDAGO OHIOENSIS	OHIO GOLDENROD
0.125	SOLIDAGO RIDDELLII	RIDDELL'S GOLDENROD
0.063	SPHENOPHOLIS INTERMEDIA	SLENDER WEDGE GRASS
0.250	THALICTRUM DASYCARPUM	PURPLE MEADOW RUE
0.250	VERBENA HASTATA	BLUE VERVAIN
0.125	VERNONIA FASCICULATA	COMMON IRONWEED
0.063	ZIZIA AUREA	GOLDEN ALEXANDERS
4.229	**TOTAL WEIGHT OF SEEDS (LBS)**	

SEEDING, CLASS 5 (MODIFIED) - WET TO MESIC PRAIRIE

LBS. / ACRE	SCIENTIFIC NAME	COMMON NAME
0.063	ASCLEPIAS INCARNATA	SWAMP MILKWEED
0.125	ASTER LAEVIS	SMOOTH BLUE ASTER
0.031	ASTER NOVAE-ANGLIAE	NEW ENGLAND ASTER
0.031	ASTER PRAEALTUS	WILLOW ASTER
0.250	BAPTISIA LEUCANTHA	WILD WHITE INDIGO
0.031	CHELONE GLABRA	TURTLE HEAD
0.150	DESMODIUM CANADENSE	SHOWY TICK TREFOIL
0.259	EUPATORIUM MACULATUM	SPOTTED JOE PYE WEED
0.125	EUPATORIUM PERFOLIATUM	BONESET
0.500	HELENIUM AUTUMNALE	SNEEZEWEED
0.063	HYPERICUM PYRAMIDATUM	GREAT ST. JOHN'S WORT
0.125	IRIS VIRGINICA SHREVEI	BLUE FLAG
0.031	JUNCUS DUDLEYI	DUDLEY'S RUSH
0.062	JUNCUS TORREYI	TORREY RUSH
0.313	LIATRIS PYCNOSTACHYA	PRAIRIE GAYFEATHER
0.188	LIATRIS SPICATA	SPIKED GAYFEATHER
0.031	LOBELIA SIPHILITICA	GREAT BLUE LOBELIA
0.063	LYCOPUS AMERICANUS	WATER HOREHOUND
0.031	LYTHRUM ALATUM	WINGED LOOSESTRIFE
0.033	MIMULUS RINGENS	MONKEY FLOWER
0.031	MONARDA FISTULOSA	BERGAMOT
0.031	PENTHORUM SEDOIDES	DITCH STONECROP
0.063	PHYSOSTEGIA VIRGINIANA	FALSE DRAGONHEAD
0.160	PYCNANTHEMUM VIRGINIANUM	COMMON MOUNTAIN MINT
0.250	RUDBECKIA HIRTA	BLACK-EYED SUSAN
0.063	RUDBECKIA LACINIATA	WILD GOLDEN GLOW
0.500	SCIRPUS ATROVIRENS	DARK GREEN RUSH
0.125	SILPHIUM PERFOLIATUM	CUP PLANT
0.063	SOLIDAGO RIDDELLII	RIDDELL'S GOLDENROD
0.125	SOLIDAGO RIGIDA	STIFF GOLDENROD
0.046	VERBENA HASTATA	BLUE VERVAIN
0.031	VERNONIA FASCICULATA	COMMON IRONWEED
0.063	VERONICASTRUM VIRGINICUM	CULVER'S ROOT
0.031	ZIZIA AUREA	GOLDEN ALEXANDER
4.087	**TOTAL WEIGHT OF SEEDS (LBS)**	

SEEDING, CLASS 5 (MODIFIED) - DRY TO MESIC PRAIRIE

LBS. / ACRE	SCIENTIFIC NAME	COMMON NAME
0.125	ALLIUM CERNUUM	NODDING WILD ONION
0.125	AMORPHA CANESCENS	LEAD PLANT
0.125	ANEMONE CANADENSIS	MEADOW ANEMONE
0.060	ARTEMISIA CAUDATA	BEACH WORMWOOD
0.030	ASCLEPIAS SULLIVANTII	PRAIRIE MILKWEED
0.030	ASCLEPIAS TUBEROSA	BUTTERFLY WEED
0.030	ASCLEPIAS VERTICILLATA	WHORLED MILKWEED
0.030	ASTER AZUREUS	SKY BLUE ASTER
0.015	ASTER DUMOSUS	RICE BUTTON ASTER
0.030	ASTER ERICOIDES	HEATH ASTER
0.125	ASTER LAEVIS	SMOOTH BLUE ASTER
0.030	ASTER SERICEUS	SILKY ASTER
0.125	BAPTISIA LEUCANTHA	WHITE INDIGO
0.060	CAREX MUEHLENBERGII	SAND BRACTED SEDGE
0.250	CASSIA FASCICULATA*	PARTRIDGE PEA
0.150	CEANOTHUS AMERICANUS	NEW JERSEY TEA
0.030	CELASTRUS SCANDENS	BITTERSWEET
0.015	COREOPSIS PALMATA	PRAIRIE COREOPSIS
0.060	COREOPSIS TRIPTERIS	TALL COREOPSIS
0.015	DESMODIUM ILLINOIENSIS	ILLINOIS TICKTREFOIL
0.030	ECHINACEA PALLIDA	PALE CONEFLOWER
0.125	ERYNGIUM YUCCIFOLIUM	RATTLESNAKE MASTER
0.060	EUPHORBIA CORROLATA	FLOWERING SPURGE
0.060	HEUCHERA AMERICANA	AMERICAN ALUM ROOT
0.015	KUHNIA EUPATORIOIDES CORYMBULOSA	FALSE BONESET
0.125	LESPEDEZA CAPITATA*	ROUNDHEAD BUSH CLOVER
0.250	LESPEDEZA VIRGINICA	SLENDER BUSH CLOVER
0.030	LIATRIS ASPERA	BLAZING STAR
0.125	PARTHENIUM INTEGRIFOLIUM	WILD QUININE
0.125	PENSTEMON DIGITALIS	FOXGLOVE BEARDTONGUE
0.015	PETALOSTEMUM CANDIDUM	WHITE PRAIRIE CLOVER
0.500	PETALOSTEMUM PUPUREUM	PURPLE PRAIRIE CLOVER
0.030	POTENTILLA ARGUTA	PRAIRIE CINQUEFOIL
0.125	ROSA CAROLINA	PASTURE ROSE
0.500	RUDBECKIA HIRTA	BLACK-EYED SUSAN
0.060	RUDBECKIA SUBTOMENTOSA	SWEET CONEFLOWER
0.030	SILPHIUM LACINIATUM	COMPASS PLANT
0.030	SILPHIUM TEREBINTHINACEUM	PRAIRIE DOCK
0.030	SOLIDAGO GRAMINIFOLIA	GRASS-LEAVED GOLDENROD
0.060	SOLIDAGO JUNCEA	EARLY GOLDENROD
0.125	SOLIDAGO NEMORALIS	OLD-FIELD GOLDENROD
0.015	SOLIDAGO RIGIDA	STIFF GOLDENROD
0.015	SOLIDAGO SPECIOSA	SHOWY GOLDENROD
0.125	TRADESCANTIA OHIENSIS	OHIO SPIDERWORT
0.125	VERBENA STRICTA	HOARY VERVAIN
0.125	VERNONIA FASCICULATA	COMMON IRONWEED
0.030	VERONICASTRUM VIRGINICUM	CULVER'S ROOT
0.125	ZIZIA AUREA	GOLDEN ALEXANDERS
4.470	**TOTAL WEIGHT OF SEEDS (LBS)**	* = INNOCULANT REQUIRED

FILE NAME = W:\Projects\2011\118131 Steamshd2A\roadd\Civil\Dgn\Sht\D_PLT_118131_01.dgn

WILLS BURKE KELSEY ASSOCIATES LTD.
116 West Main Street, Suite 201
St. Charles, Illinois 60174

USER NAME = nparris	DESIGNED - PJF	REVISED -	
	DRAWN - NDP	REVISED -	
PLOT SCALE =	CHECKED - PDK	REVISED -	
PLOT DATE = 8/30/2011	DATE - 8/29/11	REVISED -	

STATE OF ILLINOIS
DEPARTMENT OF TRANSPORTATION

MCLEAN BLVD ENVIRONMENTAL ADAPTIVE MANAGEMENT PLANS
SEEDING & PLANTING SCHEDULES

SCALE: | SHEET NO. 30 OF 54 SHEETS | STA. | TO STA.

F.A.P. RTE.	SECTION	COUNTY	TOTAL SHEETS	SHEET NO.
361	06-00214-11-LS	KANE	54	30
		CONTRACT NO.63638		

FED. ROAD DIST. NO. | ILLINOIS | FED. AID PROJECT

SEEDING SCHEUDLE

SEEDING, CLASS 4 (MODIFIED) - LOW PROFILE PRAIRIE

LBS. / ACRE	SCIENTIFIC NAME	COMMON NAME
3.000	ANDROPOGON SCOPARIUS	LITTLE BLUESTEM GRASS
2.000	BOUTELOUA CURTIPENDULA	SIDE OATS GRAMA GRASS
0.250	ELYMUS VIRGINICUS	VIRGINIA WILD RYE
0.250	KOELERIA CRISTATA	JUNE GRASS
0.250	STIPA SPARTEA	NEEDLE GRASS
5.750	**TOTAL WEIGHT OF SEEDS (LBS)**	

COVER CROP:		
6.000	LOLIUM MULTIFLORUM	ANNUAL RYE

SEEDING, CLASS 5 (MODIFIED) - LOW PROFILE PRAIRIE

LBS. / ACRE	SCIENTIFIC NAME	COMMON NAME
0.125	ALLIUM CERNUUM	NODDING WILD ONION
0.125	AMORPHA CANESCENS	LEAD PLANT
0.063	ANEMONE CANADENSIS	MEADOW ANEMONE
0.063	ASCLEPIAS SULLIVANTII	PRAIRIE MILKWEED
0.126	ASCLEPIAS TUBEROSA	BUTTERFLY WEED
0.063	ASCLEPIAS VERTICILLATA	WHORLED MILKWEED
0.031	ASTER DRUMMONDII	DRUMMOND'S ASTER
0.047	ASTER LAEVIS	SMOOTH BLUE ASTER
0.063	ASTER NOVAE-ANGLIAE	NEW ENGLAND ASTER
0.031	ASTER SERICEUS	SILKY ASTER
0.015	BAPTISIA LEUCANTHA	WILD WHITE INDIGO
0.015	COREOPSIS PALMATA	PRAIRIE COREOPSIS
0.500	ECHINACEA PALLIDA	PALE PURPLE CONEFLOWER
0.125	ERYNGIUM YUCCIFOLIUM	RATTLESNAKE MASTER
0.063	HEUCHERA AMERICANA	AMERICAN ALUM ROOT
0.031	LESPEDEZA CAPITATA*	ROUNDHEAD BUSHCLOVER
0.015	LIATRIS ASPERA	BUTTON BLAZING STAR
0.015	MONARDA FISTULOSA	WILD BERGAMOT
0.125	PENSTEMON DIGITALIS	FOXGLOVE BEARDTONGUE
0.015	PETALOSTEMUM CANDIDUM	WHITE PRAIRIE CLOVER
0.063	PETALOSTEMUM PURPUREUM	PURPLE PRAIRIE CLOVER
0.031	POTENTILLA ARGUTA	PRAIRIE CINQUEFOIL
0.031	PYCNANTHEMUM VIRGINIANUM	COMMON MOUNTAIN MINT
0.500	RUDBECKIA HIRTA	BLACK--EYED SUSAN
0.015	RUDBECKIA SUBTOMENTOSA	SWEET CONEFLOWER
0.125	SOLIDAGO NEMORALIS	OLD-FIELD GOLDENROD
0.500	SOLIDAGO RIGIDA	STIFF GOLDENROD
0.031	SOLIDAGO SPECIOSA	SHOWY GOLDENROD
0.063	TRADESCANTIA OHIENSIS	OHIO SPIDERWORT
0.125	VERBENA STRICTA	HOARY VERVAIN
0.063	ZIZIA AUREA	GOLDEN ALEXANDERS
3.203	**TOTAL WEIGHT OF SEEDS (LBS)**	* = INNOCULANT REQUIRED

SEEDING, CLASS 4 (MODIFIED) - DRY TO MESIC SAVANNA

LBS. / ACRE	SCIENTIFIC NAME	COMMON NAME
0.250	BROMUS LATIGLUMIS	EAR-LEAFED BROME
0.250	BROMUS PUBESCENS	WOODLAND BROME
0.125	CAREX BLANDA	COMMON WOOD SEDGE
0.125	CAREX PENSYLVANICA	COMMON OAK SEDGE
2.000	ELYMUS CANADENSIS	CANADA WILD RYE
0.500	ELYMUS VILLOSUS	SILKY WILD RYE
2.365	ELYMUS VIRGINICUS	VIRGINIA WILD RYE
0.016	FESTUCA OBTUSA	NODDING FESCUE
0.250	HYSTRIX PATULA	BOTTLEBRUSH GRASS
0.250	KOELARIA CRISTATA	JUNE GRASS
6.131	**TOTAL WEIGHT OF SEEDS (LBS)**	

COVER CROP:		
3.000	LOLIUM MULTIFLORUM	ANNUAL RYE

SEEDING, CLASS 5 (MODIFIED) - DRY TO MESIC SAVANNA

LBS. / ACRE	SCIENTIFIC NAME	COMMON NAME
0.016	AGASTACHE NEPETOIDES	YELLOW GIANT HYSSOP
0.016	AGASTACHE SCROPHULARIAEFOLIA	PURPLE GIANT HYSSOP
0.031	ANEMONE CYLINDRICA	THIMBLEWEED
0.250	AQUILEGIA CANADENSIS	COLUMBINE
0.125	ASTER LATERIFLORUS	CALICO ASTER
0.125	ASTER SAGITTIFOLIUS	ARROW-LEAFED ASTER
0.125	ASTER SAGITTIFOLIUS DRUMMONDII	DRUMMOND'S ASTER
0.061	ASTER SHORTII	SHORT'S ASTER
0.061	AUREOLARIA GRANDIFLORA PULCHRA	YELLOW FALSE FOXGLOVE
0.125	BAPTISIA LEUCANTHA	WHITE WILD INDIGO
0.031	CAMPANULA AMERICANA	TALL BELLFLOWER
0.031	CLEMATIS VIRGINIANA	VIRGIN'S BOWER
0.500	ECHINACEA PURPUREA	PURPLE CONEFLOWER
0.125	GERANIUM MACULATUM	WILD GERANIUM
0.125	HELIANTHUS DIVARICATUS	WOODLAND SUNFLOWER
0.016	HYPERICUM PYRAMIDATUM	GREAT ST. JOHN'S WORT
0.062	JUNCUS TENUIS	PATH RUSH
0.125	MONARDA FISTULOSA	WILD BERGAMOT
0.031	PENSTEMON DIGITALIS	FOXGLOVE BEARDTONGUE
0.031	POLYGONATUM CANALICULATUM	SOLOMON'S SEAL
0.016	PYCNANTHEMUM PILOSUM	HAIRY MOUNTAIN MINT
0.125	RATIBIDA PINNATA	YELLOW CONEFLOWER
0.031	ROSA BLANDA	EARLY WILD ROSE
0.250	RUDBECKIA HIRTA	BLACK-EYED SUSAN
0.125	RUDBECKIA SUBTOMENTOSA	SWEET BLACK-EYED SUSAN
0.125	SILPHIUM INTEGRIFOLIUM	ROSINWEED
0.125	SILPHIUM PERFOLIATUM	CUP PLANT
0.031	SMILACINA RACEMOSA	FEATHERY FALSE SOLOMON'S SEAL
0.125	SOLIDAGO FLEXICAULIS	ZIGZAG GOLDENROD
0.125	SOLIDAGO JUNCEA	EARLY GOLDENROD
0.125	SOLIDAGO ULMIFOLIA	ELM-LEAFED GOLDENROD
0.125	TEUCRIUM CANADENSE	GERMANDER
0.062	THASPIUM BARBINODE	HAIRY MEADOW PARSNIP
0.125	TRADESCANTIA OHIENSIS	SPIDERWORT
0.031	TRIOSTEUM PERFOLIATUM	LATE HORSE GENTIAN
0.063	VERBENA URTICIFOLIA	WHITE VERVAIN
0.061	VERONICASTRUM VIRGINICUM	CULVER'S ROOT
0.062	ZIZIA AUREA	GOLDEN ALEXANDERS
3.744	**TOTAL WEIGHT OF SEEDS (LBS)**	

PERENNIAL PLANTS, SEDGE MEADOW TYPE

PLANTS/ACRE	SCIENTIFIC NAME	COMMON NAME	# OF CLUMPS
500	ACORUS CALAMUS	SWEET FLAG	3
1,000	ALISMA SUBCORDATAUM	COMMON WATER PLANTAIN	6
1,500	ANDROPOGON GERARDII	BIG BLUESTEM	8
500	ASCLEPIAS INCARNATA	SWAMP MILKWEED	4
500	ASTER NOVAE-ANGLIAE	NEW ENGLAND ASTER	3
500	ASTER PUNICEUS FIRMUS	SHINING ASTER	3
500	ASTER UMBRELLATUS	FLAT-TOPPED ASTER	3
1,500	CALAMAGROSTIS CANADENSIS	BLUE JOINT GRASS	8
200	CALTHA PALUSTRIS	MARSH MARIGOLD	2
500	CAREX BEBBII	BEBB'S SEDGE	3
200	CAREX BUXBAUMII	DARK-SCALED SEDGE	2
200	CAREX GRANULARIS	PALE SEDGE	2
1,500	CAREX HYSTERICINA	PORCUPINE SEDGE	8
500	CAREX LUPULIFORMIS	KNOBBED HOP SEDGE	3
200	CAREX PELLITA	BROAD-LEAVED WOOLY SEDGE	2
500	CAREX SCOPARIA	POINTED BROOM SEDGE	4
1,000	CAREX STIPATA	AWL FRUITED SEDGE	6
200	CAREX STRICTA	STRICT SEDGE	2
1,500	CAREX VULPINOIDEA	FOX SEDGE	8
200	CHELONE GLABRA	TURTLEHEAD	2
500	EUPATORIUM MACULATUM	SPOTTED JOE PYE WEED	3
500	EUPATORIUM PERFOLIATUM	BONESET	3
200	HELENIUM AUTUMNALE	SNEEZEWEED	2
500	IRIS VIRGINICA SHREVEI	BLUE FLAG IRIS	3
500	JUNCUS DUDLEYI	DUDLEY'S RUSH	3
200	LOBELIA SIPHILLITICA	GREAT BLUE LOBELIA	2
200	LYCOPUS AMERICANUS	WATER HOREHOUND	2
200	MENTHA ARVENSIS	WILD MINT	2
100	PENDICULARIS LANCEOLATA	FEN BETONY	2
500	PYCNANTHEMUM VIRGINIANUM	MOUNTIAN MINT	4
1,000	SCIRPUS ACUTUS	HARD STEM BULRUSH	6
500	SILPHIUM PERFOLIATUM	CUP PLANT	3
500	SOLIDAGO GIGANTEA	LATE GOLDENROD	3
200	SOLIDAGO OHIOENSIS	OHIO GOLDENROD	2
200	SOLIDAGO PATULA	SWAMP GOLDENROD	2
500	SOLIDAGO RIDDELLII	RIDDELL'S GOLDENROD	3
500	SYMPLOCARPUS FOETIDUS	SKUNK CABBAGE	3
20,000	**TOTAL NUMBER OF PLANTS PER ACRE**		

NOTES: PERENNIAL PLANTS WILL BE PLANTED 12" ON CENTER IN A TRIANGULAR SPACING PATTERN. CLUMPS WILL CONTAIN ONE PLANT SPECIES AND VARY IN SIZE FROM 50 SQUARE FEET AND 200 SQUARE FEET.

PERENNIAL PLANTS, PRAIRIE TYPE

RATE / ACRE	SCIENTIFIC NAME	COMMON NAME
1000	ALLIUM CERNUUM	NODDING WILD ONION
5000	ANDROPOGON SCOPARIUS	LITTLE BLUESTEM
2000	ASCLEPIAS TUBEROSA	BUTTERFLY WEED
3000	ASTER LAEVIS	SMOOTH BLUE ASTER
1000	BAPTISIA LEUCANTHA	WILD WHITE INDIGO
3000	BOUTELOUA CURTIPENDULA	SIDE OATS GRAMA
1000	COREOPSIS LANCEOLATA	SAND COREOPSIS
5000	ECHINACEA PURPUREA	PURPLE CONEFLOWER
2000	ERYNGIUM YUCCIFOLIUM	RATTLESNAKE MASTER
3000	LIATRIS ASPERA	BUTTON BLAZING STAR
3000	MONARDA FISTULOSA	BERGAMOT
5000	PANICUM VIRGATUM	SWITCH GRASS
2000	PARTHENIUM INTEGRIFOLIUM	WILD QUININE
2000	PENSTEMON DIGITALIS	FOXGLOVE BEARDTOUNGE
5000	RATIBIDA PINNATA	YELLOW CONEFLOWER
5000	SPOROBOLUS HETEROLEPIS	PRAIRIE DROPSEED
1000	VERONICASTRUM VIRGINICUM	CULVER'S ROOT
1000	ZIZIA AUREA	GOLDEN ALEXANDERS
50,000	**TOTAL NUMBER OF PLANTS PER ACRE**	

NOTES: PERENNIAL PLANTS WILL BE PLANTED 12" ON CENTER IN A TRIANGULAR SPACING PATTERN. CLUMPS WILL CONTAIN ONE PLANT SPECIES AND VARY IN SIZE FROM 20 SQUARE FEET AND 40 SQUARE FEET.

PLANTING SCHEDULE

SHRUBS

CODE	SCIENTIFIC NAME	COMMON NAME
CM	CORYLUS AMERICANA	AMERICAN FILBERT
RG	RHUS GLABRA	SMOOTH SUMAC
RT	RHUS TYPHINA	STAGHORN SUMAC
VP	VIBURNUM PRUNIFOLIUM	BLACKHAW VIBURNUM

TREES

CODE	SCIENTIFIC NAME	COMMON NAME
MI	MALUS IOENSIS	IOWA CRABAPPLE
CO	CARYA OVATA	SHAGBARK HICKORY
CN	CERCIS CANADENSIS	EASTERN REDBUD
GD	GYMNOCLADUS DIOICUS	KENTUCKY COFFEETREE
OV	OSTRYA VIRGINIANA	AMERICAN HOPHORNBEAM
QA	QUERCUS ALBA	WHITE OAK
QB	QUERCUS BICOLOR	SWAMP WHITE OAK
QM	QUERCUS MACROCARPA	BUR OAK
QR	QUERCUS RUBRA	RED OAK

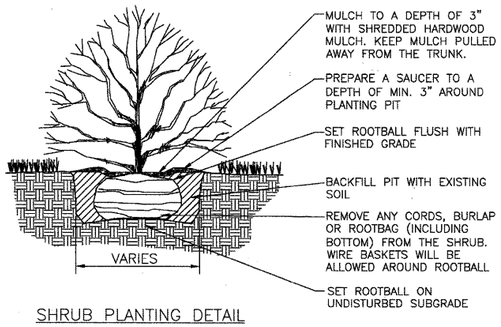

SHRUB PLANTING DETAIL

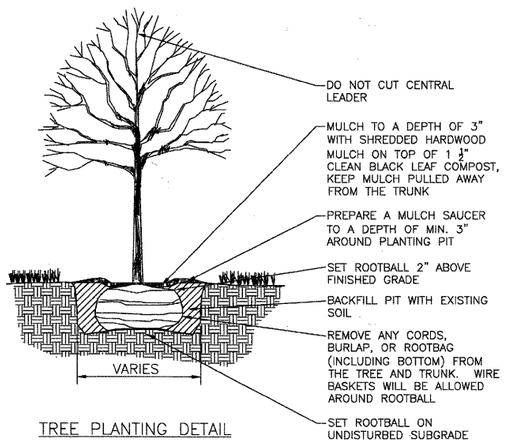

TREE PLANTING DETAIL

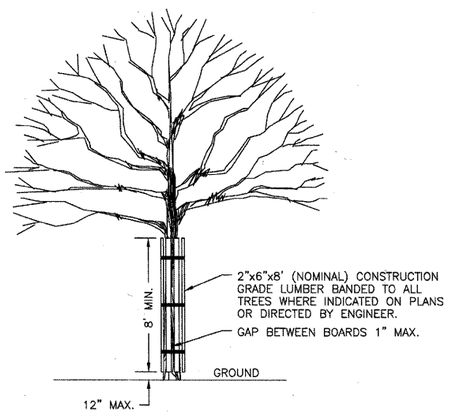

TREE TRUNK PROTECTION

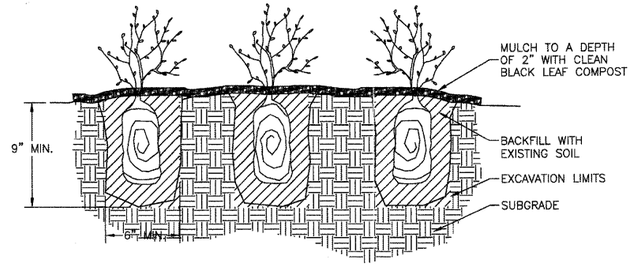

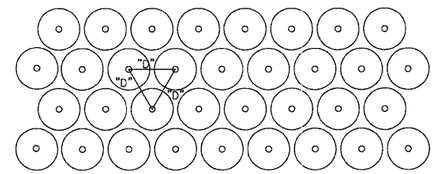

D= DIMENSIONS OF PLANT SPACING AS INDICATED ON PLANS.

SPREAD MULCH TO THE DEPTH SPECIFIED. DO NOT APPLY FERTILIZER. USE APPROPRIATE TOOLS TO EXCAVATE PLANTING HOLES IN A STAGGERED PATTERN.

EVENLY DISTRIBUTE GRASSES THROUGH PLANTING. PLANT FORBS IN DRIFTS OF ONE SPECIES WITH THE EDGES BLENDED INTO THE ADJACENT SPECIES.

PLANT PLUGS LEVEL WITH EXISTING GRADE. SOIL SHALL BE PLACED AROUND PLUGS AND FIRMED INTO PLACE. DO NOT FILL AROUND PLUGS WITH MULCH.

THOUROUGHLY SOAK PLUGGED AREA WITH WATER UNTIL SOIL IS MOIST TO A DEPTH OF 4 INCHES.

TRIANGLE ARRANGEMENT
PLUG PLANTING DETAIL

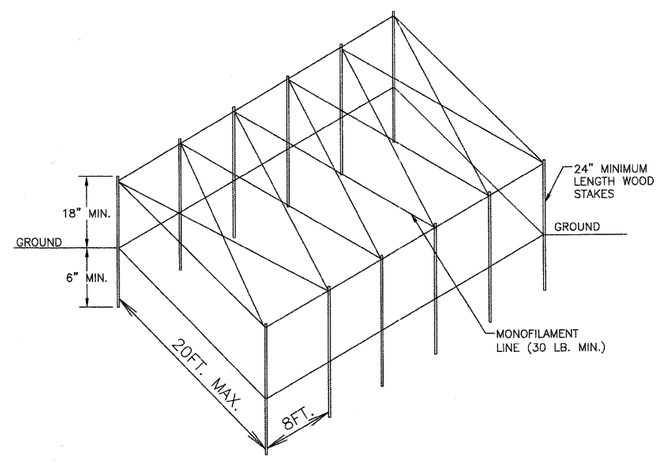

DIMENSIONS OF THE ENCLOSURES WILL BE DETERMINED BY CONTRACTOR OR ENGINEER BASED ON THE SPACING OF PLANTS BEING PROTECTED.

THE FENCE SHALL BE PRESSED ONE TO TWO INCHES INTO THE SOIL (EVEN IN WATER) SO THAT NO GAPS ARE PRESENT FOR WATERFOWL OR SMALL MAMMALS TO ENTER.

TO BE PAID FOR AS PLANTER FENCE, SPECIAL 1.

PLANTER FENCE DETAIL

TEMPORARY FENCE

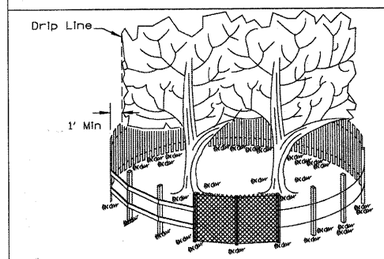

SIDE VIEW

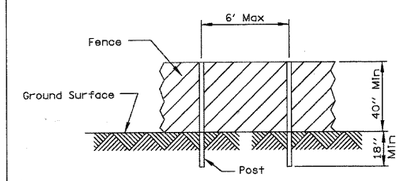

POST AND FENCE DETAIL

NOTES:
1. The fence shall be located a minimum of 1 foot outside the drip line of the tree to be saved and in no case closer than 5 feet to the trunk of any tree.
2. Fence posts shall be either standard steel posts or wood posts with a minumum cross sectional area of 3.0 sq. in.
3. The fence may be either 40" high snow fence, 40" plastic web fencing or any other material as approved by the engineer/inspector.

REFERENCE				STANDARD DWG. NO.
Project NEW STEARNS ROAD	NRCS Natural Resources Conservation Service			IL-690
Designed MSK Date				SHEET 1 OF 1
Checked JWW Date				DATE 4-7-94
Approved Date				

LANDSCAPE INSTALLATION SCHEDULE

STABILIZATION TYPE	JAN.	FEB.	MAR.	APR.	MAY	JUNE	JULY	AUG.	SEPT.	OCT.	NOV.	DEC.
CLASS 1B SEEDING				+	—	—		+	—	—		
CLASS 2A** SEEDING				+	—	—		+	—	—		
CLASS 4 & 5 SEEDING*					+	—				+	—	
PERENNIAL PLANTING *				+	—	—		+	—			
EROSION CONTROL	+	—	—	—	—	—	—	—	—	—	—	—

* IRRIGATION NEEDED DURING JUNE AND JULY.
** IRRIGATION NEEDED FOR 2 TO 3 WEEKS AFTER APPLYING SEED.

FILE NAME = W:\Projects\2011\10131 Stearns Rd2A\cadd\Civil\Dgn\Sht\D_PLT_10131_03.dgn

WILLS BURKE KELSEY ASSOCIATES LTD. 116 West Main Street, Suite 201 St. Charles, Illinois 60174	USER NAME = nparris	DESIGNED - PJF	REVISED -
		DRAWN - NDP	REVISED -
	PLOT SCALE =	CHECKED - PDK	REVISED -
	PLOT DATE = 8/30/2011	DATE - 8/29/11	REVISED -

STATE OF ILLINOIS
DEPARTMENT OF TRANSPORTATION

MCLEAN BLVD ENVIRONMENTAL ADAPTIVE MANAGEMENT PLANS
SEEDING & PLANTING DETAILS

SCALE: | SHEET NO. 32 OF 54 SHEETS | STA. | TO STA.

F.A.P. RTE.	SECTION	COUNTY	TOTAL SHEETS	SHEET NO.
361	06-00214-11-LS	KANE	54	32
		CONTRACT NO.63638		
FED. ROAD DIST. NO.	ILLINOIS	FED. AID PROJECT		

MATCH LINE SEE SHEET SOIL EROSION & SEDIMENT CONTROL PLAN SHEET 3

MATCH LINE SEE SHEET SOIL EROSION & SEDIMENT CONTROL PLAN SHEET 2

TREE TRUNK PROTECTION (TYP.)

WETLAND BOUNDARY (TYP.)

STABILIZED CONSTRUCTION ENTRANCE, 25'x140'

LANCASTER CIR

MCLEAN BLVD

AGGREGATE DITCH CHECK (TYP.)

TEMPORARY FENCE (TYP.)

EROSION CONTROL BLANKET WITHIN GRADING LIMITS (TYP.)

INLET & PIPE PROTECTION (TYP.)

PERIMETER EROSION BARRIER 1443 LF

TEMPORARY DITCH CHECK (TYP.)

EROSION CONTROL MULCH METHOD 2 (TYP.)

KEY MAP

N

GRAPHIC SCALE

FEET

50 0 50 100

LEGEND

- EROSION CONTROL BLANKET 20331 SQ YD
- EROSION CONTROL MULCH METHOD 2 79025.7 SQ YD
- 124" TREE TRUNK PROTECTION & SIZE
- INLET & PIPE PROTECTION (TEMPORARY)
- PERIMETER EROSION BARRIER (TEMPORARY)
- TEMPORARY FENCE 1443 LF
- TEMPORARY DITCH CHECK
- AGGREGATE DITCH CHECK

FILE NAME = W:\Projects\2011\110131 Steams&Rd2A\cadd\Civil\Dgn\Sht\SESC_110131.01.dgn

WILLS BURKE KELSEY ASSOCIATES LTD.
116 West Main Street, Suite 201
St. Charles, Illinois 60174

USER NAME = nporris	DESIGNED - PJF	REVISED -	
	DRAWN - NDP	REVISED -	
PLOT SCALE = 1"=50'	CHECKED - PDK	REVISED -	
PLOT DATE = 8/30/2011	DATE - 8/29/11	REVISED -	

STATE OF ILLINOIS
DEPARTMENT OF TRANSPORTATION

MCLEAN BLVD ENVIRONMENTAL ADAPTIVE MANAGEMENT PLANS
SOIL EROSION & SEDIMENT CONTROL PLAN

SCALE: 1"=50' | SHEET NO. 1 OF 3 SHEETS | STA. TO STA.

F.A.P. RTE.	SECTION	COUNTY	TOTAL SHEETS	SHEET NO.
361	06-00214-11-LS	KANE	54	33
		CONTRACT NO.63638		
FED. ROAD DIST. NO.	ILLINOIS	FED. AID PROJECT		

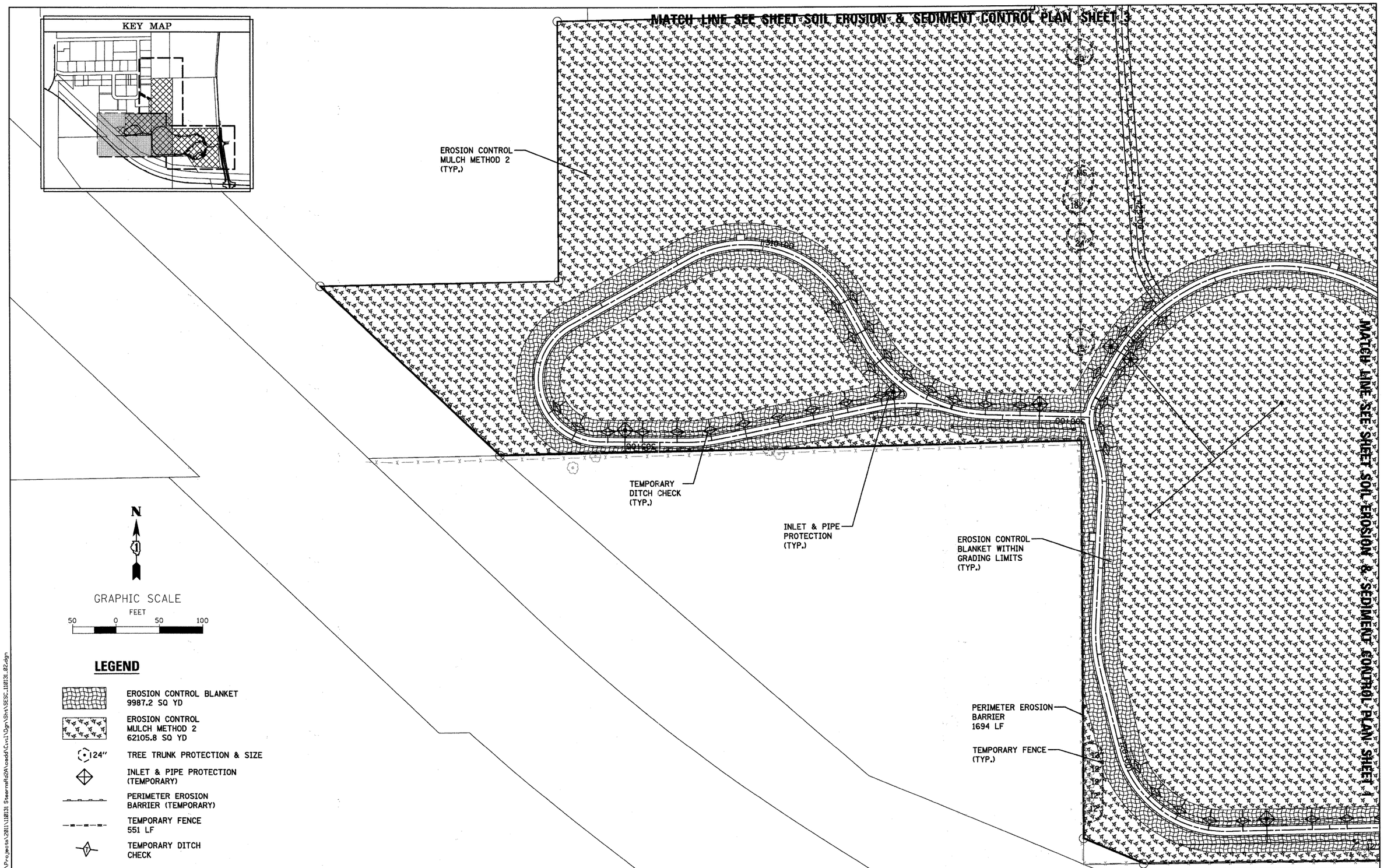

LEGEND

- EROSION CONTROL BLANKET 9987.2 SQ YD
- EROSION CONTROL MULCH METHOD 2 62105.8 SQ YD
- 24" TREE TRUNK PROTECTION & SIZE
- INLET & PIPE PROTECTION (TEMPORARY)
- PERIMETER EROSION BARRIER (TEMPORARY)
- TEMPORARY FENCE 551 LF
- TEMPORARY DITCH CHECK

FILE NAME = W:\Projects\2011\110131 Steamer Rd2A\cadd\Civil\Dgn\Sht\SESC_110131_02.dgn

WILLS BURKE KELSEY ASSOCIATES LTD.
116 West Main Street, Suite 201
St. Charles, Illinois 60174

USER NAME = nparris	DESIGNED - PJF	REVISED -	
	DRAWN - NDP	REVISED -	
PLOT SCALE = 1"=50'	CHECKED - PDK	REVISED -	
PLOT DATE = 8/30/2011	DATE - 8/29/11	REVISED -	

STATE OF ILLINOIS
DEPARTMENT OF TRANSPORTATION

MCLEAN BLVD ENVIRONMENTAL ADAPTIVE MANAGEMENT PLANS
SOIL EROSION & SEDIMENT CONTROL PLAN

SCALE: 1"=50' | SHEET NO. 2 OF 3 SHEETS | STA. TO STA.

F.A.P. RTE.	SECTION	COUNTY	TOTAL SHEETS	SHEET NO.
361	06-00214-11-LS	KANE	54	34
		CONTRACT NO.63638		
FED. ROAD DIST. NO.	ILLINOIS	FED. AID PROJECT		

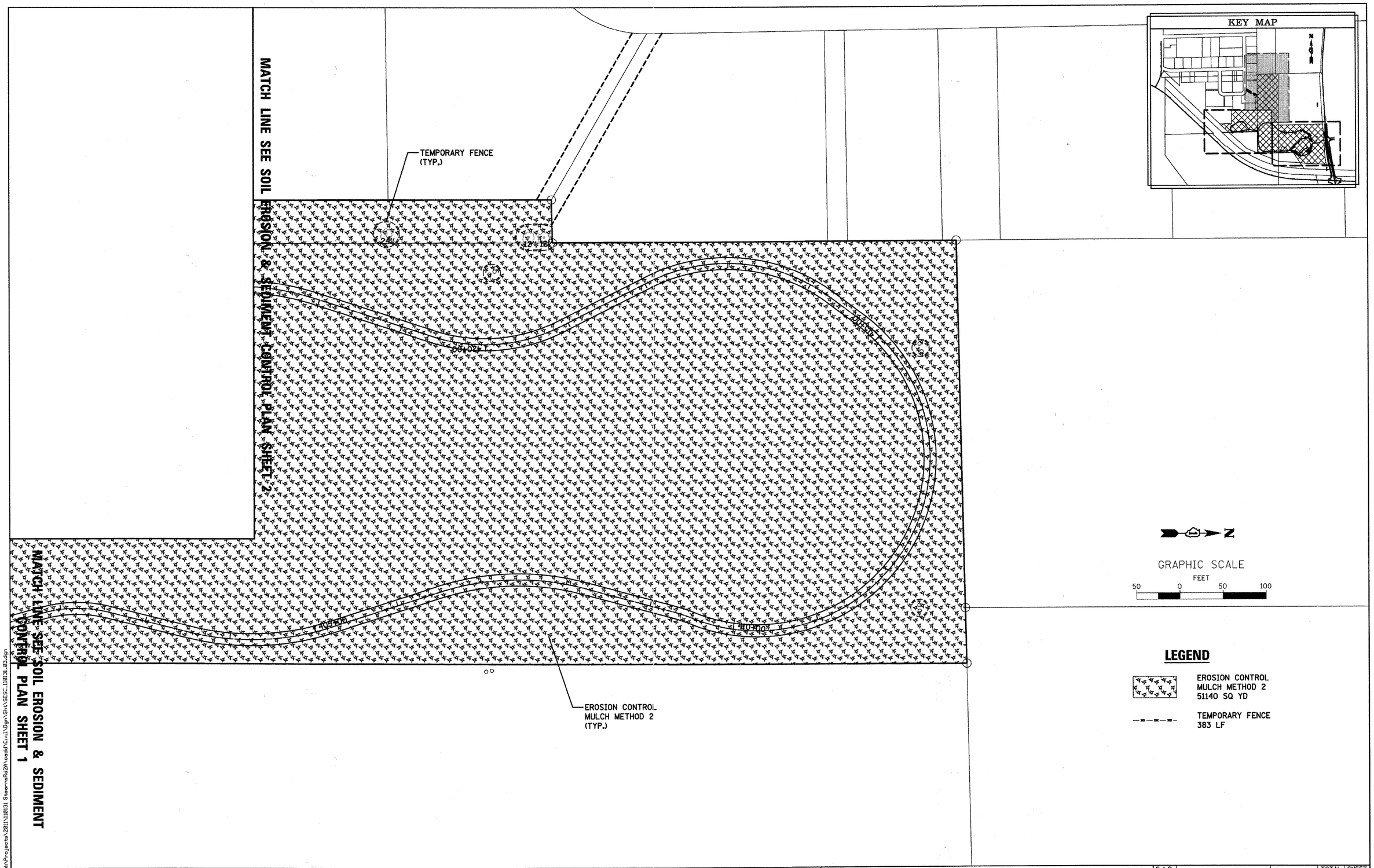

FILE NAME = W:\Projects\2011\110131 StearnsRd2A\cadd\Civil\Dgn\Sht\SESC_110131_03.dgn

WILLS BURKE KELSEY ASSOCIATES LTD. 116 West Main Street, Suite 201 St. Charles, Illinois 60174	USER NAME = nparris	DESIGNED - PJF	REVISED -	STATE OF ILLINOIS DEPARTMENT OF TRANSPORTATION	MCLEAN BLVD ENVIRONMENTAL ADAPTIVE MANAGEMENT PLANS SOIL EROSION & SEDIMENT CONTROL PLAN	F.A.P. RTE. 361	SECTION 06-00214-11-LS	COUNTY KANE	TOTAL SHEETS 54 / SHEET NO. 35
		DRAWN - NDP	REVISED -					CONTRACT NO.63638	
	PLOT SCALE = 1"=50'	CHECKED - PDK	REVISED -		SCALE: 1"=50' / SHEET NO. 3 OF 3 SHEETS / STA. TO STA.	FED. ROAD DIST. NO.	ILLINOIS	FED. AID PROJECT	
	PLOT DATE = 8/30/2011	DATE - 8/29/11	REVISED -						

EROSION CONTROL INSPECTION

ALL EROSION CONTROL MEASURES MUST BE INSPECTED WEEKLY AND AFTER EACH 1/2" RAIN EVENT.

WINTER SHUT DOWN

A WINTER SHUT DOWN IS NOT ANTICIPATED FOR THIS PROJECT. BUT IN THE EVENT THAT UNAVOIDABLE CIRCUMSTANCE REQUIRE A WINTER SHUT DOWN, THE CONDITION OF THE CONSTRUCTION SITE FOR WINTER SHUTDOWN SHALL BE ADDRESSED EARLY IN THE FALL GROWING SEASON SO THAT SLOPES AND OTHER BARE EARTH AREAS MAY BE STABILIZED WITH TEMPORARY AND/OR PERMANENT VEGETATIVE COVER FOR PROPER EROSION AND SEDIMENT CONTROL. ALL OPEN AREAS THAT ARE TO REMAIN IDLE THROUGHOUT THE WINTER SHALL RECEIVE TEMPORARY EROSION CONTROL MEASURES INCLUDING TEMPORARY SEEDING, MULCHING AND/OR EROSION CONTROL BLANKET PRIOR TO THE END OF THE FALL GROWING SEASON. THE AREAS TO BE WORKED BEYOND THE END OF THE GROWING SEASON MUST INCORPORATE SOIL STABILIZATION MEASURES THAT DO NOT RELY ON VEGETATIVE COVER SUCH AS EROSION CONTROL BLANKET AND HEAVY MULCHING.

TEMPORARY DITCH CHECKS

TEMPORARY DITCH CHECKS WILL BE REQUIRED AT THOSE LOCATIONS WHERE THE CONTRACTORS OPERATIONS REQUIRE TEMPORARY OR PERMENTENT DITCHES. THE LOCATION OF TEMPORARY DITCH CHECKS ARE SHOWN ON THE PLANS. THE EXACT LOCATION MAY REQUIRE FIELD ADJUSTMENT AND WILL BE COORDINATED IN THE FIELD WITH THE ENGINEER. THE QUANTITIES INCLUDE A PLAN ALLOWANCE OF EIGHT (8) ADDITIONAL TEMPORARY DITCH CHECKS FOR MAINTENANCE PURPOSES.

PERIMETER EROSION BARRIER (SILT FENCE)

PERIMETER EROSION CONTROL BARRIER (SILT FENCE) SHALL BE PLACED AT THE LOCATIONS SHOWN ON THE PLANS. THE PERIMETER EROSION CONTROL BARRIER SHALL BE CONSTRUCTED AS DETAIL ON IDOT STANDARD 280001 AND AS SPECIFIED IN SECTION 280 OF THE STANDARD SPECIFICATIONS FOR ROAD AND BRIDGE CONSTRUCTION, LATEST EDITION.

STOCK PILE LOCATIONS AND PROTECTING STOCK PILE AREAS

STOCK PILES SHOULD BE BE PLACED IN OR NEAR CRITICAL AREAS, OR AREAS THAT HAVE HIGH POTENTIAL FOR CONTRIBUTING SEDIMENTS TO STROMWATER FACILTIES.

CONTRACTOR MAY OPT TO STOCK PILES MATERIAL. STAGING OF THE PROJECT IS AT HIS DISCRETION OF THE CONTRACTOR AND COORDINATION OF STOCK PILES WILL BE WITH ELGIN TOWNSHIP AND KANE-DUPAGE SOIL AND WATER CONSERVATION DISTRICT (KDSWCD). STOCKPILES OF SOIL AND OTHER CONSTRUCTION MATERIALS TO REMAIN IN PLACE MORE THAN THREE (3) DAYS SHALL BE FURNISHED WITH EROSION AND SEDIMENT CONTROL MEASURES (I.E. PERIMETER SILT FENCE). STOCKPILES, NOT BEING ACTIVELY WORKED AND TO REMAIN IN PLACE FOR 14 DAYS OR MORE SHALL RECEIVE TEMPORARY SEEDING.

STABILIZED CONSTRUCTION AREA

STABILIZATION OF THE CONSTRUCTION AREA SHOULD TAKE PLACE AT THE END OF EACH WORK DAY.

WORK IN FLOWING WATER

NO WORK SHALL BE PERFORMED IN FLOWING WATER. WORK IN AND NEAR THE CRITICAL AREAS SHOULD BE ISOLATED FROM CONCENTRATED FLOWS OR STREAM FLOW. ONCE WORK IN THIS AREA BEGINS, PRIORITY SHALL BE GIVEN TO THE COMPLETION OF THE WORK AND FINAL STABILIZATION OF ALL DISTURBED AREAS

KEEPING PAVEMENTS CLEAN

THE CONTRACTOR WILL KEEP ALL PERMANENT PAVEMENT SURFACES CLEAN OF DIRT OR CONSTRUCTION DEBRIS. THE PAVEMENT SHALL BE CLEANED AT THE END OF EACH DAYS OPERATION OR MORE FREQUENTLY AS REQUIRED BY THE ENGINEER IF THE DEBRIS IS DEEMED TO BE A HAZARD TO THE MOTORING PUBLIC.

GENERAL NOTES

A) UNLESS OTHERWISE INDICATED, ALL VEGETATIVE AND STRUCTURAL EROSION AND SEDIMENT CONTROL PRACTICES WILL BE CONSTRUCTED ACCORDING TO MINIMUM STANDARDS AND SPECIFICATIONS IN THE ILLINOIS URBAN MANUAL REVISED FEBRUARY 2002.

B) THE KANE-DUPAGE SOIL AND WATER CONSERVATION DISTRICT (KDSWCD) MUST BE NOTIFIED ONE WEEK PRIOR TO THE PRE-CONSTRUCTION CONFERENCE, ONE WEEK PRIOR TO THE COMMENCEMENT OF LAND DISTURBING ACTIVITIES, AND ONE WEEK PRIOR TO THE FINAL INSPECTION.

C) A COPY OF THE APPROVED EROSION AND SEDIMENT CONTROL PLAN SHALL BE MAINTAINED ON THE SITE AT ALL TIMES.

D) PRIOR TO COMMENCING LAND-DISTURBING ACTIVITIES IN AREAS OTHER THAN INDICATED ON THESE PLANS (INCLUDING BUT NOT LIMITED TO, ADDITIONAL PHASES OF DEVELOPMENT AND OFF-SITE BORROW OR WASTE AREAS) A SUPPLEMENTARY EROSION CONTROL PLAN SHALL BE SUBMITTED TO THE OWNER FOR REVIEW BY THE KDSWCD.

E) THE CONTRACTOR IS RESPONSIBLE FOR INSTALLATION OF ANY ADDITIONAL EROSION CONTROL MEASURES NECESSARY TO PREVENT EROSION AND SEDIMENTATION AS DETERMINED BY THE KDSWCD.

F) DURING DEWATERING OPERATIONS, WATER WILL BE PUMPED INTO SEDIMENT BASINS OR SILT TRAPS. DEWATERING DIRECTLY INTO FIELD TILES, STORMWATER STRUCTURES, OR OTTER CREEK IS PROHIBITED.

G) IT IS THE RESPONSIBILITY OF THE LANDOWNER AND/OR GENERAL CONTRACTOR TO INFORM ANY SUB-CONTRACTOR(S) WHO MAY PERFORM WORK ON THIS PROJECT, OF THE REQUIREMENTS IN IMPLEMENTING AND MAINTAINING THESE EROSION CONTROL PLANS AND THE NATIONAL POLLUTANT DISCHARGE ELIMINATION SYSTEM (NPDES) PERMIT REQUIREMENTS SET FORTH BY THE ILLINOIS EPA.

PERIMETER EROSION BARRIER PLAN

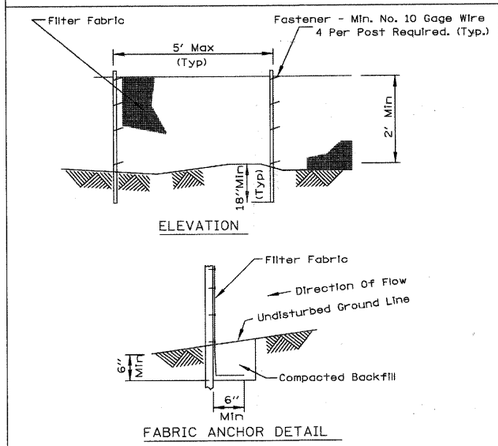

NOTES:
1. Temporary sediment fence shall be installed prior to any grading work in the area to be protected. They shall be maintained throughout the construction period and removed in conjunction with the final grading and site stabilization.
2. Filter fabric shall meet the requirements of material specification Article 1080.02
3. Fence posts shall be either standard steel post or wood post with a minimum cross-sectional area of 3.0 sq. in.

REFERENCE			STANDARD DWG. NO.
Project NEW STEARNS ROAD	NRCS Natural Resources Conservation Service		IL-620
Designed MSK Date			SHEET 1 OF 2
Checked JWW Date			DATE 11-20-01
Approved Date			

STABILIZED CONSTRUCTION ENTRANCE PLAN

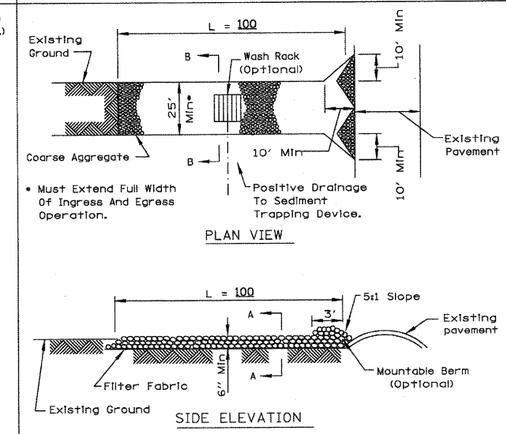

NOTES:
1. Filter fabric shall meet the requirements of material specification Article 1080.03
2. Rock or reclaimed concrete shall meet one of the following IDOT coarse aggregate gradation, ~~CA-1, CA-2,~~ CA-3 or ~~CA-4~~ and be placed according to Article 281.4
3. Any drainage facilities required because of washing shall be constructed according to manufacturers specifications.
4. If wash racks are used they shall be installed according to the manufacturer's specifications.

REFERENCE			STANDARD DWG. NO.
Project NEW STEARNS ROAD	NRCS Natural Resources Conservation Service		IL-630
Designed MSK Date			SHEET 1 OF 2
Checked JWW Date			DATE 8-18-94
Approved Date			

PERIMETER EROSION BARRIER

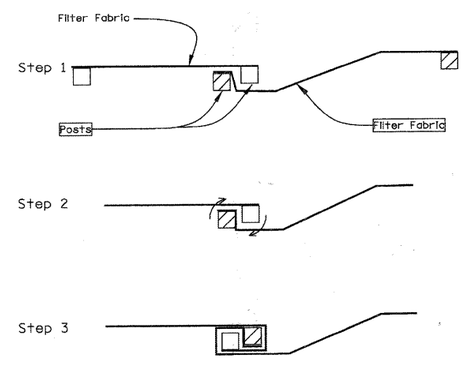

ATTACHING TWO SILT FENCES

NOTES:
1. Place the end post of the second fence inside the end post of the first fence.
2. Rotate both posts at least 180 degrees in a clockwise direction to create a tight seal with the fabric material.
3. Drive both posts a minimum of 18 inches into the ground and bury the flap.

REFERENCE			STANDARD DWG. NO.
Project NEW STEARNS ROAD	NRCS Natural Resources Conservation Service		IL-620(W)
Designed MSK Date			SHEET 2 OF 2
Checked JWW Date			DATE 1-29-99
Approved Date			

STABILIZED CONSTRUCTION ENTRANCE PLAN

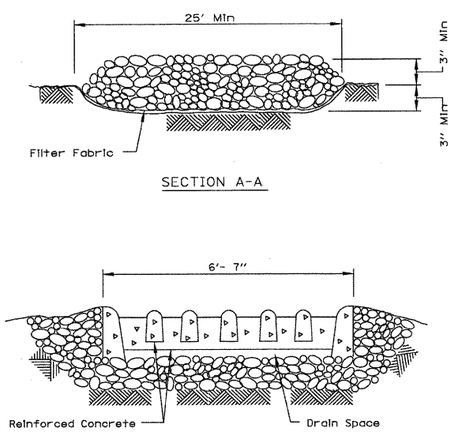

REFERENCE			STANDARD DWG. NO.
Project NEW STEARNS ROAD	NRCS Natural Resources Conservation Service		IL-630
Designed MSK Date			SHEET 2 OF 2
Checked JWW Date			DATE 8-18-94
Approved Date			

FILE NAME = W:\Projects\2011\11131 StearnsRd2A\cadd\Civil\Dgn\Sht\D.SESC_11131_01.dgn

WILLS BURKE KELSEY ASSOCIATES LTD.
116 West Main Street, Suite 201
St. Charles, Illinois 60174

USER NAME = nparris	DESIGNED - PJF	REVISED -	
	DRAWN - NDP	REVISED -	
PLOT SCALE =	CHECKED - PDK	REVISED -	
PLOT DATE = 8/30/2011	DATE - 8/29/11	REVISED -	

STATE OF ILLINOIS
DEPARTMENT OF TRANSPORTATION

MCLEAN BLVD ENVIRONMENTAL ADAPTIVE MANAGEMENT PLANS
SOIL EROSION & SEDIMENT CONTROL DETAILS

SCALE: | SHEET NO. 36 OF 54 SHEETS | STA. | TO STA.

F.A.P. RTE.	SECTION	COUNTY	TOTAL SHEETS	SHEET NO.
361	06-00214-11-LS	KANE	54	36
		CONTRACT NO.63638		
FED. ROAD DIST. NO.	ILLINOIS	FED. AID PROJECT		

EROSION CONTROL BLANKET PLAN

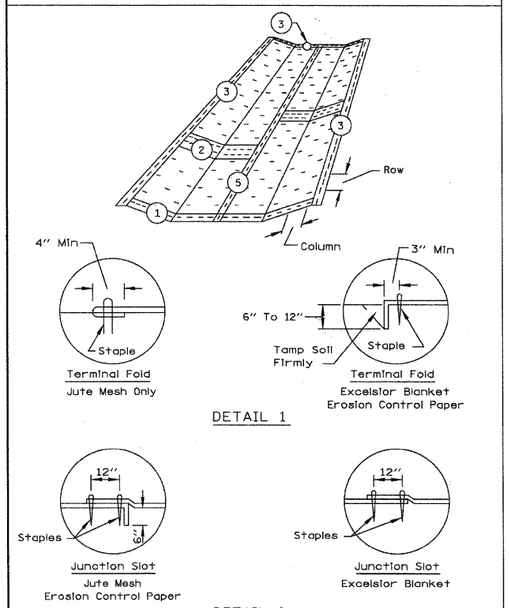

REFFERENCE			STANDARD DWG. NO.
Project NEW STEARNS ROAD	NRCS Natural Resources Conservation Service		IL-530
Designed MSK Date			SHEET 1 OF 2
Checked JWW Date			DATE 5-24-94
Approved Date			

EROSION CONTROL BLANKET PLAN

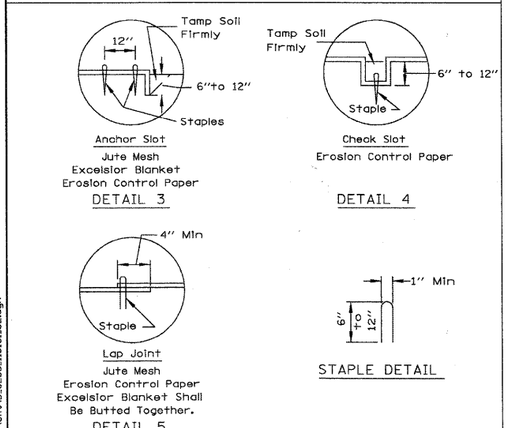

NOTES:

1. On erosion control paper, check slots, in ditch channel shall be spaced so that one occurs within each 50' on slopes of more than 4% and less than 6%. On slopes of 6% or more, they shall be spaced so that one occurs within each 25'.
2. Staples are to be placed alternately, in columns approximately 2' apart and in rows approximately 3' apart. Approximately 175 staples are required per 4'x 225' roll of material and 125 staples are required per 4'x 150' roll of material.
3. Erosion control material shall be placed loosely over ground surface. Do not stretch.
4. All terminal ends and transverse laps shall be stapled at approximately 12" intervals.

REFFERENCE			STANDARD DWG. NO.
Project NEW STEARNS ROAD	NRCS Natural Resources Conservation Service		IL-530
Designed MSK Date			SHEET 2 OF 2
Checked JWW Date			DATE 3-1-95
Approved Date			

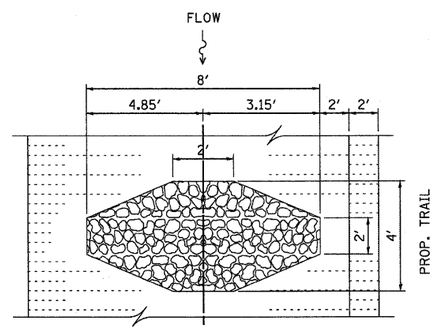

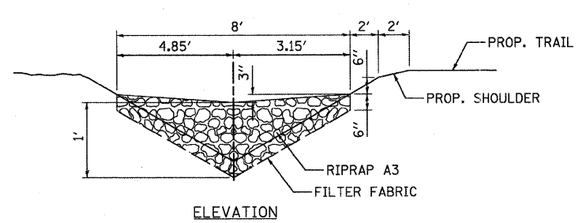

AGGREGATE DITCH CHECK

N.T.S.

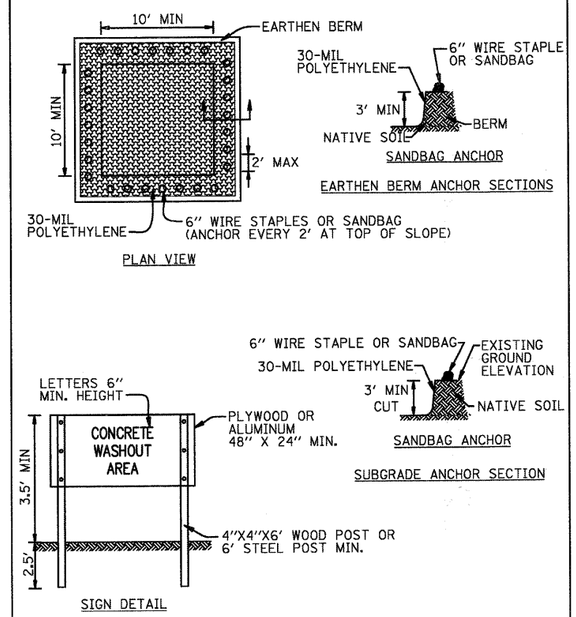

NOTES:

1. MAINTAINING TEMPORARY CONCRETE WASHOUT FACILITIES SHALL INCLUDE REMOVING AND DISPOSING OF HARDENED CONCRETE AND/OR SLURRY AND RETURNING THE FACILITIES TO A FUNCIONAL CONDITION.
2. FACILITY SHALL BE CLEANED OR RECONSTRUCTED IN A NEW AREA ONCE WASHOUT BECOMES TWO-THIRDS FULL.

TEMPORARY CONCRETE WASHOUT FACILITY – EARTHEN TYPE

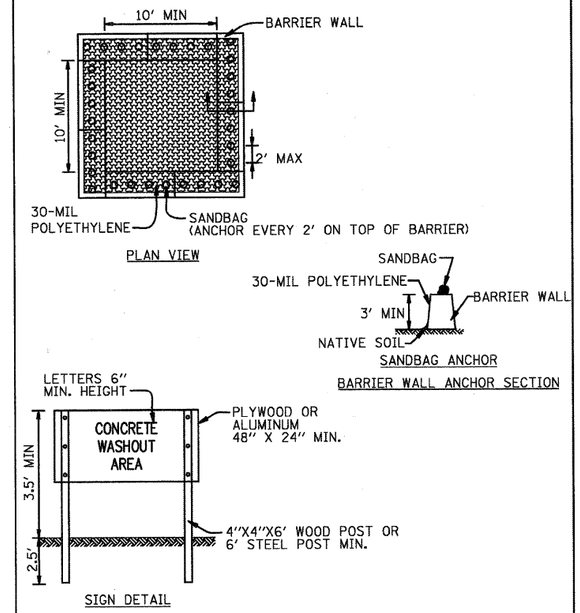

NOTES:

1. MAINTAINING TEMPORARY CONCRETE WASHOUT FACILITIES SHALL INCLUDE REMOVING AND DISPOSING OF HARDENED CONCRETE AND/OR SLURRY AND RETURNING THE FACILITIES TO A FUNCIONAL CONDITION.
2. FACILITY SHALL BE CLEANED OR RECONSTRUCTED IN A NEW AREA ONCE WASHOUT BECOMES TWO-THIRDS FULL.

TEMPORARY CONCRETE WASHOUT FACILITY – BARRIER WALL

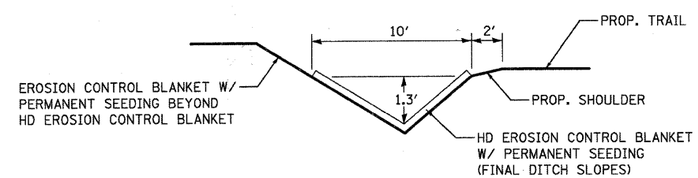

HEAVY DUTY EROSION CONTROL BLANKET

ON ALL DITCHES ≥ 5.0%

FILE NAME = W:\Projects\2011\11031 Steams Rd\Civil\Dgn\Sht\D_SESC_11031_02.dgn

WILLS BURKE KELSEY ASSOCIATES LTD.
116 West Main Street, Suite 201
St. Charles, Illinois 60174

USER NAME = nparris	DESIGNED - PJF	REVISED -	
	DRAWN - NDP	REVISED -	
PLOT SCALE =	CHECKED - PDK	REVISED -	
PLOT DATE = 8/30/2011	DATE - 8/29/11	REVISED -	

STATE OF ILLINOIS
DEPARTMENT OF TRANSPORTATION

MCLEAN BLVD ENVIRONMENTAL ADAPTIVE MANAGEMENT PLANS
SOIL EROSION & SEDIMENT CONTROL DETAILS

SCALE: | SHEET NO. 37 OF 54 SHEETS | STA. | TO STA.

F.A.P. RTE.	SECTION	COUNTY	TOTAL SHEETS	SHEET NO.
361	06-00214-11-LS	KANE	54	37
		CONTRACT NO.63638		
FED. ROAD DIST. NO.	ILLINOIS	FED. AID PROJECT		

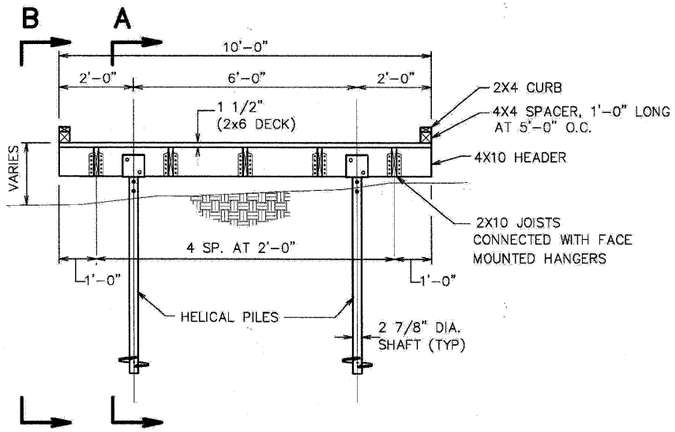

DETAIL – BOARDWALK

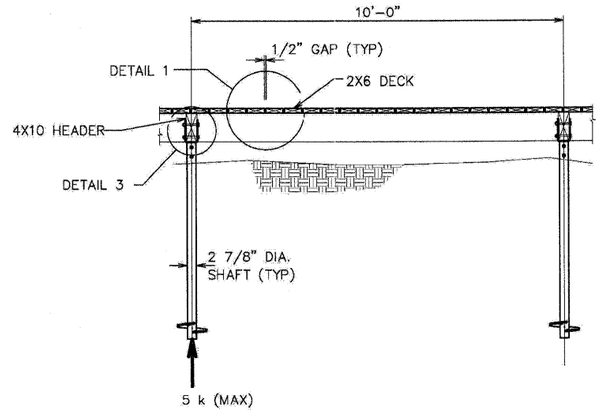

A SECTION – TYPICAL SPAN

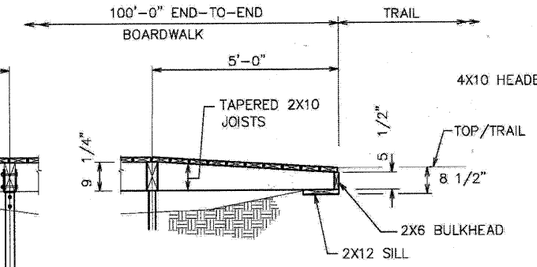

A SECTION – END SPANS

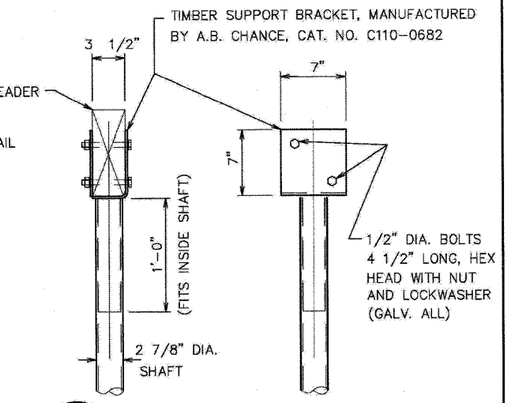

3 DETAIL – BRACKET

BOARDWALK STRUCTURAL NOTES

1. DESIGN LOADS:
   DEAD LOAD = 10 PSF
   LIVE LOAD = 85 PSF

2. TIMBER: PRESSURE TREATED SOUTHERN YELLOW PINE OR DOUGLAS FIR, SELECT STRUCTURAL WITH MINIMUM Fb = 1200 PSI.

   PRESERVATIVE AND TREATMENT PROCESS IN ACCORDANCE WITH AMERICAN WOOD PRESERVERS ASSOCIATION (AWPA). ALL PRESSURE TREATED TIMBER COMPONENTS SHALL BE FREE OF ARESENIC AND SHALL HAVE AN APPROPRIATE ALKALINE COPPER QUATERNARY (ACQ) FORMATION FOR THE SELECTED WOOD MATERIALS WITH MINIMUM RETENTION OF 0.25 LBS/C.F. (ABOVE GROUND) AND 0.40 LBS/C.F. (BELOW GROUND).

   FOR INFORMATION ON JOIST HANGERS, REFER TO CATALOGS PUBLISHED AT WEBSITE http://www.simpsonanchors.com

3. GALVANIZE ALL STEEL.

4. HELICAL PIERS SHALL BE DESIGNED AND INSTALLED TO SUPPORT THE BOARDWALK TO SUPPORT A 5 KIP SERVICE LOAD WITH A MINIMUM FACTOR OF SAFETY OF 2. THE CONTRACTOR SHALL SUBMIT SIGNED SHOP DRAWINGS, DESIGN CALCULATIONS AND INSTALLATION PROCEDURES FROM THE MANUFACTURER, FOR APPROVAL PRIOR TO INSTALLATION.

   FOR INFORMATION ON HELICAL PILES, REFER TO CATALOGS AT WEBSITE http://www.abchance.com

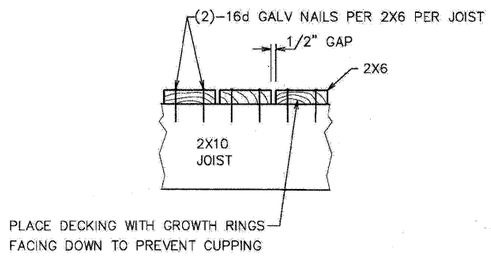

1 DETAIL

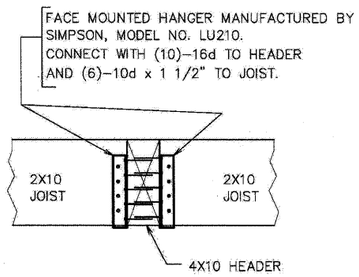

2 DETAIL – HANGERS

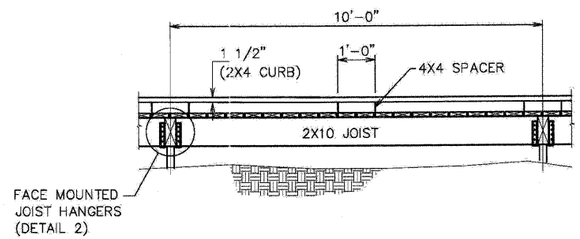

B ELEVATION – SHOWING CURB

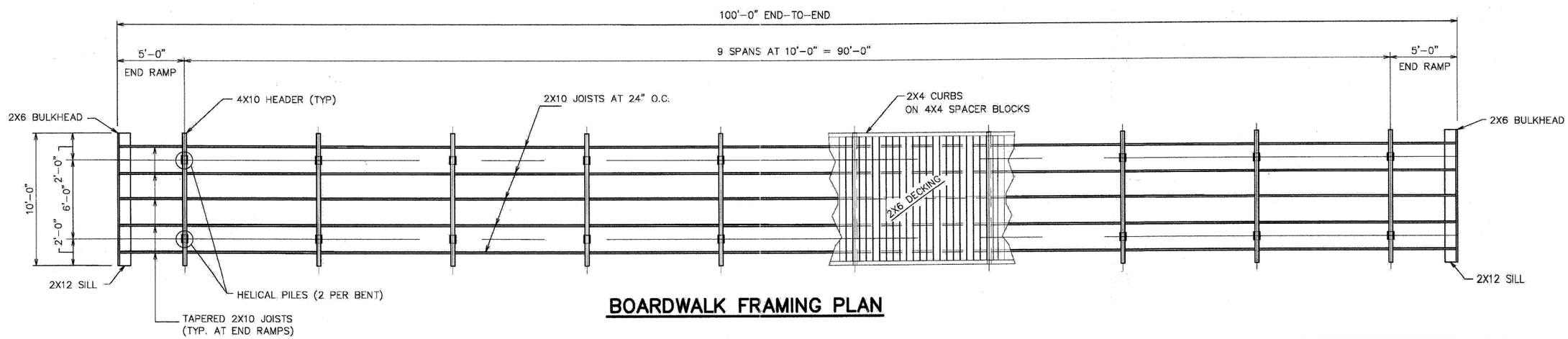

BOARDWALK FRAMING PLAN

FILE NAME = W:\Projects\2011\110131 Steams Rd2A\cad\Civil\Dgn\Sht\BW_110131.dgn

McDonough Associates Inc. Engineers / Architects, 130 East Randolph Street, Chicago, Illinois 60601, (312) 946-8600	USER NAME = nparris	DESIGNED - KJH	REVISED -	STATE OF ILLINOIS DEPARTMENT OF TRANSPORTATION	MCLEAN BLVD ENVIRONMENTAL ADAPTIVE MANAGEMENT PLANS BOARDWALK STRUCTURE DETAILS
		DRAWN -	REVISED -		
	PLOT SCALE =	CHECKED - KJH	REVISED -		
	PLOT DATE = 8/30/2011	DATE - 8/29/11	REVISED -		SCALE: SHEET NO. 38 OF 54 SHEETS STA. TO STA.

F.A.P. RTE.	SECTION	COUNTY	TOTAL SHEETS	SHEET NO.
361	09-00214-11-LS	KANE	54	38
		CONTRACT NO.63638		
FED. ROAD DIST. NO.	ILLINOIS	FED. AID PROJECT		

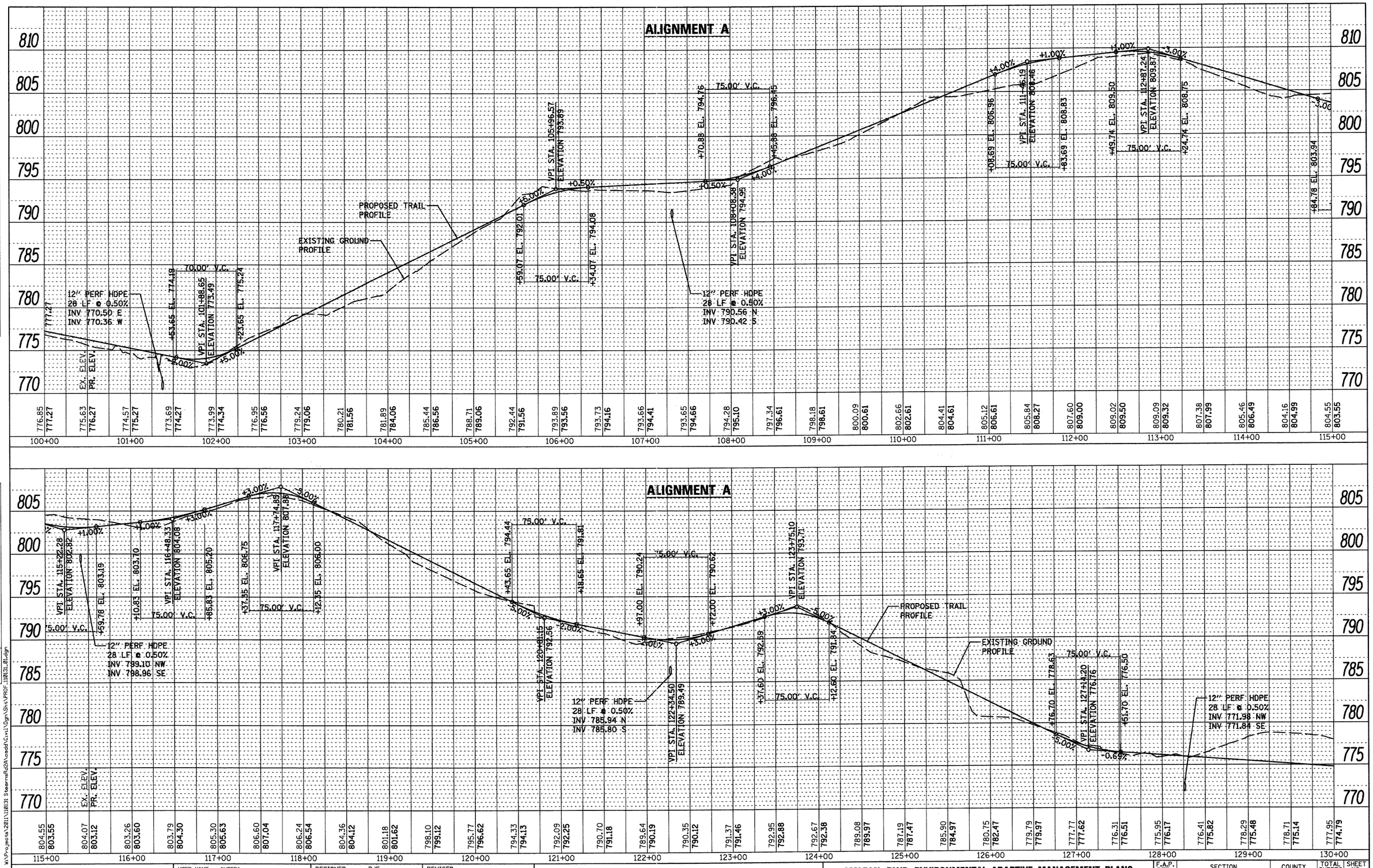

PLAN	BY	DATE
SURVEYED		
PLOTTED		
ALIGNMENT CHECKED		
RT. OF WAY PLOT REQUIRED		
CADD FILE NAME		
NOTE BOOK NO.		

PROFILE	BY	DATE
SURVEYED		
PLOTTED		
GRADES CHECKED		
S.M. NOTES		
STRUCTURE NOTATIONS CHKD		
NOTE BOOK NO.		

FILE NAME = W:\Projects\2011\18131 Steerman\R02A\cadd\Civil\Dgn\Sht\PROF_18131.dgn

WILLS BURKE KELSEY ASSOCIATES LTD.
118 West Main Street, Suite 201
St. Charles, Illinois 60174
(630) 443-7755

USER NAME = $USER$	DESIGNED - PJF	REVISED -	
	DRAWN - NDP	REVISED -	
PLOT SCALE =	CHECKED - PDK	REVISED -	
PLOT DATE = 8/30/2011	DATE - 8/29/11	REVISED -	

STATE OF ILLINOIS
DEPARTMENT OF TRANSPORTATION

MCLEAN BLVD ENVIRONMENTAL ADAPTIVE MANAGEMENT PLANS
PROFILES

SCALE: | SHEET NO. 1 OF 3 SHEETS | STA. PROFILES TO STA.

F.A.P. RTE.	SECTION	COUNTY	TOTAL SHEETS	SHEET NO.
361	06-00214-11-LS	KANE	54	39
		CONTRACT NO.		
FED. ROAD DIST. NO.	ILLINOIS	FED. AID PROJECT		

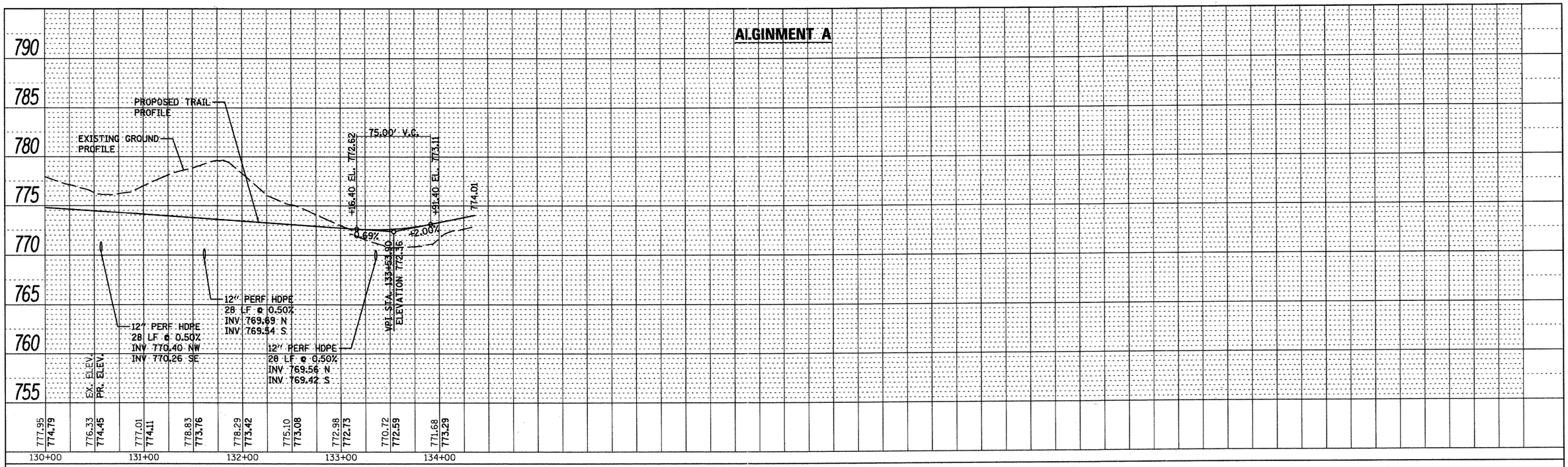

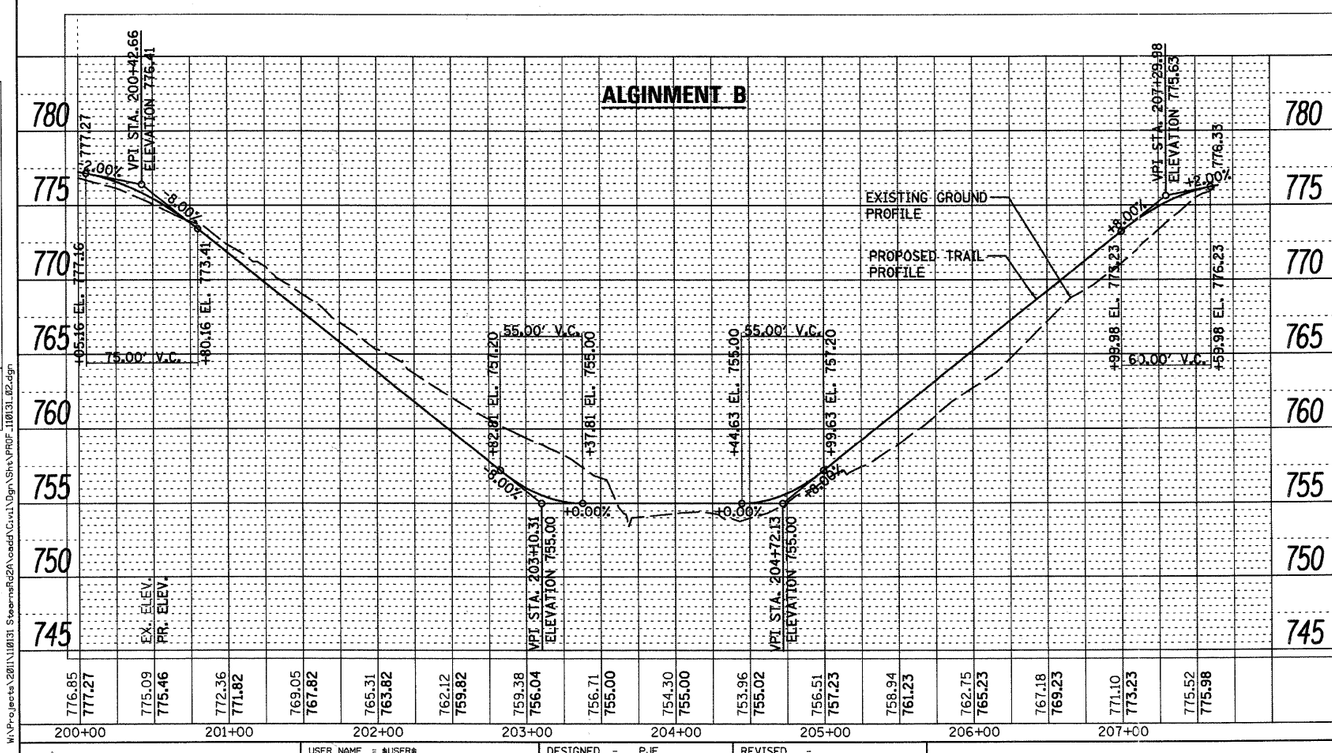

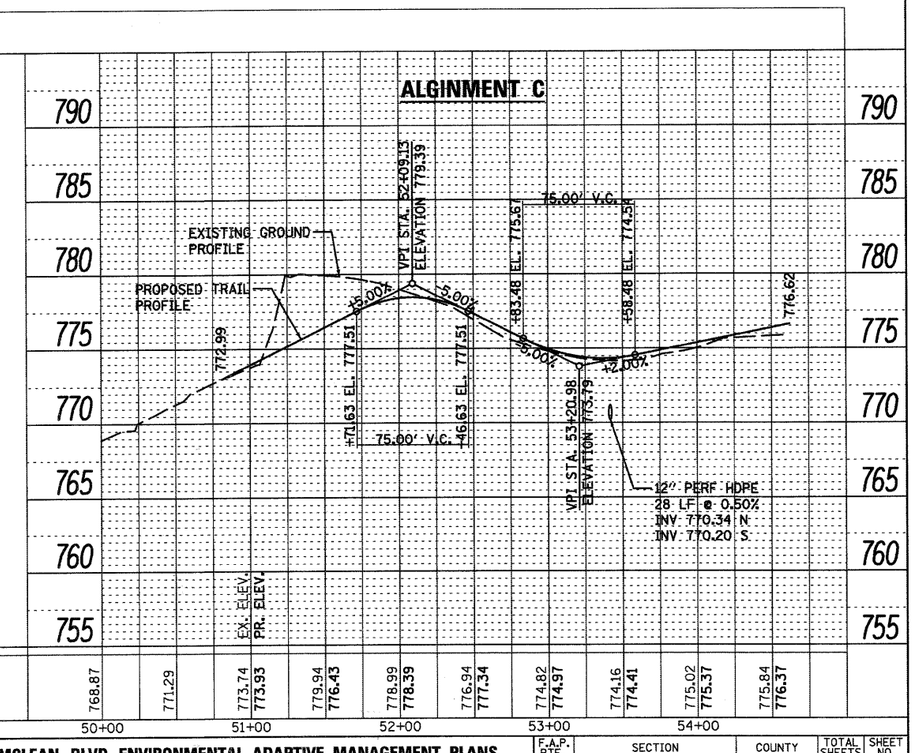

PLAN	SURVEYED	BY	DATE
	PLOTTED		
	ALIGNMENT CHECKED		
NOTE BOOK	GRADES CHECKED		
	R.S.M. NOTED		
NO.	TYPICAL SECTIONS CHECKED		
	CADD FILE NAME		

PROFILE	SURVEYED	BY	DATE
	PLOTTED		
	GRADES CHECKED		
NOTE BOOK	R.S.M. NOTED		
NO.	TYPICAL SECTIONS CHKD		

FILE NAME = W:\Projects\2011\18131 SeanaRd2A\cadd\Civil\Dgn\Sht\PROF_18131_R2.dgn

WILLIS BURKE KELSEY ASSOCIATES LTD.
116 West Main Street, Suite 201
St. Charles, Illinois 60174
(630) 443-7755

USER NAME = $USER$	DESIGNED - PJF	REVISED -	
	DRAWN - NDP	REVISED -	
PLOT SCALE =	CHECKED - PDK	REVISED -	
PLOT DATE = 8/30/2011	DATE - 8/29/11	REVISED -	

STATE OF ILLINOIS
DEPARTMENT OF TRANSPORTATION

MCLEAN BLVD ENVIRONMENTAL ADAPTIVE MANAGEMENT PLANS
PROFILES

SCALE: | SHEET NO. 2 OF 3 SHEETS | STA. PROFILES TO STA.

F.A.P. RTE.	SECTION	COUNTY	TOTAL SHEETS	SHEET NO.
361	06-00214-11-LS	KANE	54	40
		CONTRACT NO.		
FED. ROAD DIST. NO.	ILLINOIS	FED. AID PROJECT		

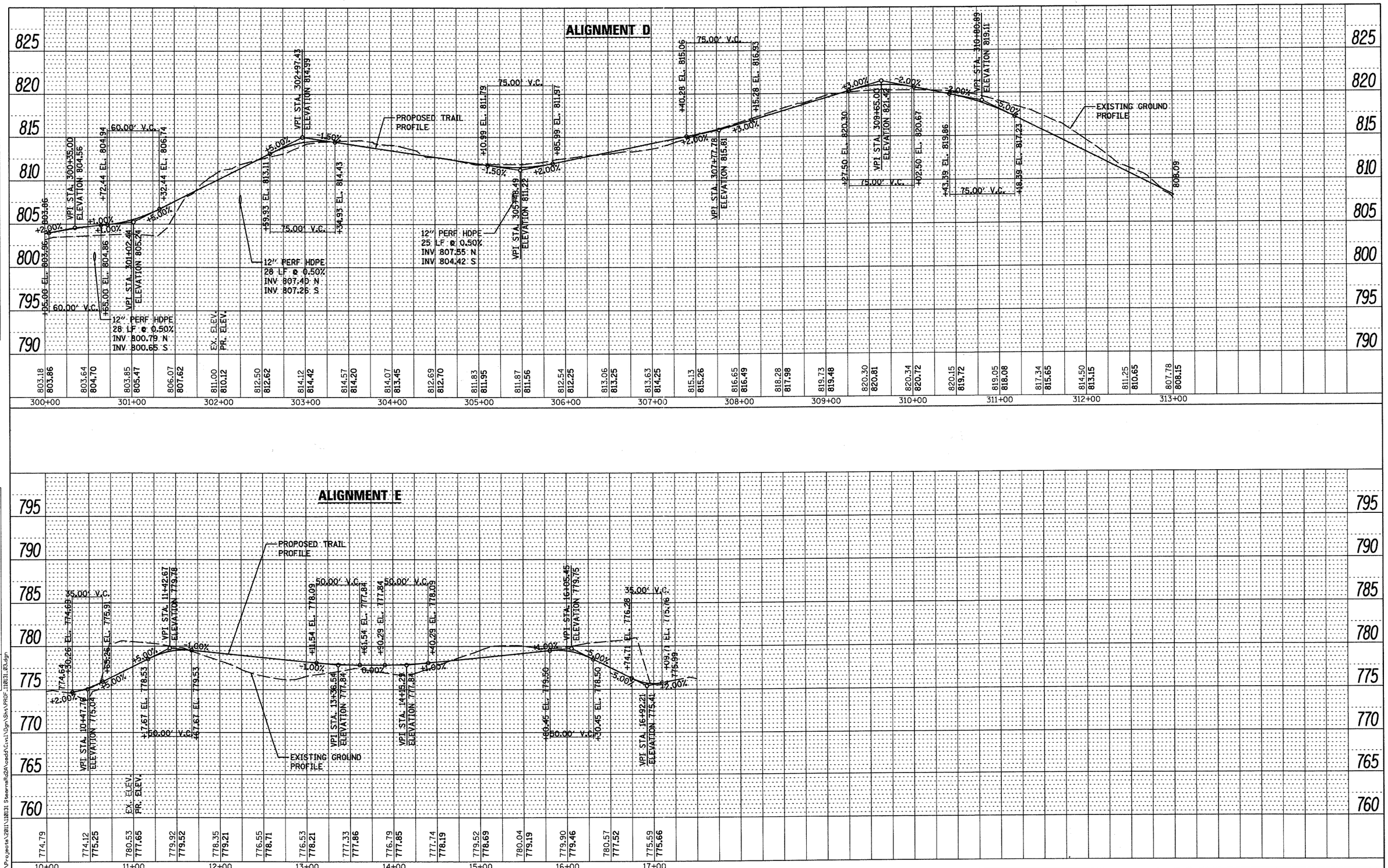

PLAN — SURVEYED / PLOTTED / ALIGNMENT CHECKED / RT. OF WAY CHECKED / CADD FILE NAME — NOTE BOOK NO. — BY — DATE

PROFILE — SURVEYED / PLOTTED / GRADES CHECKED / B.M. NOTED / STRUCTURE NOTAT'NS CHKD — NOTE BOOK NO. — BY — DATE

FILE NAME = W:\Projects\2011\110131 StearnsRd2A\cadd\Civil\Dgn\Sht\PROF_110131_03.dgn

WILLS BURKE KELSEY ASSOCIATES LTD. 116 West Main Street, Suite 201 St. Charles, Illinois 60174 (630) 443-7755	USER NAME = $USER$	DESIGNED - PJF	REVISED -
		DRAWN - NDP	REVISED -
	PLOT SCALE =	CHECKED - PDK	REVISED -
	PLOT DATE = 8/30/2011	DATE - 8/29/11	REVISED -

STATE OF ILLINOIS
DEPARTMENT OF TRANSPORTATION

MCLEAN BLVD ENVIRONMENTAL ADAPTIVE MANAGEMENT PLANS
PROFILES

SCALE: | SHEET NO. 3 OF 3 SHEETS | STA. PROFILES TO STA.

F.A.P. RTE.	SECTION	COUNTY	TOTAL SHEETS	SHEET NO.
361	06-00214-11-LS	KANE	54	41
		CONTRACT NO.		
FED. ROAD DIST. NO.	ILLINOIS	FED. AID PROJECT		

Wang Engineering, INC.
Consulting Geotechnical and Environmental Engineers
wangeng3@wangeng.com
1145 Main Street
Lombard, IL 60148
Telephone: 630 953-9928
Fax: 630 953-9938

BORING LOG MW-1A

WEI Job No.: 201-33-01

Client: McDonough Associates, Inc.
Project: McLean Blvd / New Stearns Rd
Location: Sec. 3, T 40 N, R 8 E of Geneva Quadrangle

Datum: NAVD
Elevation: 829.17 ft
North: 1937240.48 ft
East: 987297.51 ft
Station:
Offset:

Page 1 of 2

Elevation (ft)	SOIL AND ROCK DESCRIPTION	Depth (ft)
	12-inch thick TOPSOIL	
829.2	Brown CLAY	
824.2	Brown and gray GRAVEL	5
817.2	Brown GRAVELLY SAND	
814.2	Brown and gray SANDY LOAM	15
812.2	Brown GRAVEL	10
		20

GENERAL NOTES

Begin Drilling: 07-23-2008 Complete Drilling: 07-23-2008
Drilling Contractor: WTS Drill Rig: D-120 ATV
Driller: K & J Logger: F.B. Checked by: N. Davis
Drilling Method: 4.25" IDA HSA

WATER LEVEL DATA

While Drilling: ▽
At Completion of Drilling: ▼
Time After Drilling: NA
Depth to Water: ▼ NA

The stratification lines represent the approximate boundary between soil types; the actual transition may be gradual.

BORING LOG MW-1A

WEI Job No.: 201-33-01

Client: McDonough Associates, Inc.
Project: McLean Blvd / New Stearns Rd
Location: Sec. 3, T 40 N, R 8 E of Geneva Quadrangle

Datum: NAVD
Elevation: 829.17 ft
North: 1937240.48 ft
East: 987297.51 ft
Station:
Offset:

Page 2 of 2

Elevation (ft)	SOIL AND ROCK DESCRIPTION	Depth (ft)
809.2	Gray CLAY	
804.2	Boring terminated at 23.00 ft	
	BOTTOM OF MONITORING WELL INSTALLED AT 23 FEET	25
		30

GENERAL NOTES

Begin Drilling: 07-23-2008 Complete Drilling: 07-23-2008
Drilling Contractor: WTS Drill Rig: D-120 ATV
Driller: K & J Logger: F.B. Checked by: N. Davis
Drilling Method: 4.25" IDA HSA

WATER LEVEL DATA

While Drilling: ▽
At Completion of Drilling: ▼
Time After Drilling: NA
Depth to Water: ▼ NA

The stratification lines represent the approximate boundary between soil types; the actual transition may be gradual.

BORING LOG MW-1B

WEI Job No.: 201-33-01

Client: McDonough Associates, Inc.
Project: McLean Blvd / New Stearns Rd
Location: Sec. 3, T 40 N, R 8 E of Geneva Quadrangle

Datum: NAVD
Elevation: 827.30 ft
North: 1937242.70 ft
East: 987216.47 ft
Station:
Offset:

Page 1 of 1

Elevation (ft)	SOIL AND ROCK DESCRIPTION	Depth (ft)
	12-inch thick TOPSOIL	
826.3	Brown CLAY	
824.3	Brown GRAVEL	5
812.3	Boring terminated at 15.00 ft	15
	BOTTOM OF MONITORING WELL INSTALLED AT 12.5 FEET	20

GENERAL NOTES

Begin Drilling: 07-23-2008 Complete Drilling: 07-23-2008
Drilling Contractor: WTS Drill Rig: D-120 ATV
Driller: K & J Logger: F.B. Checked by: N. Davis
Drilling Method: 4.25" IDA HSA

WATER LEVEL DATA

While Drilling: ▽
At Completion of Drilling: ▼
Time After Drilling: NA
Depth to Water: ▼ NA

The stratification lines represent the approximate boundary between soil types; the actual transition may be gradual.

BORING LOG MW-2A

WEI Job No.: 201-33-01

Client: McDonough Associates, Inc.
Project: McLean Blvd / New Stearns Rd
Location: Sec. 3, T 40 N, R 8 E of Geneva Quadrangle

Datum: NAVD
Elevation: 817.66 ft
North: 1937238.09 ft
East: 987511.13 ft
Station:
Offset:

Page 1 of 3

Elevation (ft)	SOIL AND ROCK DESCRIPTION	Depth (ft)
	12-inch thick TOPSOIL	
816.7	Brown CLAY	
814.7	Brown GRAVEL	5
807.7		10
	Brown GRAVELLY SAND	
804.7	Brown SANDY LOAM	15
802.7	Brown GRAVEL	20

GENERAL NOTES

Begin Drilling: 07-24-2008 Complete Drilling: 07-24-2008
Drilling Contractor: WTS Drill Rig: D-120 ATV
Driller: K & J Logger: F.B. Checked by: N. Davis
Drilling Method: 4.25" IDA HSA

WATER LEVEL DATA

While Drilling: ▽
At Completion of Drilling: ▼
Time After Drilling: NA
Depth to Water: ▼ NA

The stratification lines represent the approximate boundary between soil types; the actual transition may be gradual.

BORING LOG MW-2A

WEI Job No.: 201-33-01

Client: McDonough Associates, Inc.
Project: McLean Blvd / New Stearns Rd
Location: Sec. 3, T 40 N, R 8 E of Geneva Quadrangle

Datum: NAVD
Elevation: 817.66 ft
North: 1937238.09 ft
East: 987511.13 ft
Station:
Offset:

Page 2 of 3

Elevation (ft)	SOIL AND ROCK DESCRIPTION	Depth (ft)
794.7	Gray CLAY	
787.7	Boring terminated at 24.00 ft	
	BOTTOM OF MONITORING WELL INSTALLED AT 23.2 FEET	25
		30

GENERAL NOTES

Begin Drilling: 07-24-2008 Complete Drilling: 07-24-2008
Drilling Contractor: WTS Drill Rig: D-120 ATV
Driller: K & J Logger: F.B. Checked by: N. Davis
Drilling Method: 4.25" IDA HSA

WATER LEVEL DATA

While Drilling: ▽
At Completion of Drilling: ▼
Time After Drilling: NA
Depth to Water: ▼ NA

The stratification lines represent the approximate boundary between soil types; the actual transition may be gradual.

BORING LOG MW-2B

WEI Job No.: 201-33-01

Client: McDonough Associates, Inc.
Project: McLean Blvd / New Stearns Rd
Location: Sec. 3, T 40 N, R 8 E of Geneva Quadrangle

Datum: NAVD
Elevation: 817.62 ft
North: 1937236.54 ft
East: 987517.87 ft
Station:
Offset:

Page 1 of 1

Elevation (ft)	SOIL AND ROCK DESCRIPTION	Depth (ft)
	12-inch thick TOPSOIL	
816.5	Brown CLAY	
814.5	Brown GRAVEL	5
807.5		10
	Brown GRAVELLY SAND	
803.5	Boring terminated at 14.00 ft	15
	BOTTOM OF MONITORING WELL INSTALLED AT 13.5 FEET	20

GENERAL NOTES

Begin Drilling: 07-24-2008 Complete Drilling: 07-24-2008
Drilling Contractor: WTS Drill Rig: D-120 ATV
Driller: K & J Logger: F.B. Checked by: N. Davis
Drilling Method: 4.25" IDA HSA

WATER LEVEL DATA

While Drilling: ▽
At Completion of Drilling: ▼
Time After Drilling: NA
Depth to Water: ▼ NA

The stratification lines represent the approximate boundary between soil types; the actual transition may be gradual.

BORING LOG NOTES

A SOILS INVESTIGATION WAS NOT COMPLETED SPECIFICALLY FOR THIS PROJECT. HOWEVER, THERE WAS AN OVERALL GEOTECHNICAL REPORT COMPLETED FOR THE STEARNS ROAD STAGE 2 PROJECT (06-00214-10-BR) WHICH INCLUDED 12-14 MONITORING WELL BORINGS THAT FALL WITHIN THE LIMIT OF THIS PROJECT. INFORMATION CONTAINED IN THESE BORINGS WAS USED IN PREPARATION OF THE EARTHWORK AND RELATED QUANTITY CALCULATIONS. THE BORINGS HAVE BEEN INCLUDED IN THE PLANS FOR REFERENCE PURPOSES ONLY.

BECAUSE THE BORING WERE PART OF ANOTHER PROJECT THESE BORING ARE FOR REFERENCE ONLY AND DO NOT RELIEVE THE CONTRACTOR OF HIS RESPONSIBILTY TO DO HIS OWN SITE INVESTIGATION TO SATIFY HIMSELF OF THE EXISITNG SITE CONDITIONS.

BORING LOG MW-3A

Page 1 of 2

Wang Engineering, INC. Consulting Geotechnical and Environmental Engineers
wangeng3@wangeng.com
1145 Main Street
Lombard, IL 60148
Telephone: 630 953-9928
Fax: 630 953-9938

WEI Job No.: 201-33-01
Client: McDonough Associates, Inc.
Project: McLean Blvd / New Stearns Rd
Location: Sec. 3, T 40 N, R 8 E of Geneva Quadrangle

Datum: NAVD
Elevation: 822.05 ft
North: 1936742.16 ft
East: 987126.25 ft
Station:
Offset:

Elevation (ft)	SOIL AND ROCK DESCRIPTION	Depth (ft)
	12-inch thick TOPSOIL	
821.9	Brown CLAY	
818.5	Brown GRAVEL	5
815.0	Brown SANDY LOAM	10
808.6	Brown GRAVELLY SAND	15
		20

Sample Type, Sample No., SPT Values (blw/6 in), Qu (tsf), Moisture Content (%)

GENERAL NOTES

Begin Drilling 07-24-2008 Complete Drilling 07-24-2008
Drilling Contractor WTS Drill Rig D-120 ATV
Driller K & J Logger F.B. Checked by N. Davis
Drilling Method 4.25" IDA HSA

WATER LEVEL DATA

While Drilling
At Completion of Drilling
Time After Drilling NA
Depth to Water NA

The stratification lines represent the approximate boundary between soil types; the actual transition may be gradual.

BORING LOG MW-3A

Page 2 of 2

Wang Engineering, INC. Consulting Geotechnical and Environmental Engineers
wangeng3@wangeng.com
1145 Main Street
Lombard, IL 60148
Telephone: 630 953-9928
Fax: 630 953-9938

WEI Job No.: 201-33-01
Client: McDonough Associates, Inc.
Project: McLean Blvd / New Stearns Rd
Location: Sec. 3, T 40 N, R 8 E of Geneva Quadrangle

Datum: NAVD
Elevation: 822.05 ft
North: 1936742.16 ft
East: 987126.25 ft
Station:
Offset:

Elevation (ft)	SOIL AND ROCK DESCRIPTION	Depth (ft)
811.0	Brown SANDY CLAY	
799.0	Boring terminated at 23.00 ft.	
	BOTTOM OF MONITORING WELL INSTALLED AT 23 FEET	25
		30

Sample Type, Sample No., SPT Values (blw/6 in), Qu (tsf), Moisture Content (%)

GENERAL NOTES

Begin Drilling 07-24-2008 Complete Drilling 07-24-2008
Drilling Contractor WTS Drill Rig D-120 ATV
Driller K & J Logger F.B. Checked by N. Davis
Drilling Method 4.25" IDA HSA

WATER LEVEL DATA

While Drilling
At Completion of Drilling
Time After Drilling NA
Depth to Water NA

The stratification lines represent the approximate boundary between soil types; the actual transition may be gradual.

BORING LOG MW-3B

Page 1 of 1

Wang Engineering, INC. Consulting Geotechnical and Environmental Engineers
wangeng3@wangeng.com
1145 Main Street
Lombard, IL 60148
Telephone: 630 953-9928
Fax: 630 953-9938

WEI Job No.: 201-33-01
Client: McDonough Associates, Inc.
Project: McLean Blvd / New Stearns Rd
Location: Sec. 3, T 40 N, R 8 E of Geneva Quadrangle

Datum: NAVD
Elevation: 823.70 ft
North: 1936748.14 ft
East: 987121.91 ft
Station:
Offset:

Elevation (ft)	SOIL AND ROCK DESCRIPTION	Depth (ft)
	12-inch thick TOPSOIL	
820.7	Brown CLAY	
819.7	Brown GRAVEL	5
814.7	Brown SILTY SAND	10
803.7	Boring terminated at 10.00 ft BOTTOM OF MONITORING WELL INSTALLED AT 9.5 FEET	15 20

Sample Type, Sample No., SPT Values (blw/6 in), Qu (tsf), Moisture Content (%)

GENERAL NOTES

Begin Drilling 07-24-2008 Complete Drilling 07-24-2008
Drilling Contractor WTS Drill Rig D-120 ATV
Driller K & J Logger F.B. Checked by N. Davis
Drilling Method 4.25" IDA HSA

WATER LEVEL DATA

While Drilling
At Completion of Drilling
Time After Drilling NA
Depth to Water NA

The stratification lines represent the approximate boundary between soil types; the actual transition may be gradual.

BORING LOG MW-4A

Page 1 of 3

Wang Engineering, INC. Consulting Geotechnical and Environmental Engineers
wangeng3@wangeng.com
1145 Main Street
Lombard, IL 60148
Telephone: 630 953-9928
Fax: 630 953-9938

WEI Job No.: 201-33-01
Client: McDonough Associates, Inc.
Project: McLean Blvd / New Stearns Rd
Location: Sec. 3, T 40 N, R 8 E of Geneva Quadrangle

Datum: NAVD
Elevation: 816.07 ft
North: 1936743.39 ft
East: 987585.40 ft
Station:
Offset:

Elevation (ft)	SOIL AND ROCK DESCRIPTION	Depth (ft)
	Brown TOPSOIL	
815.1	Brown CLAY	
813.1	Brown GRAVELLY SAND, with GRAVEL interbeds	5
		10
		15
		20

Sample Type, Sample No., SPT Values (blw/6 in), Qu (tsf), Moisture Content (%)

GENERAL NOTES

Begin Drilling 07-21-2008 Complete Drilling 07-22-2008
Drilling Contractor WTS Drill Rig D-120 ATV
Driller K & J Logger F.B. Checked by N. Davis
Drilling Method 4.25" IDA HSA

WATER LEVEL DATA

While Drilling
At Completion of Drilling
Time After Drilling NA
Depth to Water NA

The stratification lines represent the approximate boundary between soil types; the actual transition may be gradual.

BORING LOG MW-4A

Page 2 of 3

Wang Engineering, INC. Consulting Geotechnical and Environmental Engineers
wangeng3@wangeng.com
1145 Main Street
Lombard, IL 60148
Telephone: 630 953-9928
Fax: 630 953-9938

WEI Job No.: 201-33-01
Client: McDonough Associates, Inc.
Project: McLean Blvd / New Stearns Rd
Location: Sec. 3, T 40 N, R 8 E of Geneva Quadrangle

Datum: NAVD
Elevation: 816.07 ft
North: 1936743.39 ft
East: 987585.40 ft
Station:
Offset:

Elevation (ft)	SOIL AND ROCK DESCRIPTION	Depth (ft)
		25
	BOTTOM OF MONITORING WELL INSTALLED AT 33.4 FEET	30 35
		40

Sample Type, Sample No., SPT Values (blw/6 in), Qu (tsf), Moisture Content (%)

GENERAL NOTES

Begin Drilling 07-21-2008 Complete Drilling 07-22-2008
Drilling Contractor WTS Drill Rig D-120 ATV
Driller K & J Logger F.B. Checked by N. Davis
Drilling Method 4.25" IDA HSA

WATER LEVEL DATA

While Drilling
At Completion of Drilling
Time After Drilling NA
Depth to Water NA

The stratification lines represent the approximate boundary between soil types; the actual transition may be gradual.

BORING LOG MW-4A

Page 3 of 3

Wang Engineering, INC. Consulting Geotechnical and Environmental Engineers
wangeng3@wangeng.com
1145 Main Street
Lombard, IL 60148
Telephone: 630 953-9928
Fax: 630 953-9938

WEI Job No.: 201-33-01
Client: McDonough Associates, Inc.
Project: McLean Blvd / New Stearns Rd
Location: Sec. 3, T 40 N, R 8 E of Geneva Quadrangle

Datum: NAVD
Elevation: 816.07 ft
North: 1936743.39 ft
East: 987585.40 ft
Station:
Offset:

Elevation (ft)	SOIL AND ROCK DESCRIPTION	Depth (ft)
771.1	Boring terminated at 45.00 ft	45
		50

Sample Type, Sample No., SPT Values (blw/6 in), Qu (tsf), Moisture Content (%)

GENERAL NOTES

Begin Drilling 07-21-2008 Complete Drilling 07-22-2008
Drilling Contractor WTS Drill Rig D-120 ATV
Driller K & J Logger F.B. Checked by N. Davis
Drilling Method 4.25" IDA HSA

WATER LEVEL DATA

While Drilling
At Completion of Drilling
Time After Drilling NA
Depth to Water NA

The stratification lines represent the approximate boundary between soil types; the actual transition may be gradual.

BORING LOG MW-4B

Page 1 of 1

Wang Engineering, INC. Consulting Geotechnical and Environmental Engineers
wangeng3@wangeng.com
1145 Main Street
Lombard, IL 60148
Telephone: 630 953-9928
Fax: 630 953-9938

WEI Job No.: 201-33-01
Client: McDonough Associates, Inc.
Project: McLean Blvd / New Stearns Rd
Location: Sec. 3, T 40 N, R 8 E of Geneva Quadrangle

Datum: NAVD
Elevation: 815.71 ft
North: 1936738.77 ft
East: 987586.51 ft
Station:
Offset:

Elevation (ft)	SOIL AND ROCK DESCRIPTION	Depth (ft)
	Brown TOPSOIL	
814.7	Brown SANDY CLAY	
812.7	Brown GRAVELLY SAND	5
800.7	Boring terminated at 15.00 ft BOTTOM OF MONITORING WELL INSTALLED AT 12.5 FEET	10 15 20

Sample Type, Sample No., SPT Values (blw/6 in), Qu (tsf), Moisture Content (%)

GENERAL NOTES

Begin Drilling 07-22-2008 Complete Drilling 07-22-2008
Drilling Contractor WTS Drill Rig D-120 ATV
Driller K & J Logger F.B. Checked by N. Davis
Drilling Method 4.25" IDA HSA

WATER LEVEL DATA

While Drilling
At Completion of Drilling
Time After Drilling NA
Depth to Water NA

The stratification lines represent the approximate boundary between soil types; the actual transition may be gradual.

FILE NAME = W:\Projects\2011\11013 Stearns Rd2A\cadd\Civil\Dgn\Site\SB_110131_R2.dgn

WBK WILLS BURKE KELSEY ASSOCIATES LTD.
116 West Main Street, Suite 201
St. Charles, Illinois 60174

USER NAME = nparris	DESIGNED -	REVISED -	
	DRAWN -	REVISED -	
PLOT SCALE =	CHECKED -	REVISED -	
PLOT DATE = 8/30/2011	DATE - 8/29/11	REVISED -	

STATE OF ILLINOIS
DEPARTMENT OF TRANSPORTATION

SOIL BORING LOGS
FOR REFERENCE ONLY

SCALE: | SHEET NO. 43 OF 54 SHEETS | STA. | TO STA.

F.A.P. RTE.	SECTION	COUNTY	TOTAL SHEETS	SHEET NO.
361	09-00214-11-LS	KANE	54	43
		CONTRACT NO.63638		
FED. ROAD DIST. NO.	ILLINOIS	FED. AID PROJECT		

Wang Engineering, INC.
Consulting Geotechnical and Environmental Engineers
wangeng3@wangeng.com
1145 Main Street
Lombard, IL 60148
Telephone: 630 953-9928
Fax: 630 953-9938

BORING LOG MW-5

WEI Job No.: 201-33-01

Client: McDonough Associates, Inc.
Project: McLean Blvd / New Stearns Rd
Location: Sec. 3, T 40 N, R 8 E of Geneva Quadrangle

Datum: NAVD
Elevation: 802.83 ft
North: 1936003.17 ft
East: 987104.06 ft
Station:
Offset:

Elevation (ft)	SOIL AND ROCK DESCRIPTION	Depth (ft)
	24-inch thick TOPSOIL	
799.8	Brown CLAY LOAM	
795.8	Brown SANDY CLAY	
790.8	Brown SANDY LOAM	

Sample Type | Sample No. | SPT Values (blows/6 in) | Qu (tsf) | Moisture Content (%)

GENERAL NOTES

Begin Drilling: 07-23-2008 Complete Drilling: 07-23-2008
Drilling Contractor: WTS Drill Rig: D-120 ATV
Driller: K & J Logger: F.B. Checked by: N. Davis
Drilling Method: 4.25" IDA HSA

WATER LEVEL DATA

While Drilling: ▽
At Completion of Drilling: ▼
Time After Drilling: NA
Depth to Water: ▼ NA

The stratification lines represent the approximate boundary between soil types; the actual transition may be gradual.

Wang Engineering, INC.
Consulting Geotechnical and Environmental Engineers
wangeng3@wangeng.com
1145 Main Street
Lombard, IL 60148
Telephone: 630 953-9928
Fax: 630 953-9938

BORING LOG MW-5

WEI Job No.: 201-33-01

Client: McDonough Associates, Inc.
Project: McLean Blvd / New Stearns Rd
Location: Sec. 3, T 40 N, R 8 E of Geneva Quadrangle

Datum: NAVD
Elevation: 802.83 ft
North: 1936003.17 ft
East: 987104.06 ft
Station:
Offset:

Elevation (ft)	SOIL AND ROCK DESCRIPTION	Depth (ft)
772.8	Boring terminated at 30.00 ft BOTTOM OF MONITORING WELL INSTALLED AT 29.2 FEET	30

Sample Type | Sample No. | SPT Values (blows/6 in) | Qu (tsf) | Moisture Content (%)

GENERAL NOTES

Begin Drilling: 07-23-2008 Complete Drilling: 07-23-2008
Drilling Contractor: WTS Drill Rig: D-120 ATV
Driller: K & J Logger: F.B. Checked by: N. Davis
Drilling Method: 4.25" IDA HSA

WATER LEVEL DATA

While Drilling: ▽
At Completion of Drilling: ▼
Time After Drilling: NA
Depth to Water: ▼ NA

The stratification lines represent the approximate boundary between soil types; the actual transition may be gradual.

Wang Engineering, INC.
Consulting Geotechnical and Environmental Engineers
wangeng3@wangeng.com
1145 Main Street
Lombard, IL 60148
Telephone: 630 953-9928
Fax: 630 953-9938

BORING LOG MW-6A

WEI Job No.: 201-33-01

Client: McDonough Associates, Inc.
Project: McLean Blvd / New Stearns Rd
Location: Sec. 3, T 40 N, R 8 E of Geneva Quadrangle

Datum: NAVD
Elevation: 799.94 ft
North: 1936001.34 ft
East: 987651.37 ft
Station:
Offset:

Elevation (ft)	SOIL AND ROCK DESCRIPTION	Depth (ft)
	12-inch thick TOPSOIL	
799.9	Brown gray SILTY CLAY	
797.9	Brown and gray CLAY	
791.9	Brown SANDY LOAM	
791.9	Brown GRAVELLY SAND	

Sample Type | Sample No. | SPT Values (blows/6 in) | Qu (tsf) | Moisture Content (%)

GENERAL NOTES

Begin Drilling: 07-22-2008 Complete Drilling: 07-22-2008
Drilling Contractor: WTS Drill Rig: D-120 ATV
Driller: K & J Logger: F.B. Checked by: N. Davis
Drilling Method: 4.25" IDA HSA

WATER LEVEL DATA

While Drilling: ▽
At Completion of Drilling: ▼
Time After Drilling: NA
Depth to Water: ▼ NA

The stratification lines represent the approximate boundary between soil types; the actual transition may be gradual.

Wang Engineering, INC.
Consulting Geotechnical and Environmental Engineers
wangeng3@wangeng.com
1145 Main Street
Lombard, IL 60148
Telephone: 630 953-9928
Fax: 630 953-9938

BORING LOG MW-6A

WEI Job No.: 201-33-01

Client: McDonough Associates, Inc.
Project: McLean Blvd / New Stearns Rd
Location: Sec. 3, T 40 N, R 8 E of Geneva Quadrangle

Datum: NAVD
Elevation: 799.94 ft
North: 1936001.34 ft
East: 987651.37 ft
Station:
Offset:

Elevation (ft)	SOIL AND ROCK DESCRIPTION	Depth (ft)
776.9	Boring terminated at 23.00 ft BOTTOM OF MONITORING WELL INSTALLED AT 22.8 FEET	30

Sample Type | Sample No. | SPT Values (blows/6 in) | Qu (tsf) | Moisture Content (%)

GENERAL NOTES

Begin Drilling: 07-22-2008 Complete Drilling: 07-22-2008
Drilling Contractor: WTS Drill Rig: D-120 ATV
Driller: K & J Logger: F.B. Checked by: N. Davis
Drilling Method: 4.25" IDA HSA

WATER LEVEL DATA

While Drilling: ▽
At Completion of Drilling: ▼
Time After Drilling: NA
Depth to Water: ▼ NA

The stratification lines represent the approximate boundary between soil types; the actual transition may be gradual.

Wang Engineering, INC.
Consulting Geotechnical and Environmental Engineers
wangeng3@wangeng.com
1145 Main Street
Lombard, IL 60148
Telephone: 630 953-9928
Fax: 630 953-9938

BORING LOG MW-6B

WEI Job No.: 201-33-01

Client: McDonough Associates, Inc.
Project: McLean Blvd / New Stearns Rd
Location: Sec. 3, T 40 N, R 8 E of Geneva Quadrangle

Datum: NAVD
Elevation: 800.07 ft
North: 1935996.30 ft
East: 987645.16 ft
Station:
Offset:

Elevation (ft)	SOIL AND ROCK DESCRIPTION	Depth (ft)
	12-inch thick TOPSOIL	
799.1	Brown and gray SILTY CLAY	
798.1	Brown CLAY	
787.1	Boring terminated at 13.00 ft BOTTOM OF MONITORING WELL INSTALLED AT 12.3 FEET	
790.1	Brown SANDY LOAM	

Sample Type | Sample No. | SPT Values (blows/6 in) | Qu (tsf) | Moisture Content (%)

GENERAL NOTES

Begin Drilling: 07-22-2008 Complete Drilling: 07-22-2008
Drilling Contractor: WTS Drill Rig: D-120 ATV
Driller: K & J Logger: F.B. Checked by: N. Davis
Drilling Method: 4.25" IDA HSA

WATER LEVEL DATA

While Drilling: ▽
At Completion of Drilling: ▼
Time After Drilling: NA
Depth to Water: ▼ NA

The stratification lines represent the approximate boundary between soil types; the actual transition may be gradual.

FILE NAME = W:\Projects\2011\11031 StearnsRd2A\cadd\Civil\Dgn\Sht\SB.11031.03.dgn

WILLS BURKE KELSEY ASSOCIATES LTD.
116 West Main Street, Suite 201
St. Charles, Illinois 60174

USER NAME = nparris	DESIGNED -	REVISED -
	DRAWN -	REVISED -
PLOT SCALE =	CHECKED -	REVISED -
PLOT DATE = 8/30/2011	DATE - 8/29/11	REVISED -

STATE OF ILLINOIS
DEPARTMENT OF TRANSPORTATION

SOIL BORING LOGS
FOR REFERENCE ONLY

SCALE: | SHEET NO. 44 OF 54 SHEETS | STA. | TO STA.

F.A.P. RTE.	SECTION	COUNTY	TOTAL SHEETS	SHEET NO.
361	06-00214-11-LS	KANE	54	44
		CONTRACT NO.63638		
FED. ROAD DIST. NO.	ILLINOIS	FED. AID PROJECT		

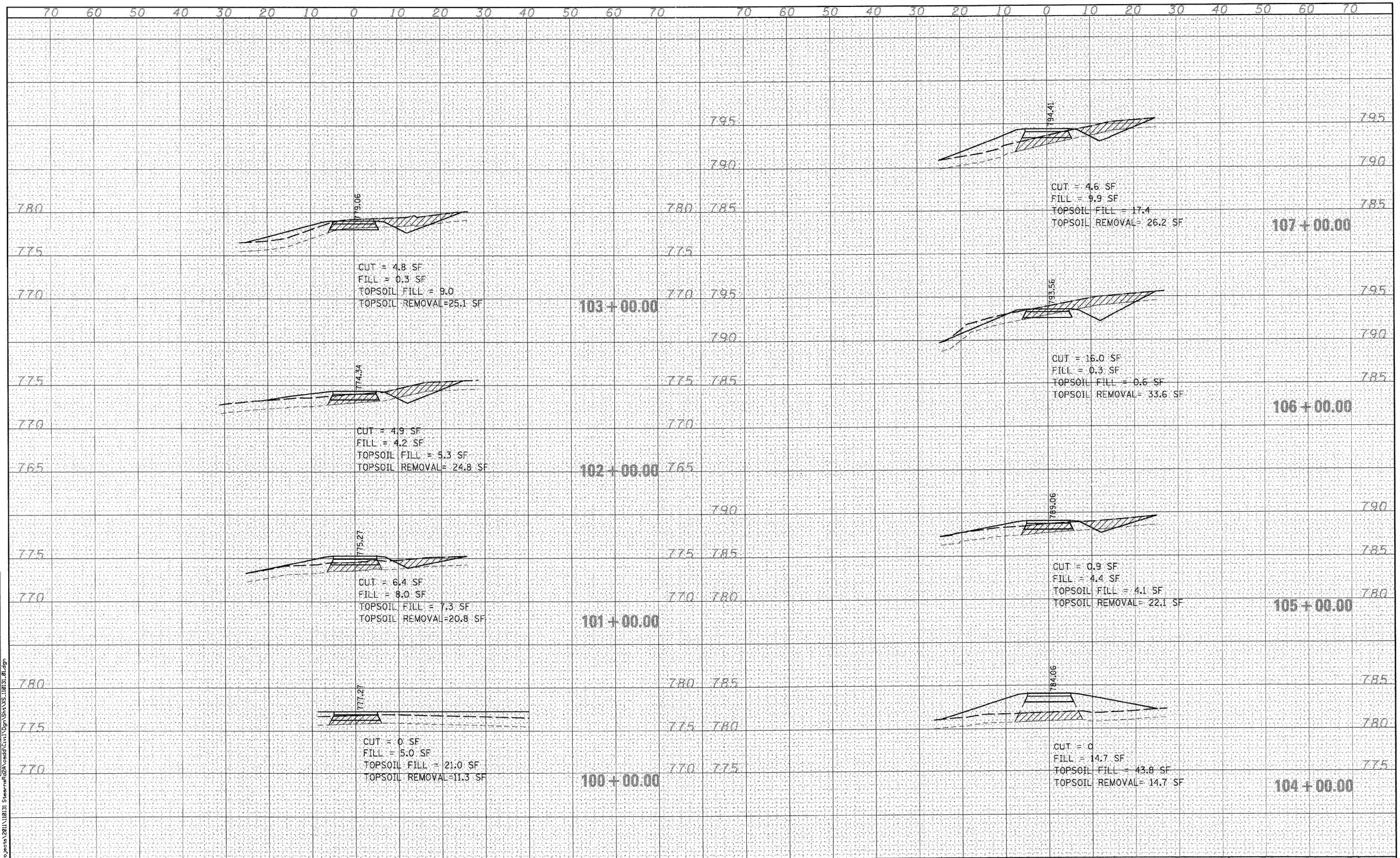

FINAL SURVEY | NOTE BOOK NO. | SURVEYED | PLOTTED | TEMPLATE | AREAS | AREAS CHECKED | BY | DATE

ORIGINAL SURVEY | NOTE BOOK NO. | SURVEYED | PLOTTED | TEMPLATE | AREAS | AREAS CHECKED | BY | DATE

FILE NAME = W:\Projects\2011\110131 Stearns\Rd2A\cadd\Civil\Dgn\Sht\XS_110131_01.dgn

McDonough Associates Inc.
Engineers / Architects
130 East Randolph Street
Chicago, Illinois 60601
(312) 946-8600

USER NAME = nparris	DESIGNED -	REVISED -	
	DRAWN -	REVISED -	
PLOT SCALE =	CHECKED -	REVISED -	
PLOT DATE = 8/30/2011	DATE - 8/29/11	REVISED -	

STATE OF ILLINOIS
DEPARTMENT OF TRANSPORTATION

MCLEAN BLVD ENVIRONMENTAL ADAPTIVE MANAGEMENT PLANS
CROSS SECTIONS - ALIGNMENT A

SCALE: | SHEET NO. 1 OF 10 SHEETS | STA. 100+00.00 TO STA. 107+00.00

F.A.P. RTE.	SECTION	COUNTY	TOTAL SHEETS	SHEET NO.
361	06-00214-11-LS	KANE	54	45

CONTRACT NO.63638

FED. ROAD DIST. NO. | ILLINOIS | FED. AID PROJECT

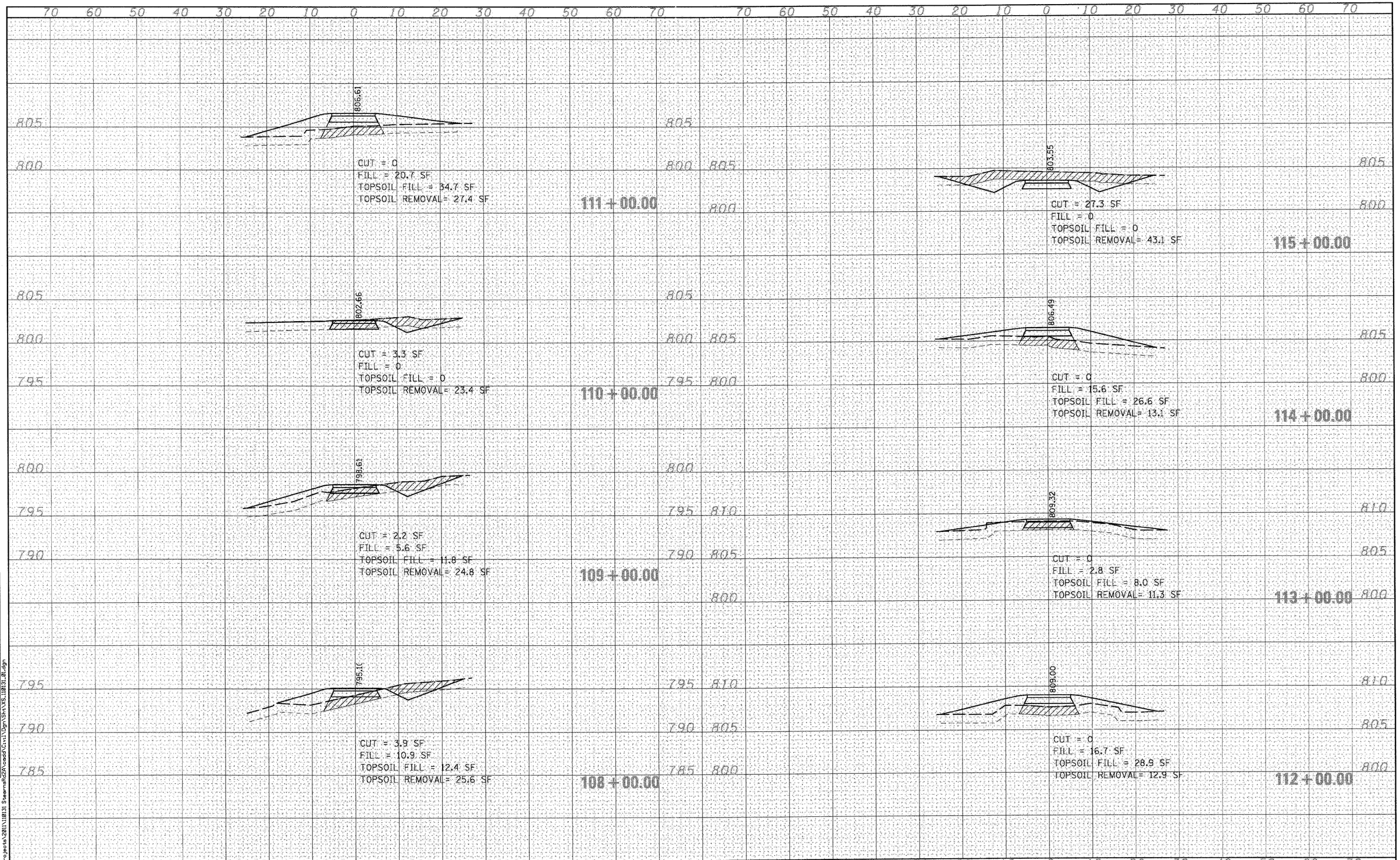

FINAL SURVEY | NOTE BOOK NO. | SURVEYED | PLOTTED | TEMPLATE | AREAS | AREAS CHECKED | BY | DATE

ORIGINAL SURVEY | NOTE BOOK NO. | SURVEYED | PLOTTED | TEMPLATE | AREAS | AREAS CHECKED | BY | DATE

FILE NAME = W:\Projects\2011\110131 StearnsRd2A\cadd\Civil\Dgn\Sht\XS_110131_01.dgn

McDonough Associates Inc.
Engineers / Architects
130 East Randolph Street
Chicago, Illinois 60601
(312) 946-8600

USER NAME = nparris	DESIGNED -	REVISED -	
	DRAWN -	REVISED -	
PLOT SCALE =	CHECKED -	REVISED -	
PLOT DATE = 8/30/2011	DATE - 8/29/11	REVISED -	

STATE OF ILLINOIS
DEPARTMENT OF TRANSPORTATION

MCLEAN BLVD ENVIRONMENTAL ADAPTIVE MANAGEMENT PLANS
CROSS SECTIONS - ALIGNMENT A

SCALE: | SHEET NO. 2 OF 10 SHEETS | STA. 108+00.00 TO STA. 115+00.00

F.A.P. RTE.	SECTION	COUNTY	TOTAL SHEETS	SHEET NO.
361	06-00214-11-LS	KANE	54	46
		CONTRACT NO.63638		
FED. ROAD DIST. NO.	ILLINOIS	FED. AID PROJECT		

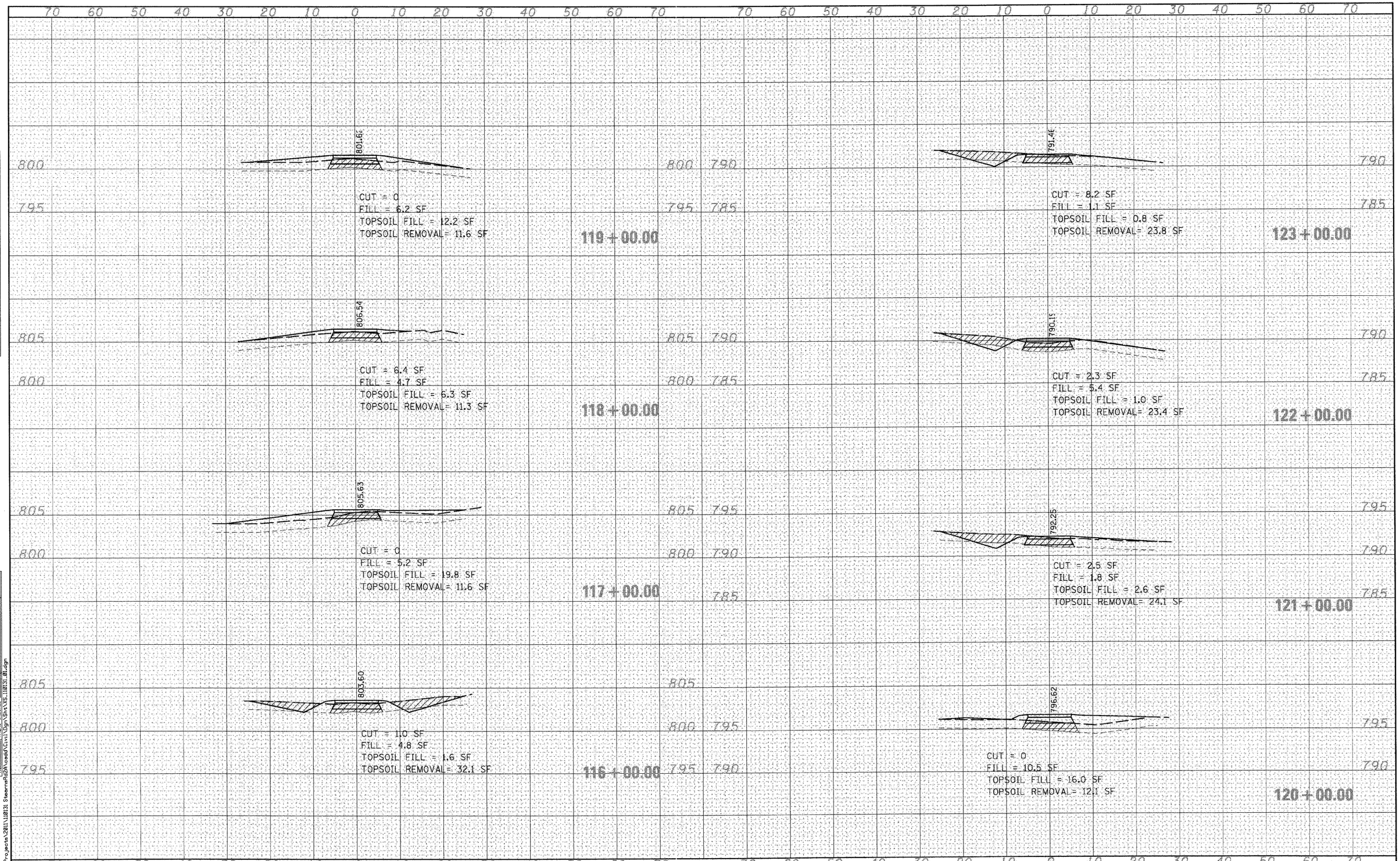

FINAL SURVEY — NOTE BOOK NO. — SURVEYED — PLOTTED — TEMPLATE — AREAS — AREAS CHECKED — BY — DATE

ORIGINAL SURVEY — NOTE BOOK NO. — SURVEYED — PLOTTED — TEMPLATE — AREAS — AREAS CHECKED — BY — DATE

FILE NAME = W:\Projects\2011\110131 StearnsRd2A\cadd\Civil\Dgn\Sht\XS_110131_01.dgn

McDonough Associates Inc.
Engineers / Architects
130 East Randolph Street
Chicago, Illinois 60601
(312) 946-8600

USER NAME = nparris	DESIGNED -	REVISED -	
	DRAWN -	REVISED -	
PLOT SCALE =	CHECKED -	REVISED -	
PLOT DATE = 8/30/2011	DATE - 8/29/11	REVISED -	

STATE OF ILLINOIS
DEPARTMENT OF TRANSPORTATION

MCLEAN BLVD ENVIRONMENTAL ADAPTIVE MANAGEMENT PLANS
CROSS SECTIONS - ALIGNMENT A

SCALE: | SHEET NO. 3 OF 10 SHEETS | STA. 116+00.00 TO STA. 123+00.00

F.A.P. RTE.	SECTION	COUNTY	TOTAL SHEETS	SHEET NO.
361	06-00214-11-LS	KANE	54	47

CONTRACT NO.63638

FED. ROAD DIST. NO. | ILLINOIS | FED. AID PROJECT

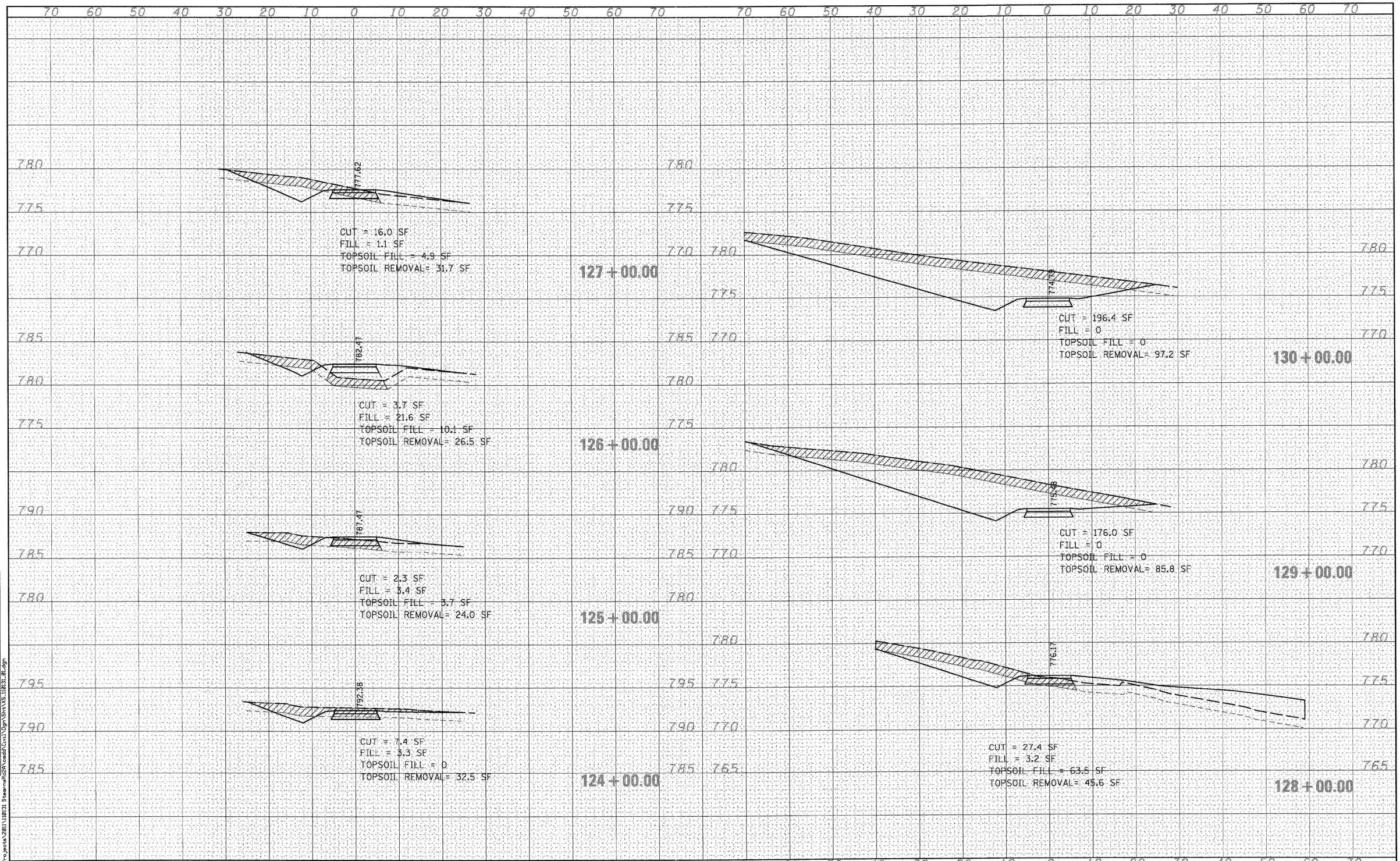

FINAL SURVEY		BY	DATE
NOTE BOOK	SURVEYED		
	PLOTTED		
	TEMPLATE		
	AREAS		
NO.	AREAS CHECKED		

ORIGINAL SURVEY		BY	DATE
NOTE BOOK	SURVEYED		
	PLOTTED		
	TEMPLATE		
	AREAS		
NO.	AREAS CHECKED		

FILE NAME = W:\Projects\2011\110131 SternaRd2A\cadd\Civil\Dgn\Sht\XS_110131_01.dgn

McDonough Associates Inc.
Engineers / Architects
130 East Randolph Street
Chicago, Illinois 60601
(312) 946-8600

USER NAME = nparris	DESIGNED -	REVISED -
	DRAWN -	REVISED -
PLOT SCALE =	CHECKED -	REVISED -
PLOT DATE = 8/30/2011	DATE - 8/29/11	REVISED -

STATE OF ILLINOIS
DEPARTMENT OF TRANSPORTATION

MCLEAN BLVD ENVIRONMENTAL ADAPTIVE MANAGEMENT PLANS
CROSS SECTIONS – ALIGNMENT A

SCALE: | SHEET NO. 4 OF 10 SHEETS | STA. 124+00.00 TO STA. 130+00.00

F.A.P. RTE.	SECTION	COUNTY	TOTAL SHEETS	SHEET NO.
361	08-00214-11-LS	KANE	54	48
		CONTRACT NO.63638		

FED. ROAD DIST. NO. | ILLINOIS | FED. AID PROJECT

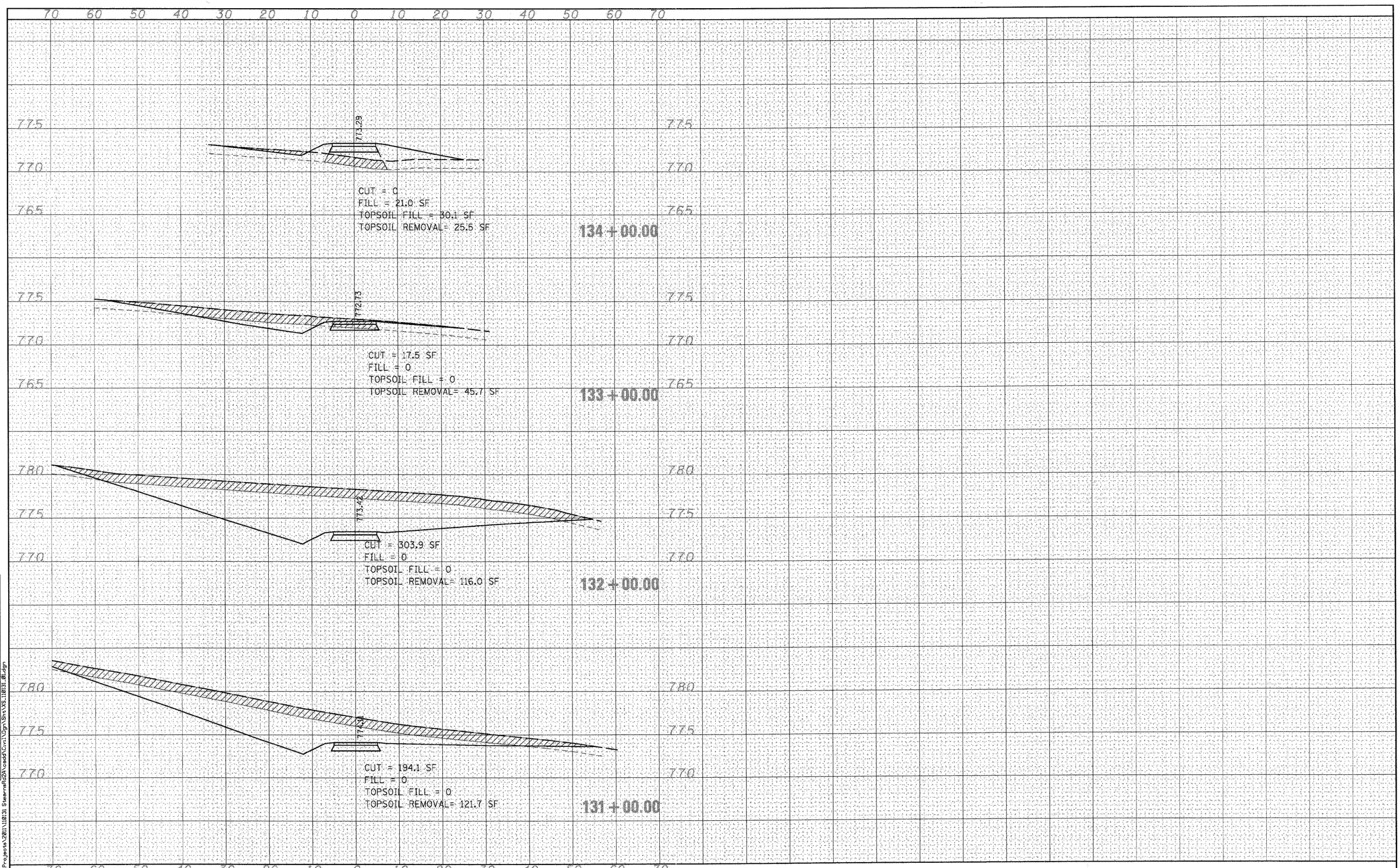

FINAL SURVEY | NOTE BOOK NO. | SURVEYED | PLOTTED | TEMPLATE | AREAS | AREAS CHECKED | BY | DATE

ORIGINAL SURVEY | NOTE BOOK NO. | SURVEYED | PLOTTED | TEMPLATE | AREAS | AREAS CHECKED | BY | DATE

FILE NAME = W:\Projects\2011\110131 SteernsRd2A\cadd\Civil\Dgn\Sht\XS_110131_01.dgn

McDonough Associates Inc.
Engineers / Architects
130 East Randolph Street
Chicago, Illinois 60601
(312) 946-8600

USER NAME = nparris	DESIGNED -	REVISED -
	DRAWN -	REVISED -
PLOT SCALE =	CHECKED -	REVISED -
PLOT DATE = 8/30/2011	DATE - 8/29/11	REVISED -

STATE OF ILLINOIS
DEPARTMENT OF TRANSPORTATION

MCLEAN BLVD ENVIRONMENTAL ADAPTIVE MANAGEMENT PLANS
CROSS SECTIONS - ALIGNMENT A

SCALE: | SHEET NO. 5 OF 10 SHEETS | STA. 131+00.00 TO STA. 134+00.00

F.A.P. RTE.	SECTION	COUNTY	TOTAL SHEETS	SHEET NO.
361	06-00214-11-LS	KANE	54	49

CONTRACT NO.63638

FED. ROAD DIST. NO. | ILLINOIS | FED. AID PROJECT

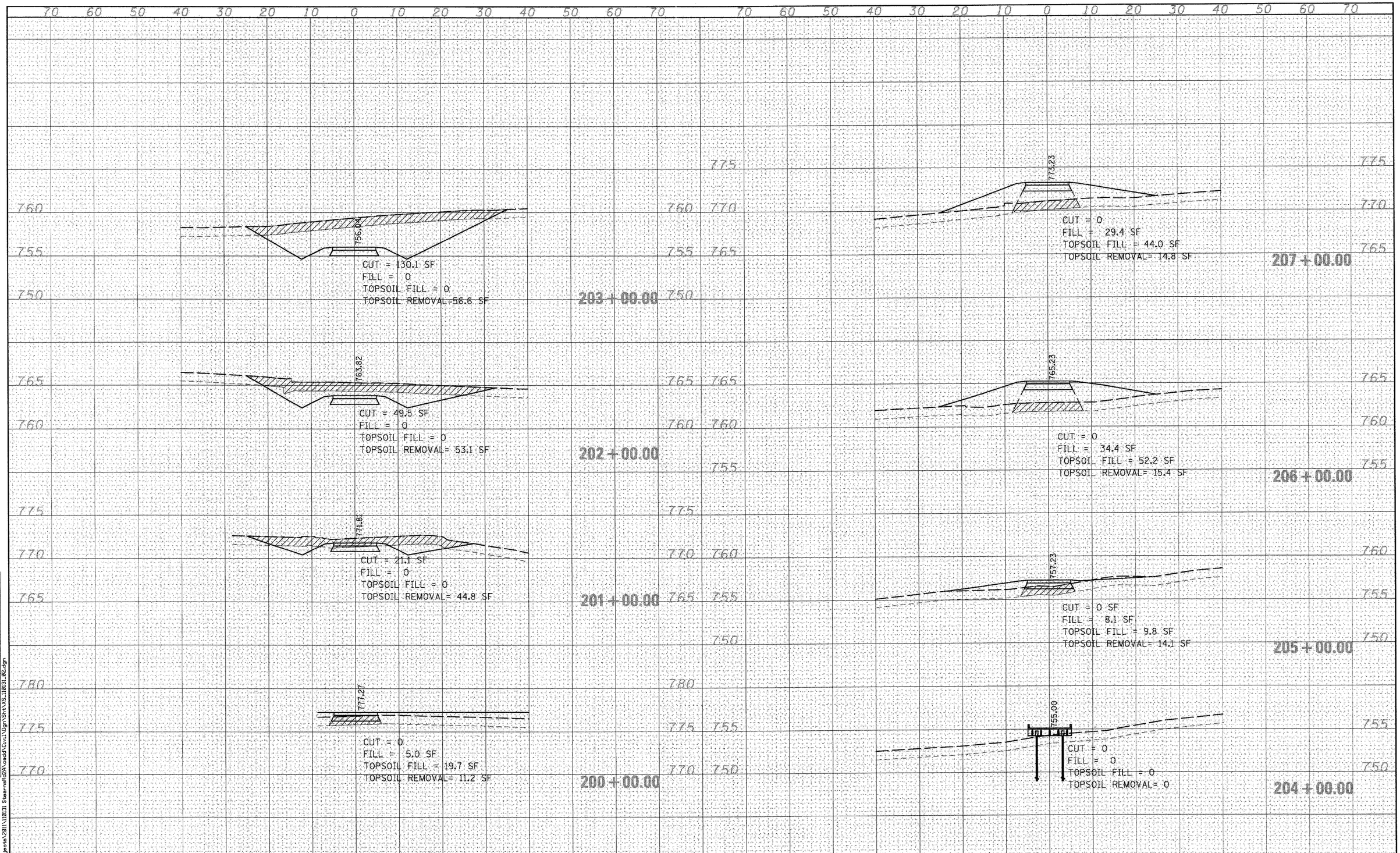

FINAL SURVEY	BY	DATE
SURVEYED		
PLOTTED		
TEMPLATE		
AREAS		
AREAS CHECKED		
NOTE BOOK NO.		

ORIGINAL SURVEY	BY	DATE
SURVEYED		
PLOTTED		
TEMPLATE		
AREAS		
AREAS CHECKED		
NOTE BOOK NO.		

FILE NAME = W:\Projects\2011\11031 Steamwhd2A\cadd\Civil\Dgn\Sht\XS_11031_02.dgn

McDonough Associates Inc.
Engineers / Architects
130 East Randolph Street
Chicago, Illinois 60601
(312) 946-6600

USER NAME = nparris	DESIGNED -	REVISED -
	DRAWN -	REVISED -
PLOT SCALE =	CHECKED -	REVISED -
PLOT DATE = 8/30/2011	DATE - 8/29/11	REVISED -

STATE OF ILLINOIS
DEPARTMENT OF TRANSPORTATION

MCLEAN BLVD ENVIRONMENTAL ADAPTIVE MANAGEMENT PLANS
CROSS SECTIONS – ALIGNMENT B

SCALE: | SHEET NO. 6 OF 10 SHEETS | STA. 200+00.00 TO STA. 207+00.00

F.A.P. RTE.	SECTION	COUNTY	TOTAL SHEETS	SHEET NO.
361	06-00214-11-LS	KANE	54	50
		CONTRACT NO.63638		
FED. ROAD DIST. NO.	ILLINOIS	FED. AID PROJECT		

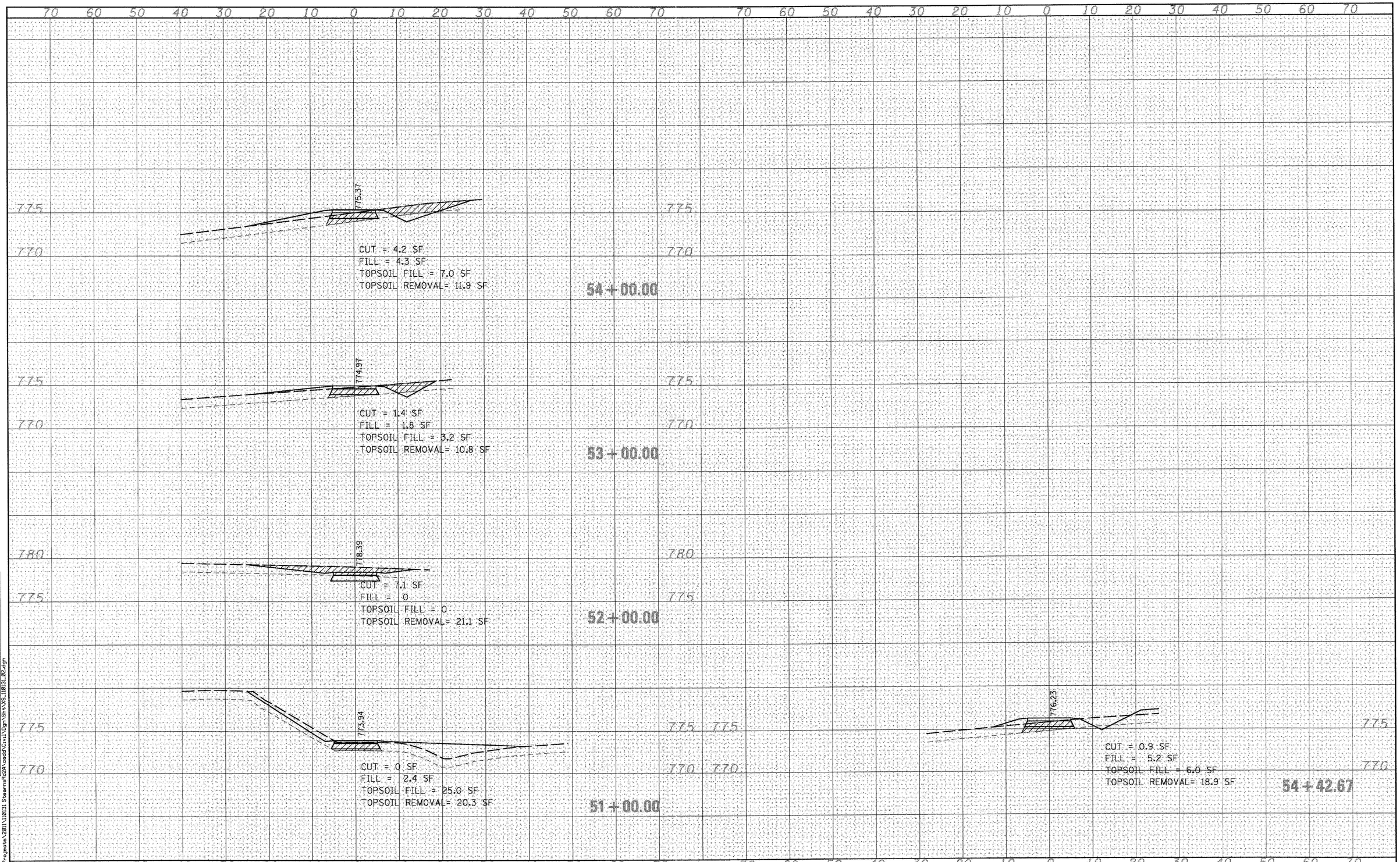

FINAL SURVEY | NOTE BOOK NO. | SURVEYED | PLOTTED | TEMPLATE | AREAS | AREAS CHECKED | BY | DATE

ORIGINAL SURVEY | NOTE BOOK NO. | SURVEYED | PLOTTED | TEMPLATE | AREAS | AREAS CHECKED | BY | DATE

FILE NAME = W:\Projects\2011\110131 Stearns Rd2A\cadd\Civil\Dgn\Sht\XS_110131_02.dgn

McDonough Associates Inc.
Engineers / Architects
130 East Randolph Street
Chicago, Illinois 60601
(312) 946-8600

USER NAME = nparris	DESIGNED -	REVISED -	
	DRAWN -	REVISED -	
PLOT SCALE =	CHECKED -	REVISED -	
PLOT DATE = 8/30/2011	DATE - 8/29/11	REVISED -	

STATE OF ILLINOIS
DEPARTMENT OF TRANSPORTATION

MCLEAN BLVD ENVIRONMENTAL ADAPTIVE MANAGEMENT PLANS
CROSS SECTIONS - ALIGNMENT C

SCALE: | SHEET NO. 7 OF 10 SHEETS | STA. 51+00.00 TO STA. 54+42.67

F.A.P. RTE.	SECTION	COUNTY	TOTAL SHEETS	SHEET NO.
361	09-00214-11-LS	KANE	54	51

CONTRACT NO.63638

FED. ROAD DIST. NO. | ILLINOIS | FED. AID PROJECT

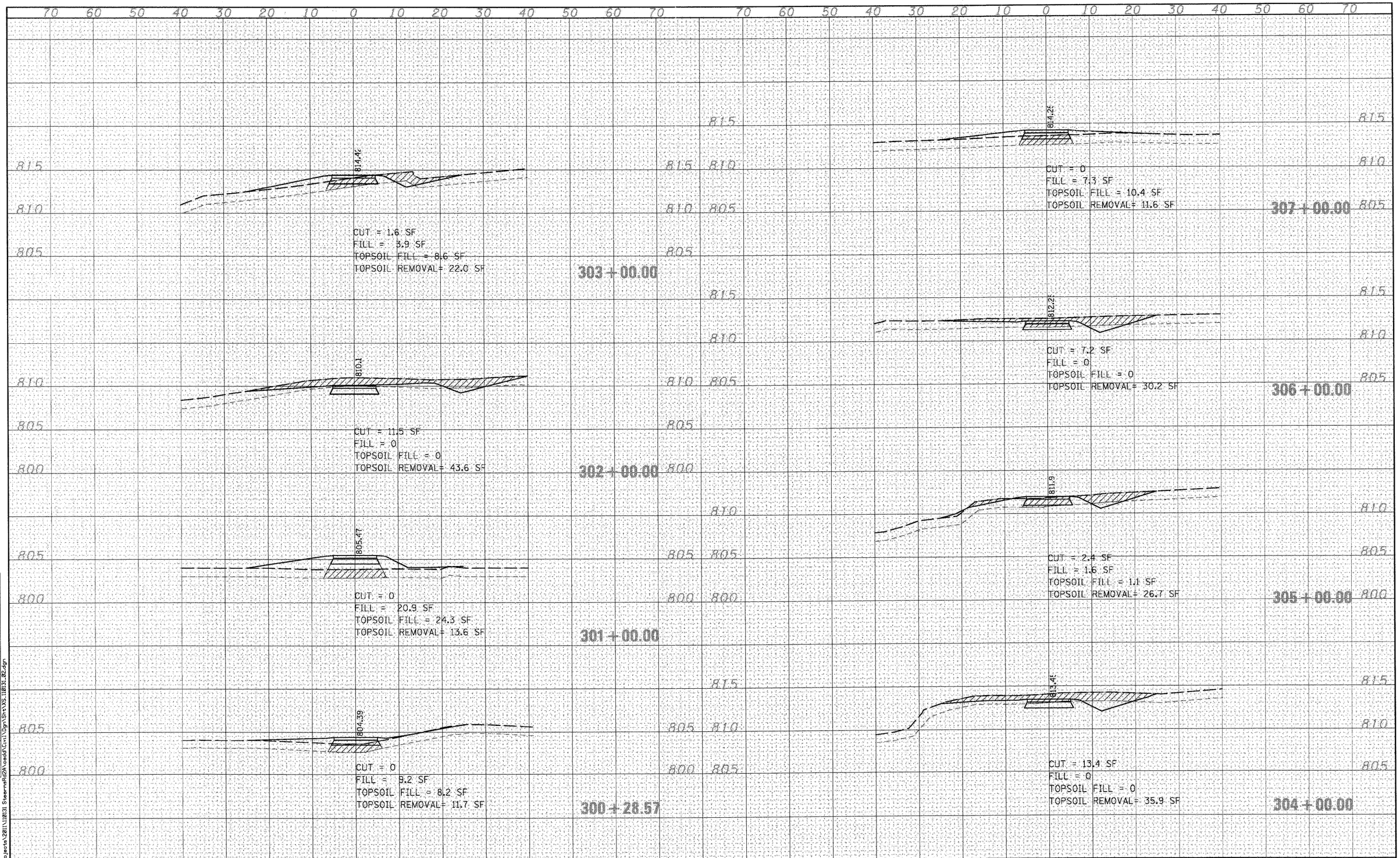

FINAL SURVEY — NOTE BOOK NO. — SURVEYED — PLOTTED — TEMPLATE — AREAS — AREAS CHECKED — BY — DATE

ORIGINAL SURVEY — NOTE BOOK NO. — SURVEYED — PLOTTED — TEMPLATE — AREAS — AREAS CHECKED — BY — DATE

FILE NAME = W:\Projects\2011\110131 SteernsRd2A\cadd\Civil\Dgn\Sht\XS_110131_02.dgn

McDonough Associates Inc.
Engineers / Architects
130 East Randolph Street
Chicago, Illinois 60601
(312) 946-8600

USER NAME = nparris	DESIGNED -	REVISED -	
	DRAWN -	REVISED -	
PLOT SCALE =	CHECKED -	REVISED -	
PLOT DATE = 8/30/2011	DATE - 8/29/11	REVISED -	

STATE OF ILLINOIS
DEPARTMENT OF TRANSPORTATION

MCLEAN BLVD ENVIRONMENTAL ADAPTIVE MANAGEMENT PLANS
CROSS SECTIONS - ALIGNMENT D

SCALE: | SHEET NO. 8 OF 10 SHEETS | STA. 300+28.57 TO STA. 307+00.00

F.A.P. RTE.	SECTION	COUNTY	TOTAL SHEETS	SHEET NO.
361	09-00214-11-LS	KANE	54	52
		CONTRACT NO.63638		

FED. ROAD DIST. NO. | ILLINOIS | FED. AID PROJECT

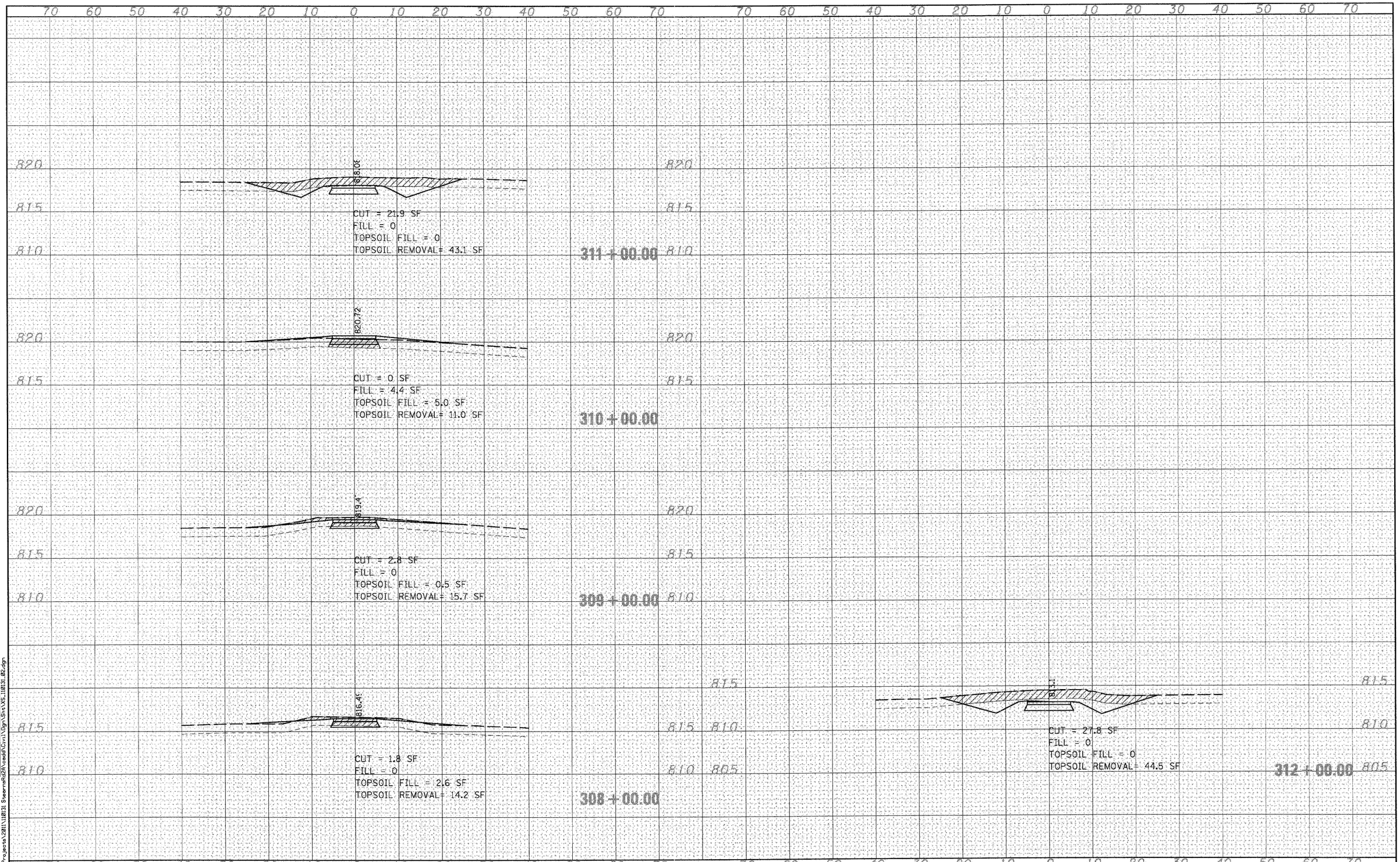

FINAL SURVEY — NOTE BOOK NO. — SURVEYED — PLOTTED — TEMPLATE — AREAS — AREAS CHECKED — BY — DATE

ORIGINAL SURVEY — NOTE BOOK NO. — SURVEYED — PLOTTED — TEMPLATE — AREAS — AREAS CHECKED — BY — DATE

FILE NAME = W:\Projects\2011\110131 SteernsRd2A\cadd\Civil\Dgn\Sht\XS_110131_02.dgn

McDonough Associates Inc.
Engineers / Architects
130 East Randolph Street
Chicago, Illinois 60601
(312) 946-8600

USER NAME = nparris	DESIGNED -	REVISED -
	DRAWN -	REVISED -
PLOT SCALE =	CHECKED -	REVISED -
PLOT DATE = 8/30/2011	DATE - 8/29/11	REVISED -

STATE OF ILLINOIS
DEPARTMENT OF TRANSPORTATION

MCLEAN BLVD ENVIRONMENTAL ADAPTIVE MANAGEMENT PLANS
CROSS SECTIONS - ALIGNMENT D

SCALE: | SHEET NO. 9 OF 10 SHEETS | STA. 308+00.00 TO STA. 312+00.00

F.A.P. RTE.	SECTION	COUNTY	TOTAL SHEETS	SHEET NO.
361	06-00214-11-LS	KANE	54	53
		CONTRACT NO.63638		

FED. ROAD DIST. NO. | ILLINOIS | FED. AID PROJECT

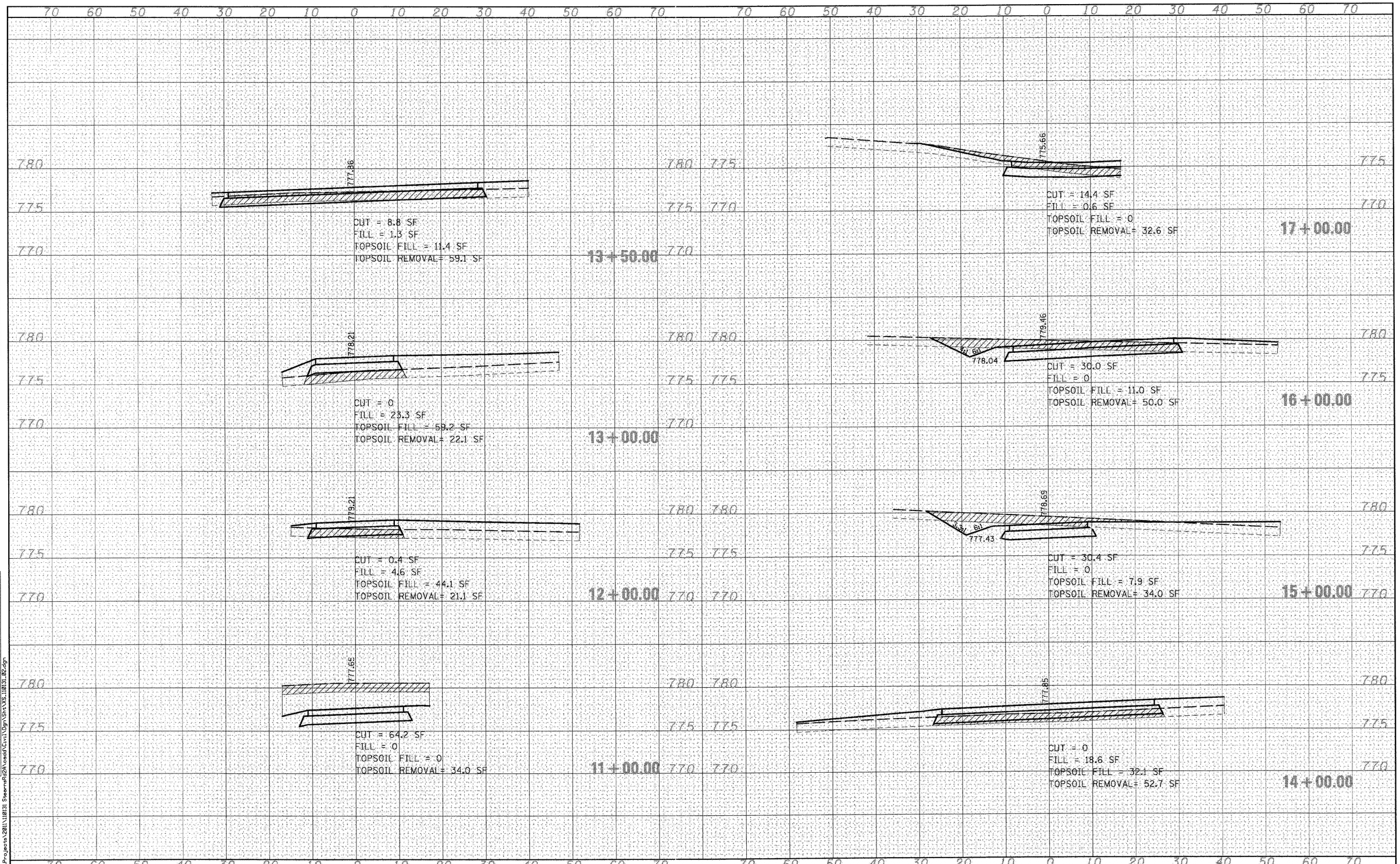

FINAL SURVEY | NOTE BOOK NO. | SURVEYED | PLOTTED | TEMPLATE | AREAS | AREAS CHECKED | BY | DATE

ORIGINAL SURVEY | NOTE BOOK NO. | SURVEYED | PLOTTED | TEMPLATE | AREAS | AREAS CHECKED | BY | DATE

FILE NAME = W:\Projects\2011\110131 StearnsRd2A\cadd\Civil\Dgn\Sht\XS_110131_02.dgn

McDonough Associates Inc.
Engineers / Architects
130 East Randolph Street
Chicago, Illinois 60601
(312) 946-8600

USER NAME = nparris	DESIGNED -	REVISED -
	DRAWN -	REVISED -
PLOT SCALE =	CHECKED -	REVISED -
PLOT DATE = 8/30/2011	DATE - 8/29/11	REVISED -

STATE OF ILLINOIS
DEPARTMENT OF TRANSPORTATION

MCLEAN BLVD ENVIRONMENTAL ADAPTIVE MANAGEMENT PLANS
CROSS SECTIONS - ALIGNMENT E

SCALE: | SHEET NO. 10 OF 10 SHEETS | STA. 11+00.00 TO STA. 17+00.00

F.A.P. RTE.	SECTION	COUNTY	TOTAL SHEETS	SHEET NO.
361	06-00214-11-LS	KANE	54	54
		CONTRACT NO.63638		
FED. ROAD DIST. NO.	ILLINOIS	FED. AID PROJECT		