SEC. 19, T. 22 N., R. 4 E., 3rd P.M.

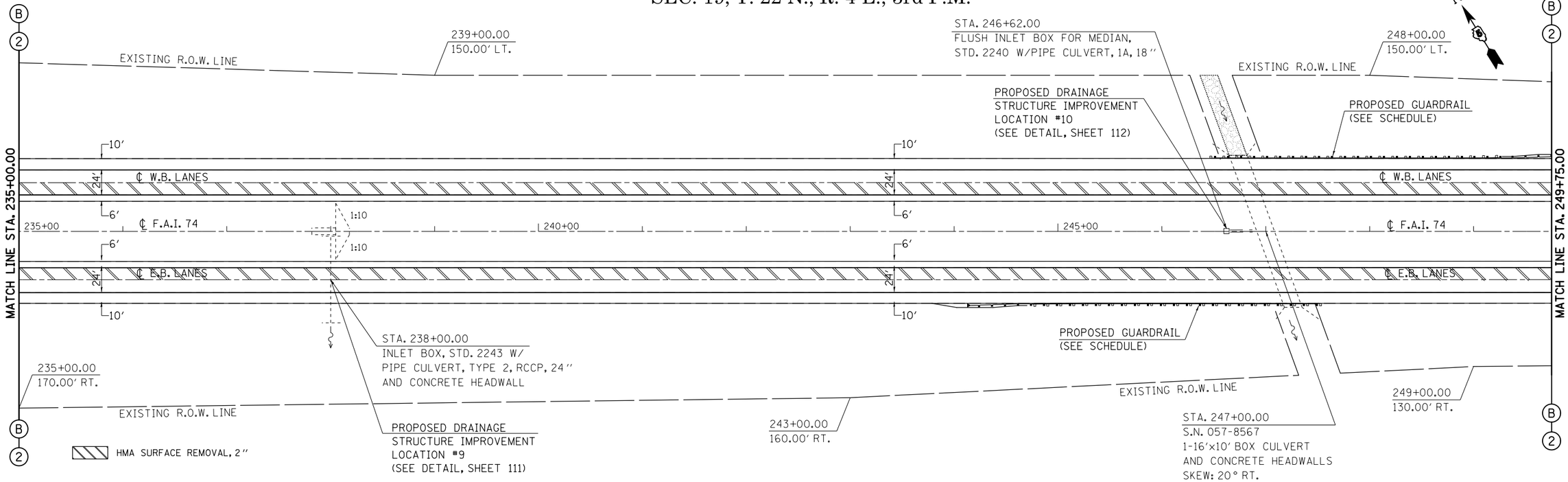

SEC. 20, T. 22 N., R. 4 E., 3rd P.M.

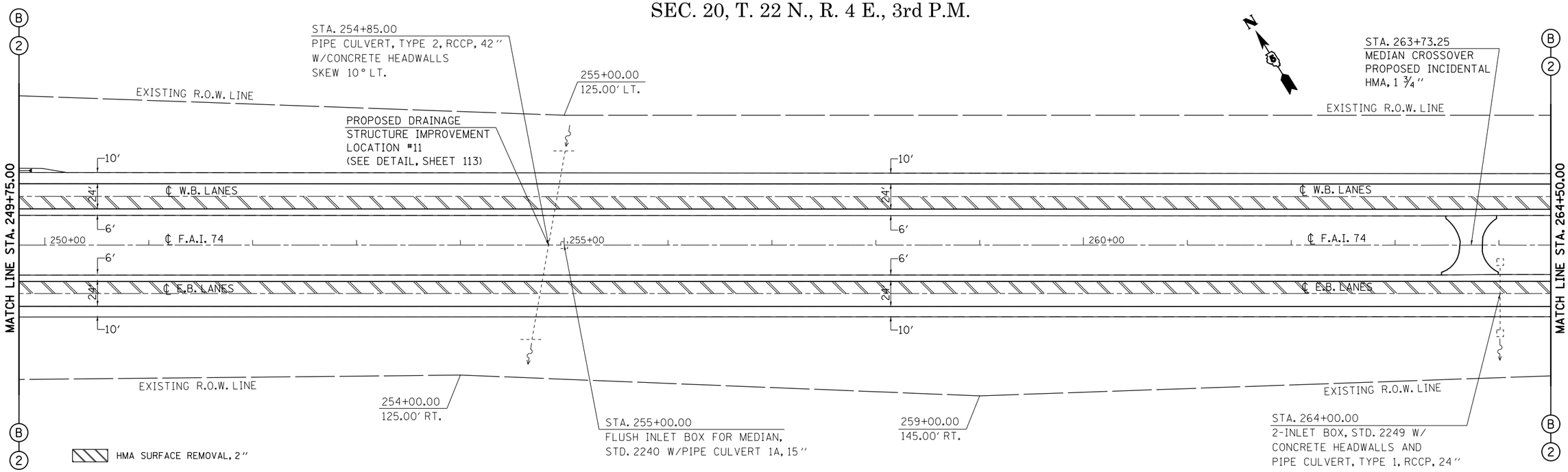

FILE NAME = c:\pw_work\pwidot\piersonbr\d0184863\D570648-sht-plan.dgn	USER NAME = piersonbr	DESIGNED - GAE	REVISED -	STATE OF ILLINOIS DEPARTMENT OF TRANSPORTATION	F.A.I. 74 (I-74) PLAN SHEETS	F.A.I. RTE.	SECTION	COUNTY	TOTAL SHEETS	SHEET NO.
	PLOT SCALE = 100.0000 ' / in.	DRAWN - BBP	REVISED -			74	(57-23,57-24)RS-1	MCLEAN	175	49
	PLOT DATE = 8/25/2011	CHECKED -	REVISED -					CONTRACT NO. 70648		
		DATE - 08/26/10	REVISED -		SCALE: 1'' = 50' / SHEET NO. 11 OF 15 SHEETS / STA. 235+00.00 TO STA. 264+50.00			ILLINOIS FED. AID PROJECT		