NOTES:

1. ALL RADII DIMENSIONED TO FACE OF CURB, UNLESS OTHERWISE NOTED.
2. ALL CURB AND GUTTER AT THE SPLITTER ISLANDS ARE COMBINATION CONCRETE CURB GUTTER, B6.12 OR B6.24.
3. PRIMATIC REFLECTORS SHALL BE MONO-DIRECTIONAL AND POSITIONED SO THAT THE REFLECTIVE FACE IS FACING THE APPROACHING TRAFFIC.
4. PRISMATIC REFLECTORS SHALL BE SECURED IN PLACE WITH AN EPOXY ADHESIVE.
5. PRISMATIC REFLECTORS SHALL BE CRYSTAL OR AMBER IN COLOR.
6. CURB FACE AND TOP SHALL BE PAINTED IN ACCORDANCE WITH SECTION 780.06 OF THE "STANDARD SPECIFICATIONS FOR ROAD AND BRIDGE CONSTRUCTION." ALL CURBS SHALL BE PAINTED YELLOW UNLESS NOTED.

   WHITE CURB FACE AND TOPS

7. SEE PAVEMENT MARKING PLANS FOR PAVEMENT MARKINGS IN THE VICINITY OF THE SPLITTER ISLANDS.

▷ ONE-WAY CRYSTAL PRISMATIC CURB REFLECTOR

▶ ONE-WAY AMBER PRISMATIC CURB REFLECTOR

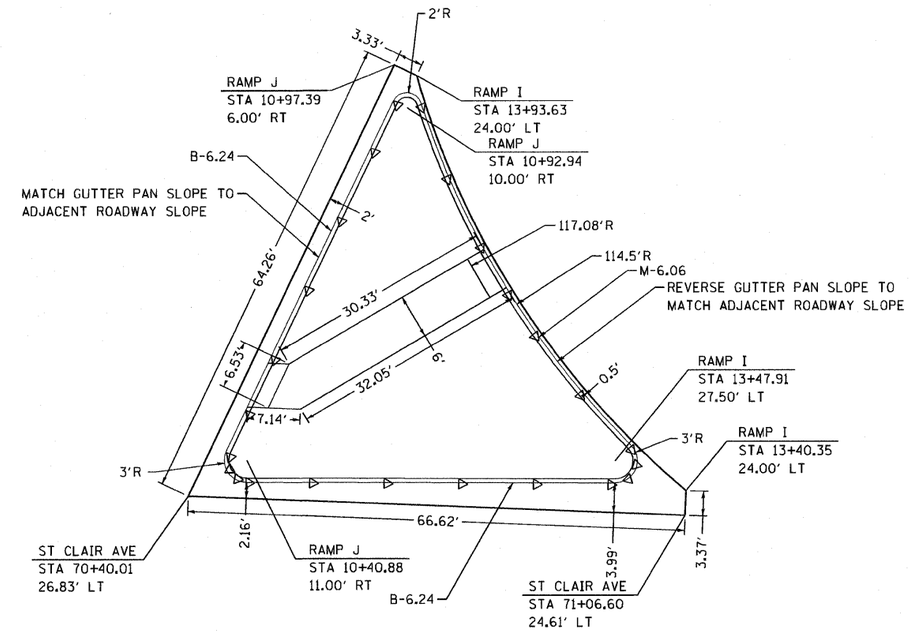

RAMP I & RAMP J
SPLITTER ISLAND DETAILS

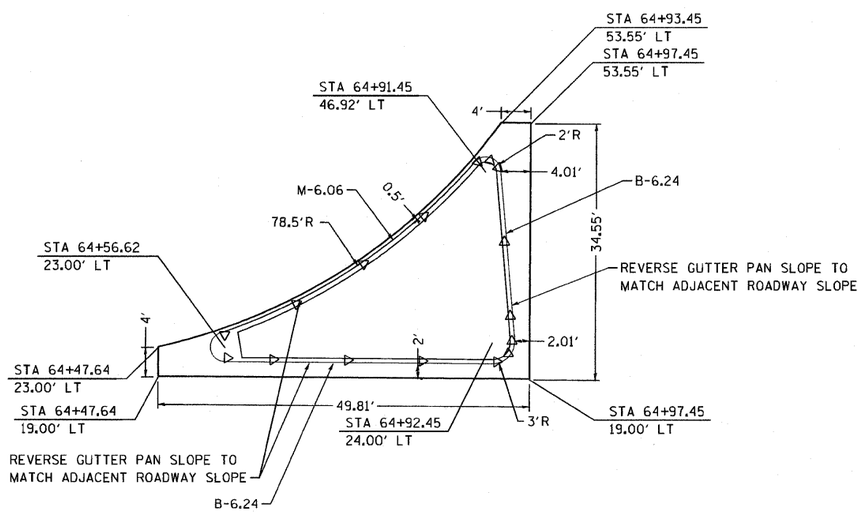

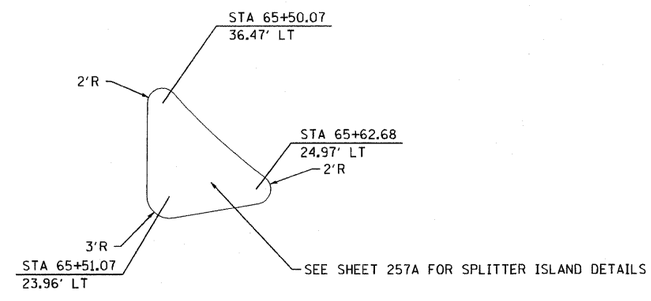

ST. CLAIR AVENUE
SPLITTER ISLAND DETAILS

FILE NAME = D8TRI-76C51-sht-intersect-01-11.dgn	USER NAME = jlt	DESIGNED - LDT	REVISED -	STATE OF ILLINOIS DEPARTMENT OF TRANSPORTATION	SPLITTER ISLAND DETAIL PLAN			F.A.U. RTE.	SECTION	COUNTY	TOTAL SHEETS / SHEET NO.
	MODEL NAME = D8TRI-76C51-sht-intersect-11	DRAWN - MBB	REVISED -					•	82-1-3HB, 82-2N, 82-1-12RS	ST. CLAIR	352 / 133
	PLOT SCALE = 1:20	CHECKED - GEB	REVISED -					• FAI 64/9166/9180		CONTRACT NO. 76C51	
	PLOT DATE = 6/8/2011	DATE - 03/31/11	REVISED -		SCALE: 1"=10'	SHEET NO. 11 OF 11 SHEETS	STA. ----- TO STA. -----	FED. ROAD DIST. NO.	ILLINOIS	FED. AID PROJECT	

6/8/2011 11:26:44 AM

P:\08-0030 CTE TRILEVEL\900_CAD\901_DRAWINGS\08_CONTRACT\SHEET\CIVIL\ROADWAY_PLANS\D8TRI-76C51-SHT-INTERSECT-01-11.DGN