STATE OF ILLINOIS
DEPARTMENT OF TRANSPORTATION

* Order $a(E)$, $a_1(E)$ and $a_3(E)$ bars full length. Cut to fit skew and use remainder of bars in opposite end.

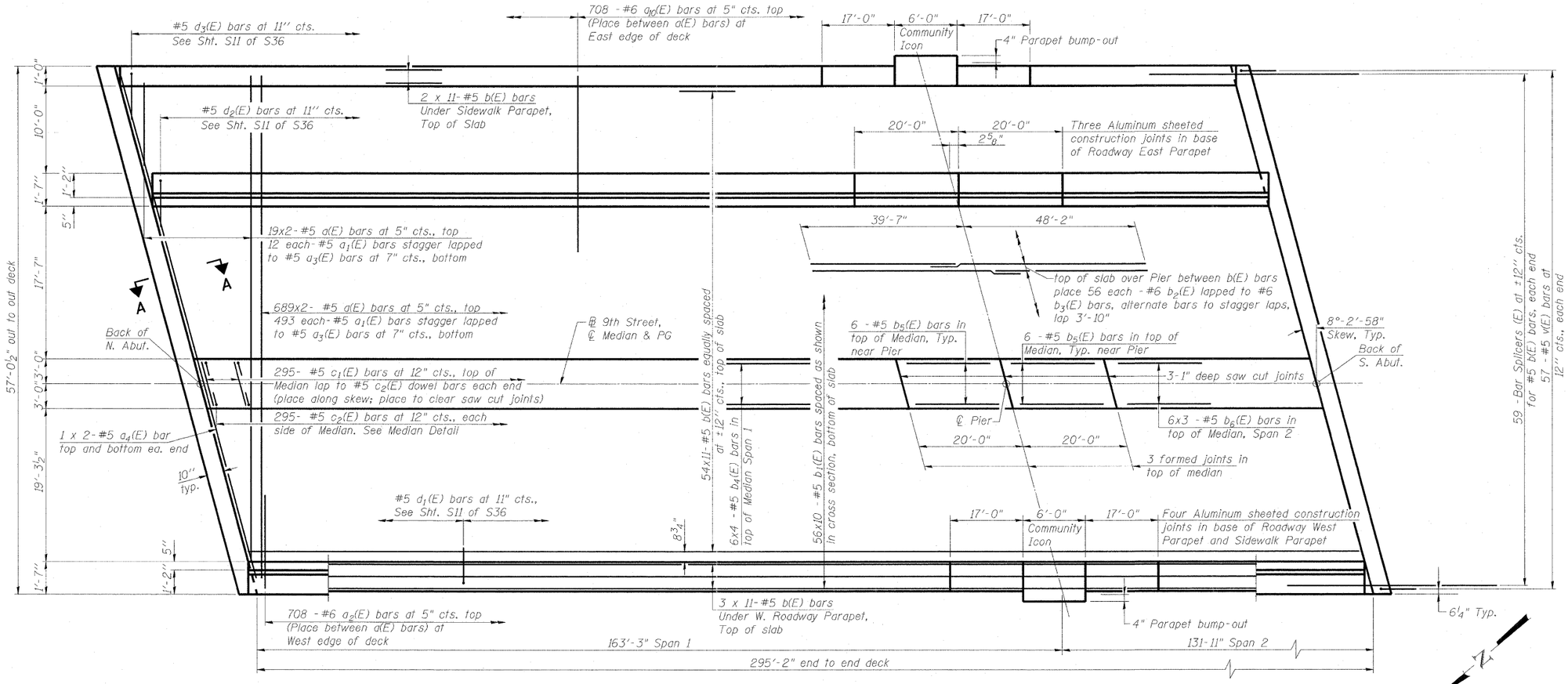


## DECK PLAN

Note:
Bars indicated thus 20 x 3-#5 etc. indicates 20 lines of bars with 3 lengths per line.

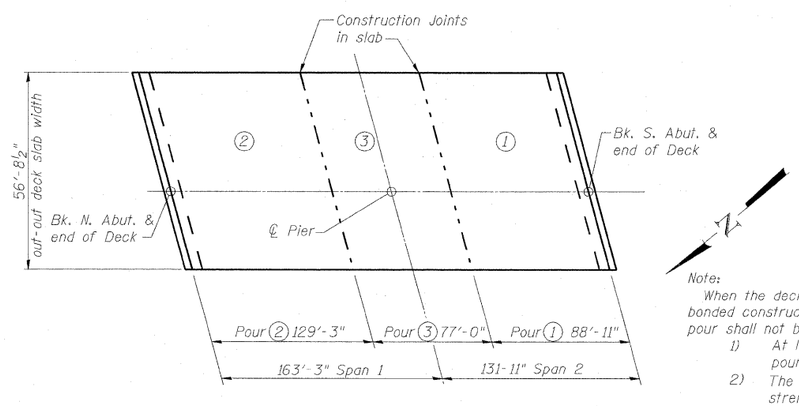


## MANDATORY DECK POURING SEQUENCE

Note:
When the deck pour is stopped for the day at one or more of the transverse bonded construction joints in the deck pouring sequence as shown, the next pour shall not be made until both of the following are met:

1) At least 72 hours shall have elapsed from the end of the previous pour.
2) The concrete strength shall have attained a minimum flexural strength of 650 psi or a minimum compressive strength of 3500 psi.

See notes regarding dead load deflections and fillet heights on Sht. S4 of S36. Deflections are based on Pours 1 and 2 being made in one day, and pour 3 on a later day.

## MINIMUM BAR LAP

(Superstructure)
#4 bar = 2'-7"
#5 bar = 3'-3"
#6 $b_2(E)$ & $b_3(E)$ = 3'-10"
#6 m-series = 4'-5"
#8 bar = 6'-9"

## DECK CROSS REFERENCES SEE:

Deck Cross Section - Sht. S10 of S36
Parapet Sections, Elevations, Joints & Details - Sht. S11 to S13 of S36
Section A-A, Integral Abutment Diaphragm Detail - Sht. S14 of S36
Reinforcement Schedules & Bill of Material - Sht. S15 of S36


AECOM
303 East Wacker Drive, Suite 600
Chicago, Illinois 60601
Ph: 312.938.0300
Fax: 312.373.6806
www.aecom.com


| | |
|---|---|
| DESIGNED | PJL |
| CHECKED | DDB |
| DRAWN | BRD |
| CHECKED | DDB |

03/31/2011

## DECK PLAN
## STRUCTURE NO. 082-0326

| SHEET NO. S9 | F.A.I. RTE. | SECTION | COUNTY | TOTAL SHEETS | SHEET NO. |
|---|---|---|---|---|---|
| S36 SHEETS | 64 | 82-1-3HB, 82-2N, 82-1-12RS | ST. CLAIR | 352 | 211 |
| | F.A.U. 9166 / F.A.U. 9180 | | CONTRACT NO. 76C51 | | |
| | FED. ROAD DIST. NO. | ILLINOIS | FED. AID PROJECT | | |