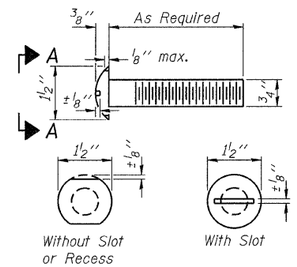

VIEW A-A
ROUND HEAD BOLT

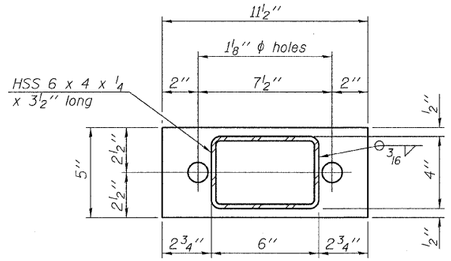

PL 1/2" x 11 1/2" x 5"

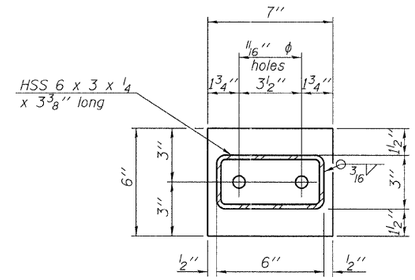

PL 1/2" x 7" x 6"

Note: Cost of curled end sections shall be included with the Steel Railing. (4 Required)

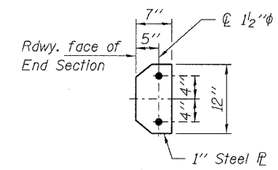

SECTION E-E

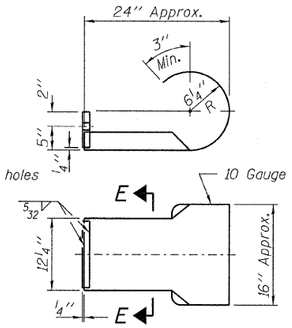

CURLED END SECTION DETAILS

Notes:

All field drilled holes shall be coated with an approved zinc rich paint before erection.

For multi-span bridges, sufficient 1/4" x 6" x 1'-2" galvanized steel shims shall be provided to align rail between adjacent spans. Cost included with Steel Railing, Type S-1.

All steel rail elements shall be galvanized according to Article 509.05 of the Standard Specifications.

*** The studs of the anchor devices shall be placed below the top reinforcement bars and the outermost longitudinal reinforcement bar shall be placed directly above the studs of the rail post anchor device.

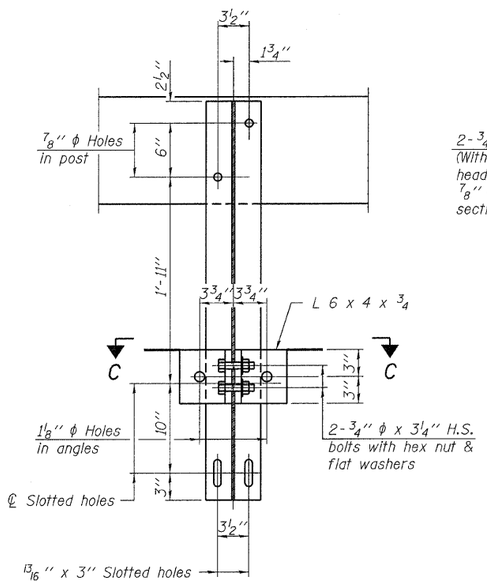

SECTION B-B

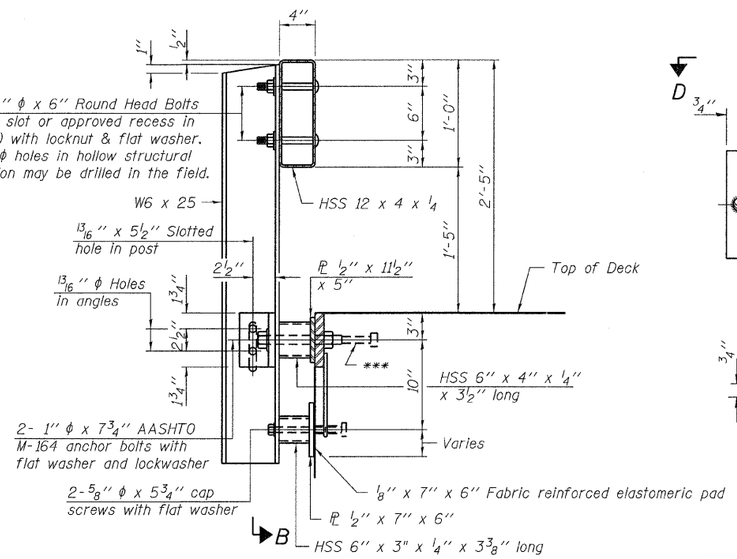

SECTION AT RAILING POST

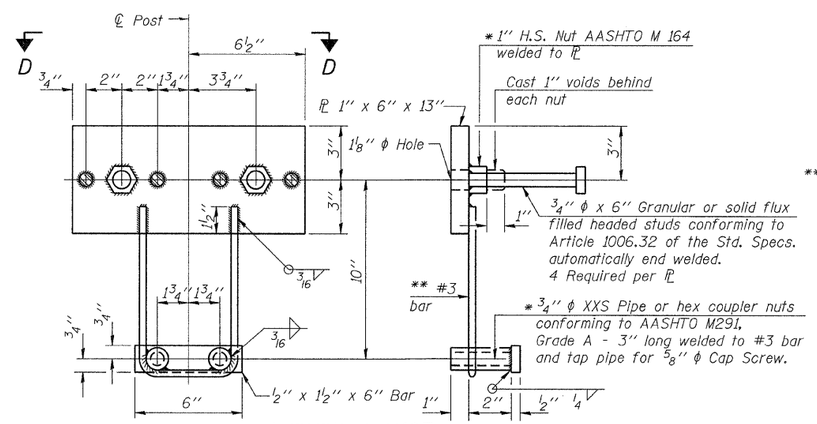

ANCHOR DEVICE

* Threaded areas shall be plugged or blocked off during casting of beam.

VIEW D-D

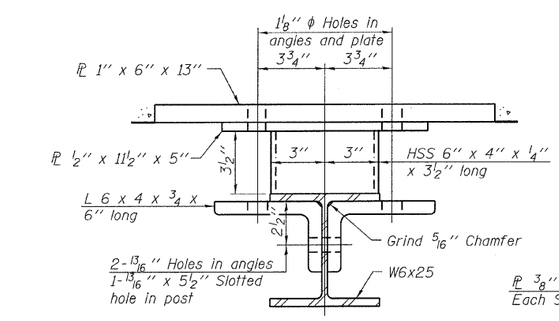

SECTION C-C

** Whenever the lower insert assemblies interfere with strand locations, the #3 bars shall be cut and adjusted in order to allow raising or lowering of the lower inserts. Maximum adjustment not to exceed 1/2".

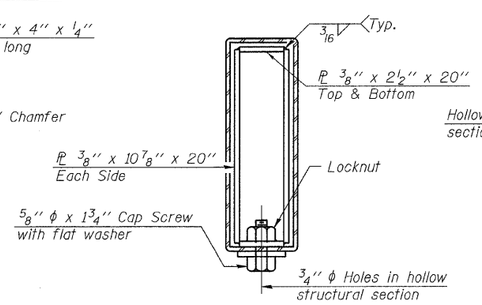

SECTIONS AT RAIL SPLICE

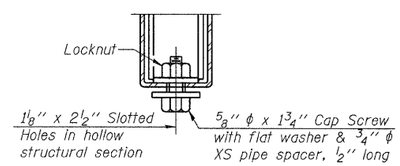

RAIL SPLICE CONNECTION
AT EXPANSION JT.

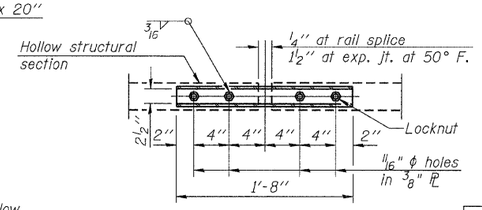

PLAN-BOTT. SPLICE PL
TYPICAL

1 1/8" ϕ Holes for 1" ϕ x 4" Round head bolts. Provide 2 flat washers & locknuts for guard rail connection shown on Hwy. Std. 631026 or BLR 27-1.

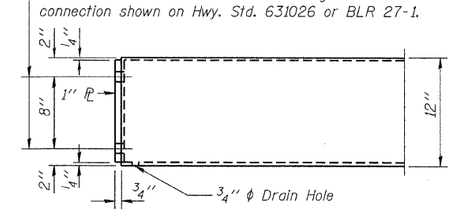

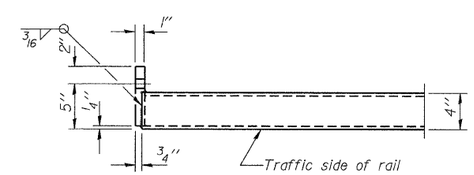

END OF RAIL DETAILS

BILL OF MATERIAL

Item	Unit	Quantity
Steel Railing, Type S-1	Foot	78

STEEL RAILING, TYPE S-1
STRUCTURE NO. 028-3406

DESIGNED -	A.S.L.
CHECKED -	S.W.M.
DRAWN -	D.A.B.
CHECKED -	S.W.M.

R-23A 11-1-09 (10'-9" Maximum Post Spacing)

HAMPTON, LENZINI AND RENWICK, INC.
CIVIL ENGINEERS · STRUCTURAL ENGINEERS · LAND SURVEYORS
3085 STEVENSON DRIVE, SUITE 201
SPRINGFIELD, ILLINOIS 62703
217.546.3400 www.hlrengineering.com
184.002959
ILLINOIS PROFESSIONAL DESIGN FIRM LS / PE / SE CORPORATION
PROJECT NUMBER: 09.0150.130 DATE: 02/07/11

T.R.	SECTION	COUNTY	TOTAL SHEETS	SHEET NO.
272	08-02136-00-BR	FRANKLIN	16	13
BENTON ROAD DISTRICT		CONTRACT NO. 99426		
FED. ROAD DIST. NO.	ILLINOIS	FED. AID PROJECT BROS-0055(061)		