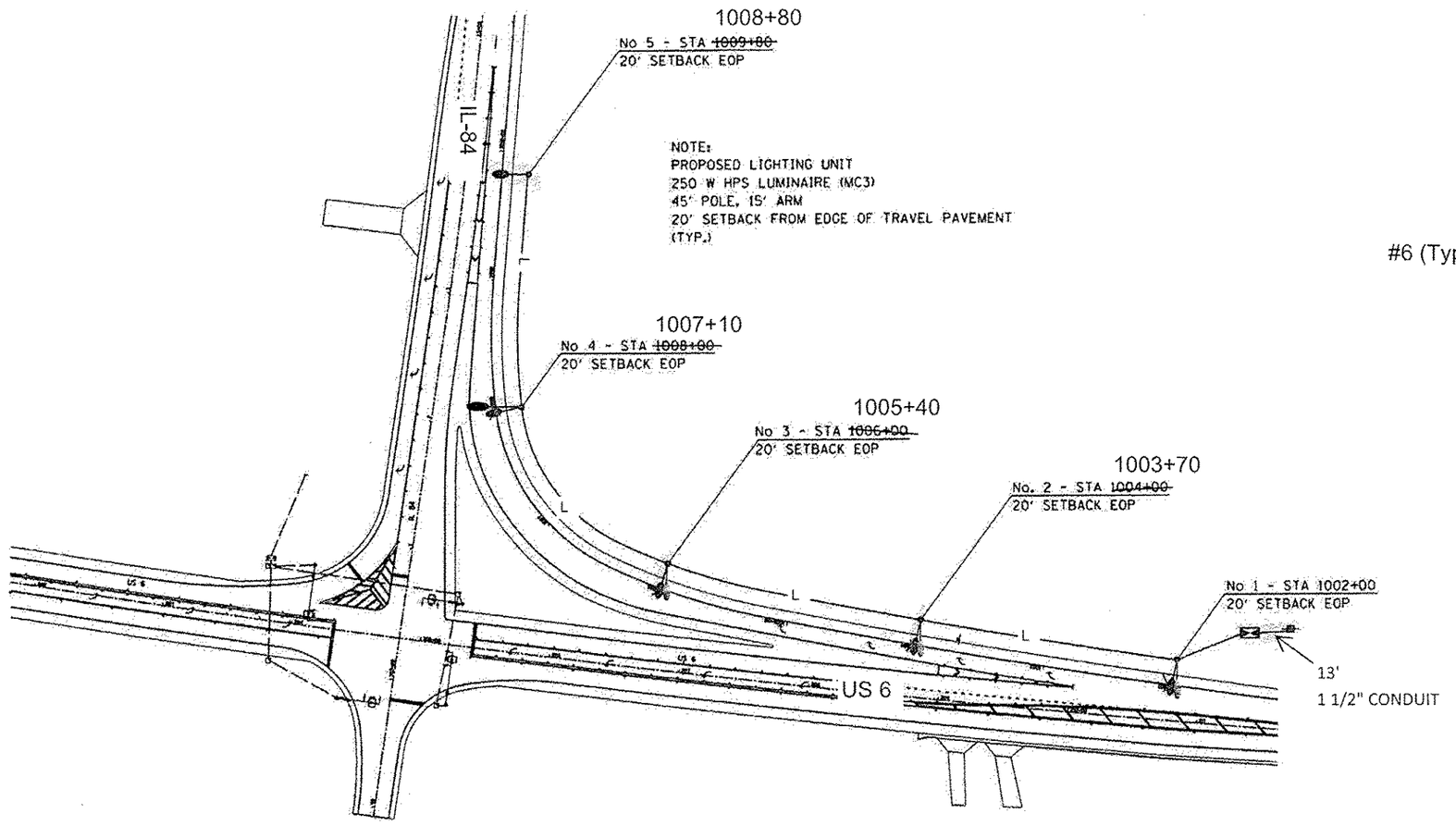

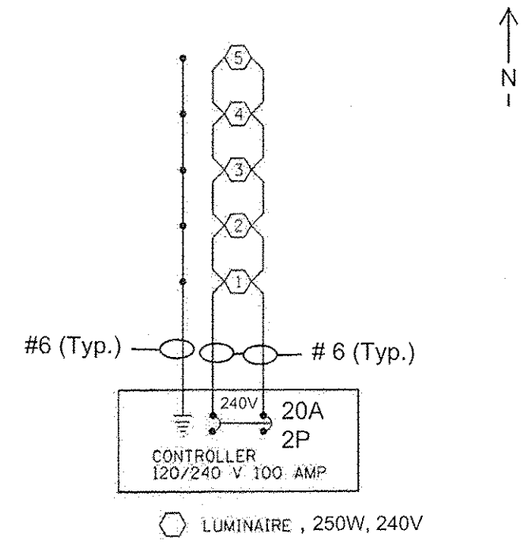

ELECTRIC SERVICE

PROPOSED LIGHTING CONTROLLER , PEDESTAL MOUNTED, 240 VOLT, 100 AMP

PROPOSED LUMINAIRE

UNIT DUCT, 600V, 2-1C No. 6, 1/C No. 6 GROUND, (XLP-TYPE USE), 1" POLYETHYLENE

* 5789 & 5861

FILE NAME =	USER NAME = cushmanbe	DESIGNED -	REVISED -	STATE OF ILLINOIS DEPARTMENT OF TRANSPORTATION	LIGHTING ~~AND SIGNAL~~ PLANS US 6 AT IL 84	F.A.U. RTE.	SECTION	COUNTY	TOTAL SHEETS	SHEET NO.
c:\pwwork\pwidot\cushmanbe\d0333089\D201709-sht-ex.dgn		DRAWN -	REVISED -			*	2R-1	HENRY	235	66
	PLOT SCALE = 100.0000 ' / in.	CHECKED -	REVISED -					CONTRACT NO. 64J43		
Default	PLOT DATE = Fri Aug 01 11:00:03 2014	DATE -	REVISED -		SCALE: SHEET OF SHEETS STA. TO STA.		ILLINOIS	FED. AID PROJECT		