EXISTING TYPICAL CROSS SECTION (2)

STATION	TO	STATION
(1) 28+40.61 RT.		19+80.61 RT. (3)
(1) 24+80.61 LT.		19+80.61 LT. (3)

*TRANSISTION FROM 4.0%± SUPER ELEVATION TO 1.5%± NORMAL CROWN

RT. PASSING LANE STA 21+25.23 TO STA 18+75.23
RT. DRIVING LANE STA 21+25.23 TO STA 19+75.23
LT. DRIVING LANE STA 21+25.23 TO STA 18+75.23
LT. PASSING LANE STA 21+25.23 TO STA 19+75.23

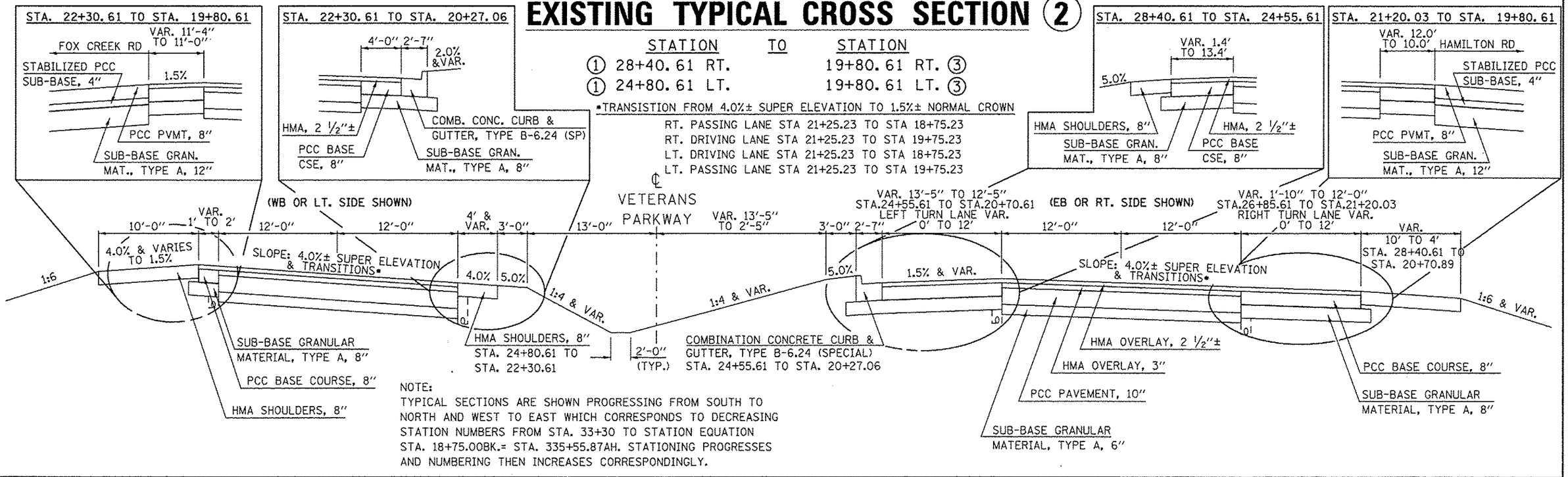

NOTE:
TYPICAL SECTIONS ARE SHOWN PROGRESSING FROM SOUTH TO NORTH AND WEST TO EAST WHICH CORRESPONDS TO DECREASING STATION NUMBERS FROM STA. 33+30 TO STATION EQUATION STA. 18+75.00BK.= STA. 335+55.87AH. STATIONING PROGRESSES AND NUMBERING THEN INCREASES CORRESPONDINGLY.

PROPOSED TYPICAL CROSS SECTION (2)

STATION	TO	STATION
(1) 28+40.61 RT.		19+80.61 RT. (3)
(1) 24+80.61 LT.		19+80.61 LT. (3)

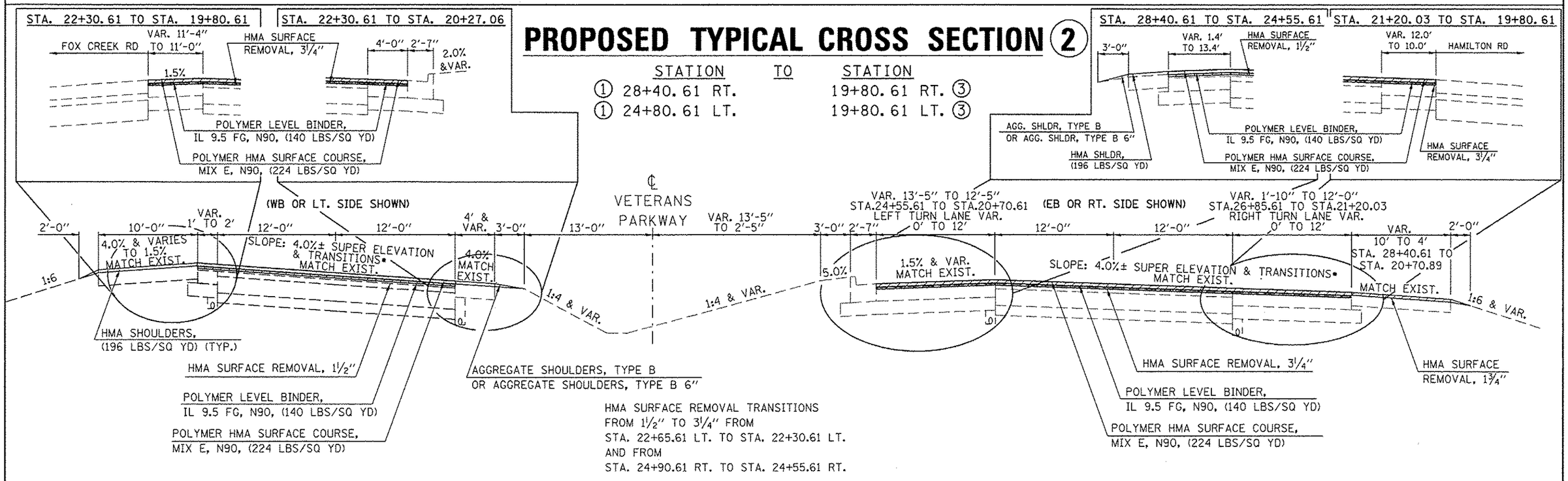

FILE NAME = c:\pw_work\pwidot\dodgoms\d0267571\D570838-sht-Typicals.dgn	USER NAME = dodgoms	DESIGNED -	REVISED -
	PLOT SCALE = 48.0000 ' / in.	DRAWN -	REVISED -
	PLOT DATE = 6/11/2014	CHECKED -	REVISED -
		DATE -	REVISED -

STATE OF ILLINOIS
DEPARTMENT OF TRANSPORTATION

TYPICAL CROSS SECTOINS

SCALE: | SHEET NO. 2 OF 12 SHEETS | STA. | TO STA.

F.A.P. RTE.	SECTION	COUNTY	TOTAL SHEETS	SHEET NO.
704	(57-7)RS-1&1RS-3	McLean	273	18

CONTRACT NO. 70838

ILLINOIS FED. AID PROJECT