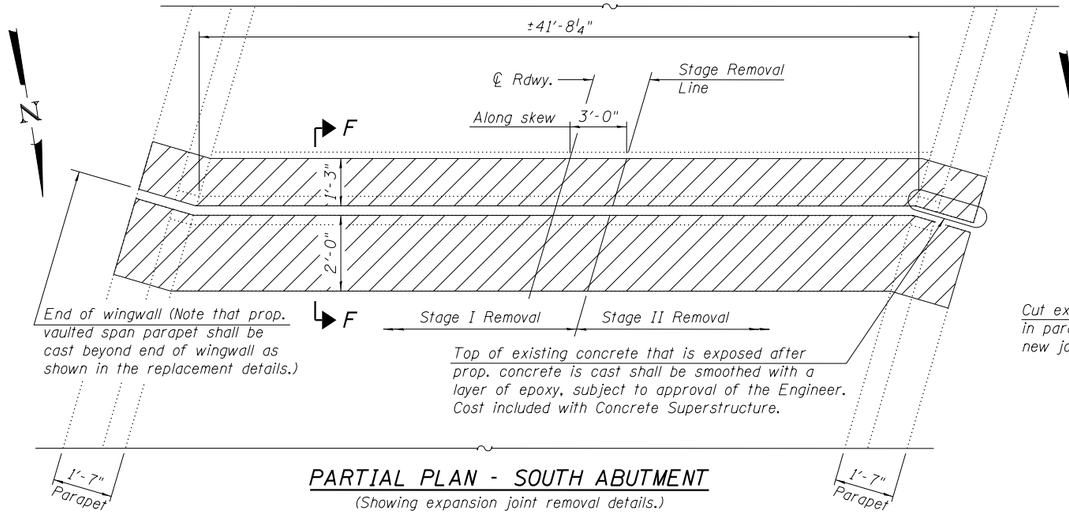

PARTIAL PLAN - SOUTH ABUTMENT

(Showing expansion joint removal details.)

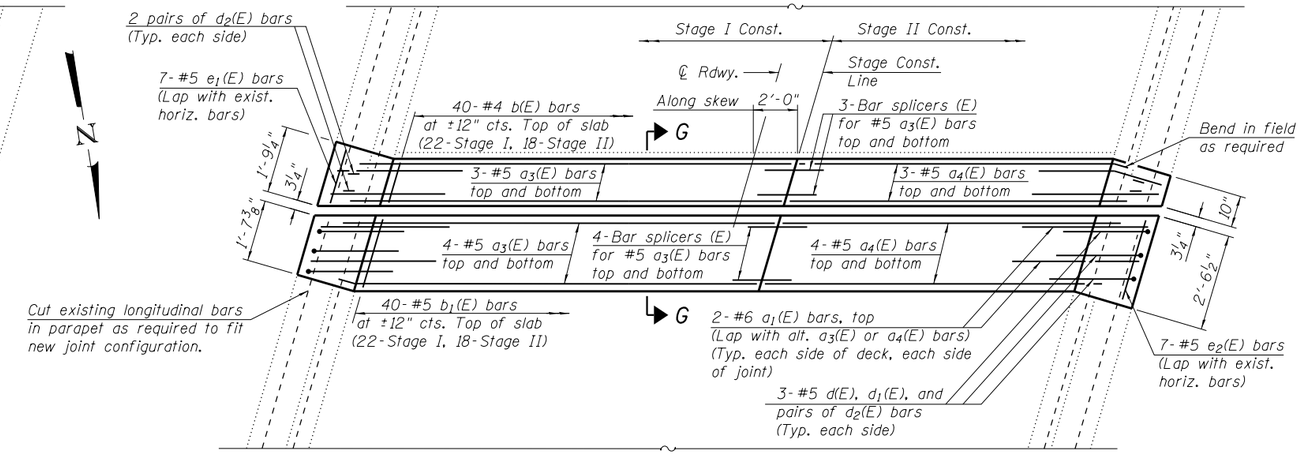

PARTIAL PLAN - SOUTH ABUTMENT

(Showing expansion joint replacement details.)

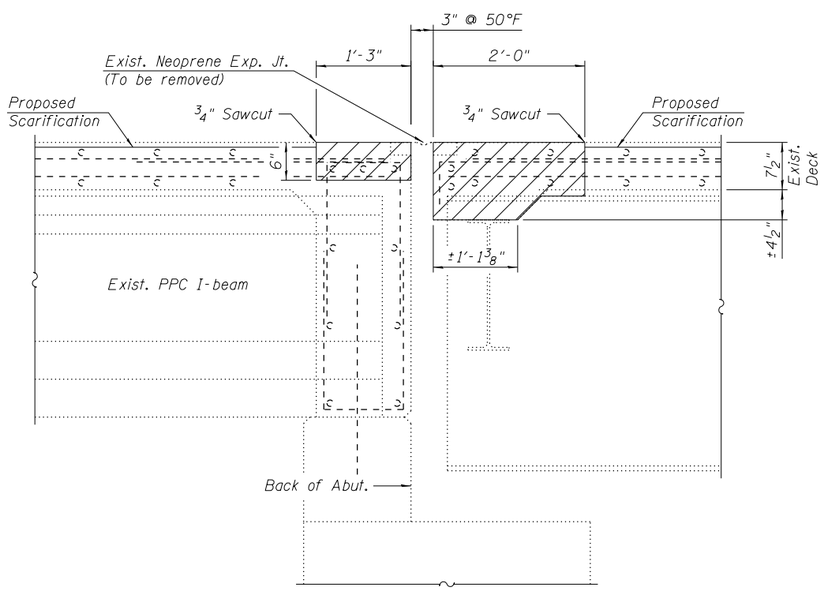

SECTION F-F

(Dimensions at Rt. L's to back of abut.)

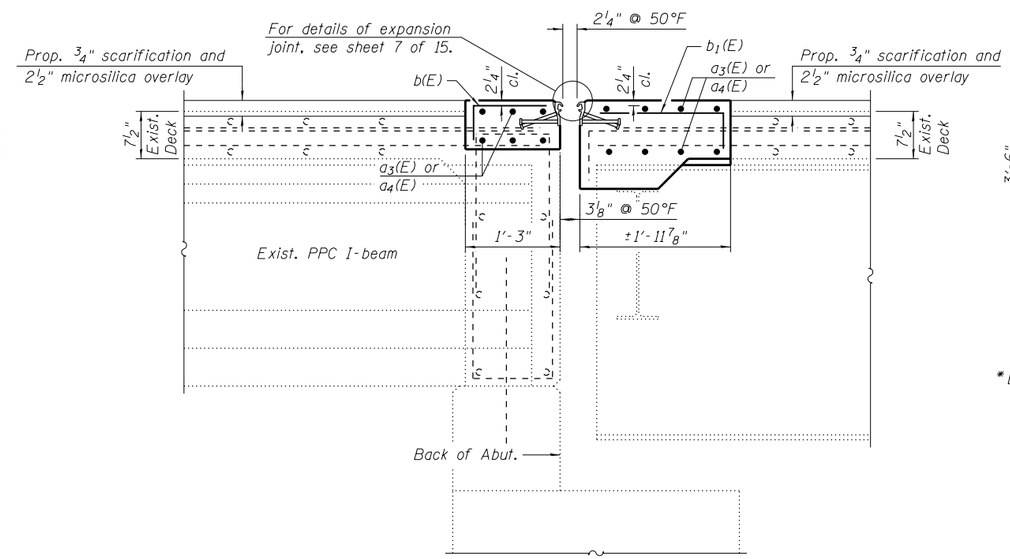

SECTION G-G

(Dimensions at Rt. L's to back of abut.)

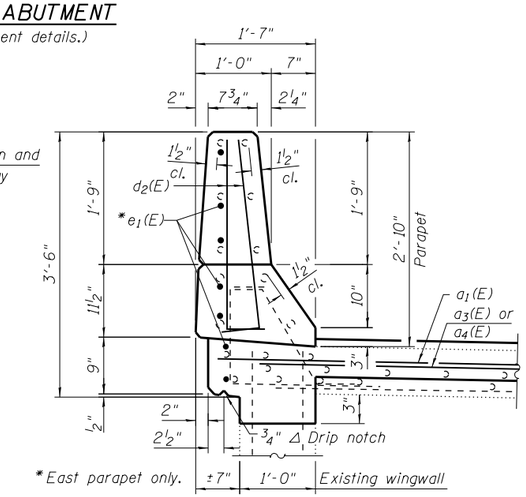

SECTION THRU VAULTED SPAN PARAPET

(Details for bridge parapet similar to the section on sheet 4 of 15).

Notes:

1. Hatched area indicates Concrete Removal.
2. Removal and disposal of existing neoprene expansion joint shall be included with the cost of Concrete Removal.
3. Existing reinforcement extending into the removal area shall be cleaned, straightened, and incorporated into the new construction. Any existing reinforcement bars intended for reuse and damaged during the concrete removal operations shall be repaired or replaced using an approved bar splicer or anchorage system to the satisfaction of the Engineer. Cost included with Concrete Removal.
4. Joint openings shall be adjusted according to Article 520.04 of the Standard Specifications when the deck is poured at an ambient temperature other than 50°F.
5. b(E) and b1(E) bar bends shall utilize the radius permitted for stirrups.

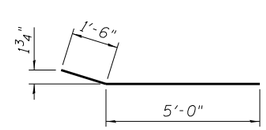

BAR a1(E)

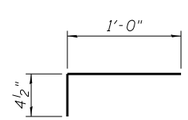

BAR b(E)

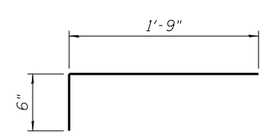

BAR b1(E)

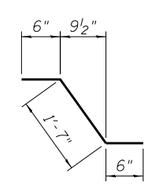

BAR d(E)

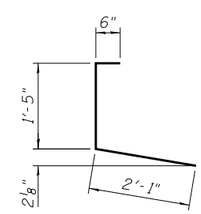

BAR d1(E)

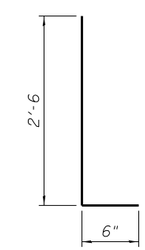

BAR d2(E)

BILL OF MATERIAL

Bar	No.	Size	Length	Shape
a1(E)	8	#6	6'-6"	
a3(E)	14	#5	23'-9"	
a4(E)	14	#5	19'-9"	
b(E)	40	#4	1'-5"	
b1(E)	40	#5	2'-3"	
d(E)	6	#5	2'-7"	
d1(E)	6	#5	4'-0'	
d2(E)	20	#5	3'-0'	
e1(E)	7	#5	1'-6"	
e2(E)	7	#5	2'-4"	
Concrete Removal			Cu. Yd.	4.6
Concrete Superstructure			Cu. Yd.	5.4
Reinforcement Bars, Epoxy Coated			Pound	980
Bar Splicers			Each	14