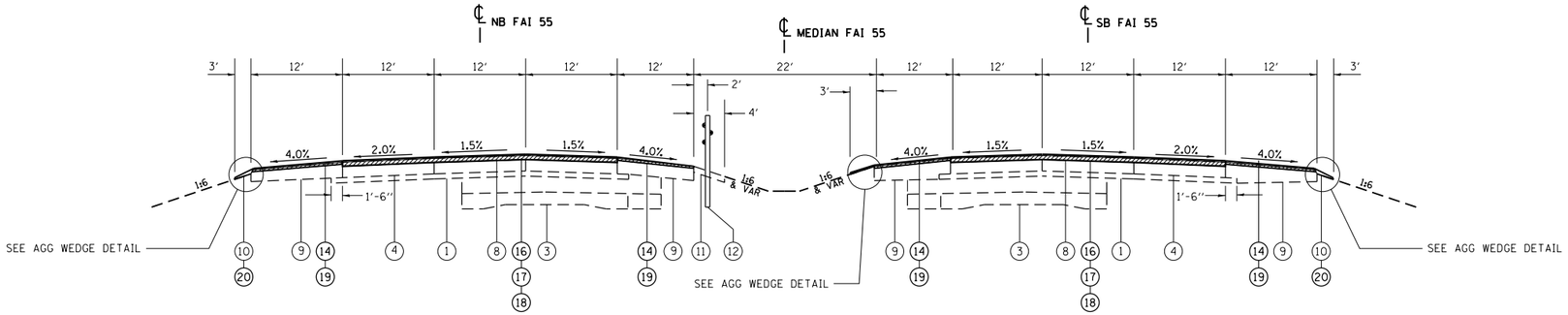

NB STA 0+19.78 TO STA 0+00.00
STA EQN STA 0+00.00 BK = 167+19.74 AH
NB STA 167+19.74 TO STA 236+00.55
NB STA 244+99.50 TO STA 252+22.87

FAI-55 LOCATION B

SB STA 8+22.30 TO STA 0+00.00
STA EQN STA 0+00.00 BK = 167+19.74 AH
SB STA 167+19.74 TO STA 236+98.98
SB STA 244+60.13 TO STA 253+11.12

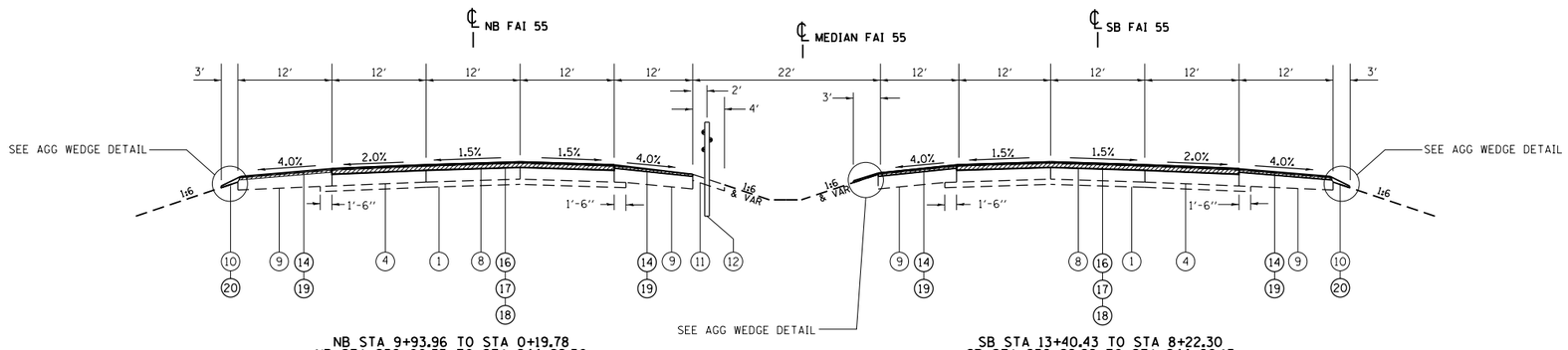

NB STA 9+93.96 TO STA 0+19.78
NB STA 236+00.55 TO STA 244+99.50

FAI-55 LOCATION B

SB STA 13+40.43 TO STA 8+22.30
SB STA 236+98.98 TO STA 244+60.13

LEGEND

1 EXIST. STABILIZED SUB-BASE, 4″
2 EXIST. SUB-BASE GRANULAR MATERIAL
3 EXIST. BURIED PAVEMENT
4 EXIST. CRC PAVEMENT, 8″
5 EXIST. PCC PAVEMENT, 8″
6 EXIST. CRC PAVEMENT, 11 1/2″
7 EXIST HMA OVERLAY, 2 1/2″
8 EXIST HMA OVERLAY, 3 1/4″
9 EXIST. HMA SHOULDER, 8″
10 EXIST. AGGREGATE SHOULDER
11 EXIST. BIT SHOULDERS SUPERPAVE, 4″
12 EXIST. CABLE BARRIER
13 PROP. HMA SURFACE REMOVAL, 3/4″
14 PROP. HMA SURFACE REMOVAL, 1 1/2″
15 PROP. HMA SURFACE REMOVAL, 2 1/2″
16 PROP. HMA SURFACE REMOVAL, 3 1/4″
17 PROP. POLY HMA BINDER COURSE IL 19.0, FG, N90, 2 1/4″
18 PROP. POLY HMA SURFACE COURSE MIX 'E' N90, 1 1/2″
19 PROP. HMA SURFACE COURSE MIX 'C' N50, 2″
20 PROP. AGGREGATE WEDGE SHOULDER, TYPE B

AGG WEDGE DETAIL

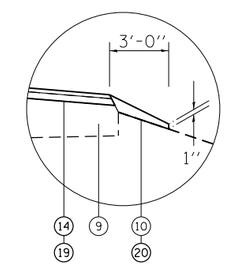

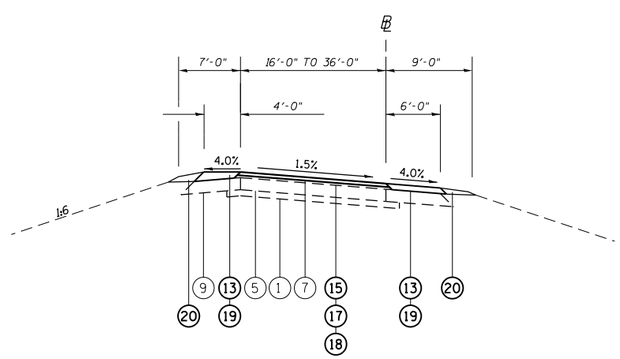

TYPICAL RAMP
TORONTO RD INTERCHANGE (TANGENT)

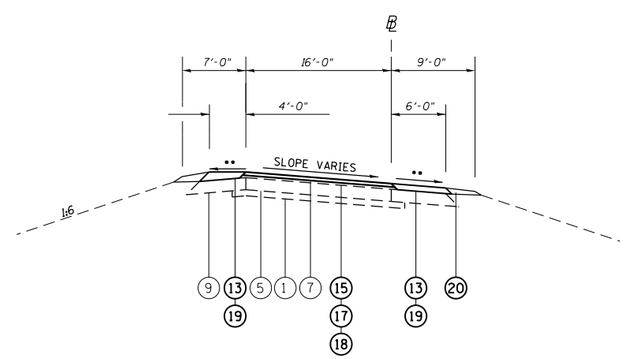

TYPICAL RAMP
TORONTO RD INTERCHANGE (SUPER ELEVATION)

•• WHEN THE SUPERELEVATION RATE OF PAVEMENT IS BETWEEN 0.0% AND 4.0%, THE SHOULDER SLOPE SHALL BE SLOPED AT 4.0%. WHEN THE SUPERELEVATION RATE OF PAVEMENT EXCEEDS 4.0%, THE SHOULDER SHALL BE SLOPED SO THAT THE ALGEBRAIC DIFFERENCE BETWEEN THE PAVEMENT AND SHOULDER IS 8.0% FOR THE HIGH SIDE OF THE SE, AND MATCH THE SE FOR THE LOW SIDE.

FILE NAME = c:\pw_work\pwidot\sparksgw\d0351843\D672G47-sht-typical.dgn	USER NAME = sparksgw	DESIGNED -	REVISED -	STATE OF ILLINOIS DEPARTMENT OF TRANSPORTATION	I-55 MAINLINE TYPICAL SECTION	F.A.I. RTE. 55	SECTION (84-4-1)RS-5	COUNTY SANGAMON	TOTAL SHEETS 39 / SHEET NO. 10
	PLOT SCALE = 50.0000 ' / in.	DRAWN -	REVISED -					CONTRACT NO. 72G47	
Default	PLOT DATE = Aug-15-2014 10:52:06AM	CHECKED -	REVISED -		SCALE: SHEET OF SHEETS STA. TO STA.	ILLINOIS FED. AID PROJECT			
		DATE -	REVISED -						