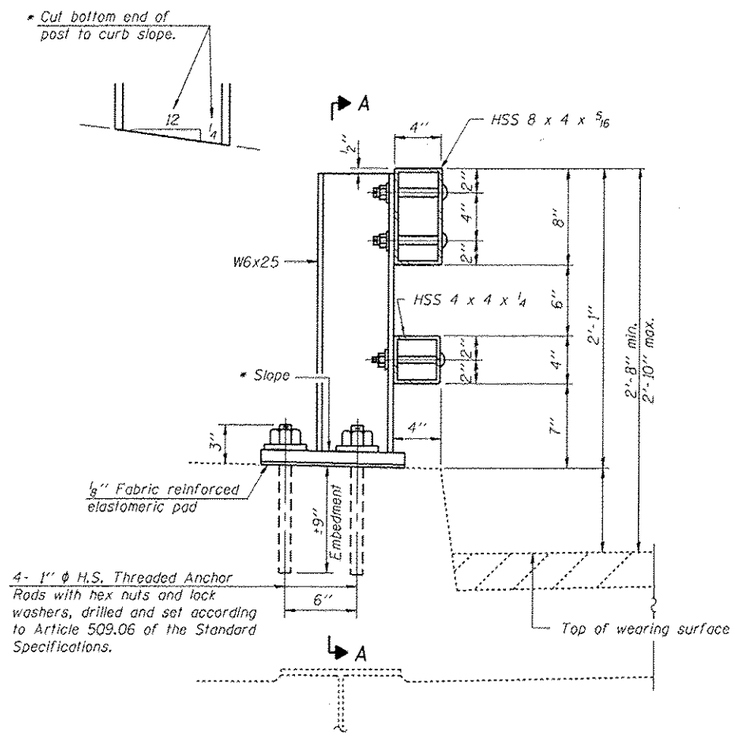

SECTION AT RAIL POST

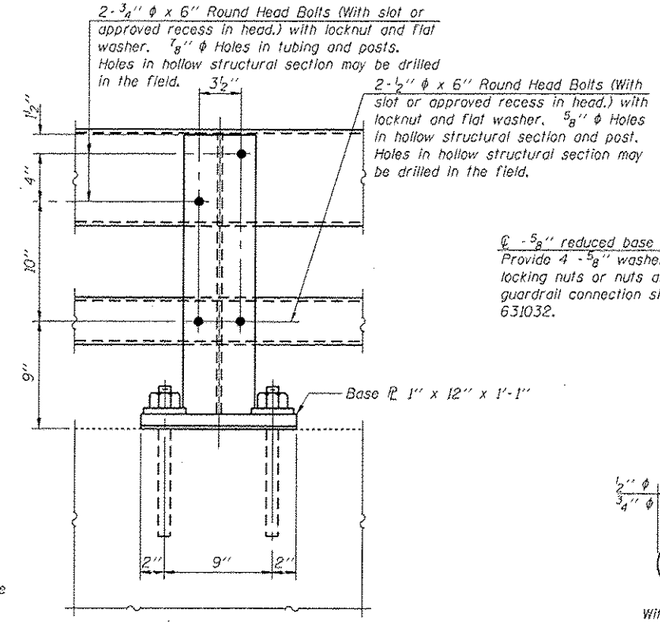

SECTION A-A

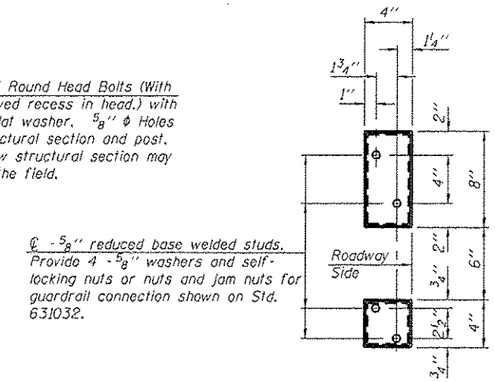

VIEW B-B

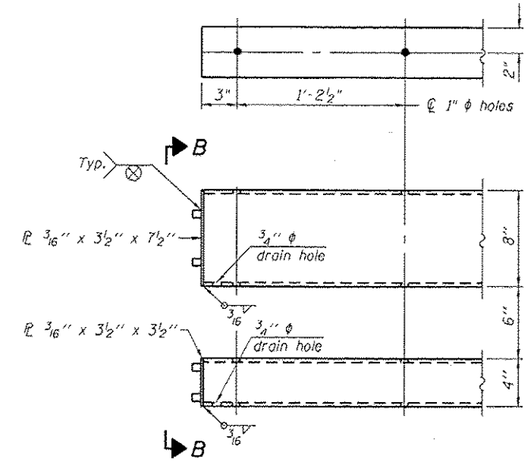

END OF RAIL DETAILS

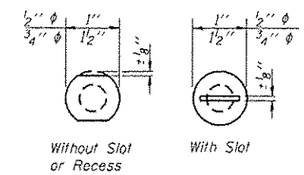

VIEW C-C

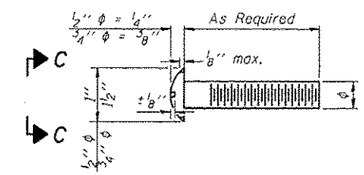

DETAIL OF 1/2" ϕ & 3/4" ϕ ROUND HEAD BOLTS

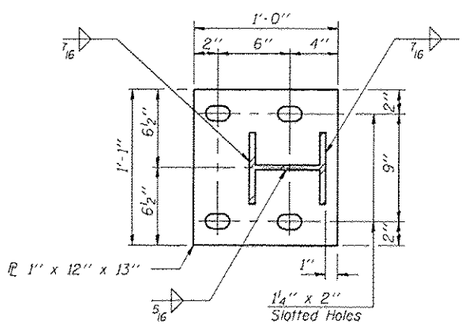

BASE PLATE DETAIL

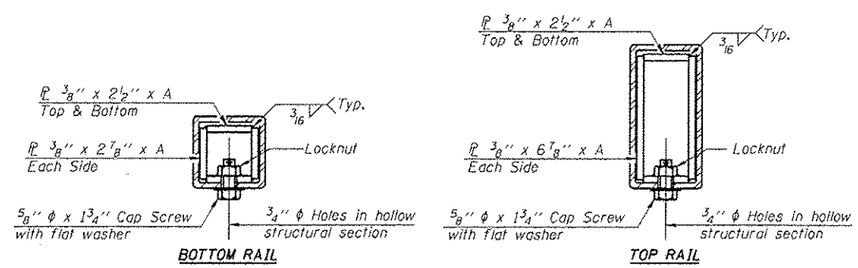

SECTIONS AT RAIL SPLICE

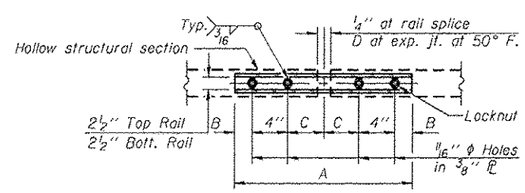

PLAN-BOTT. SPLICE PL TYPICAL

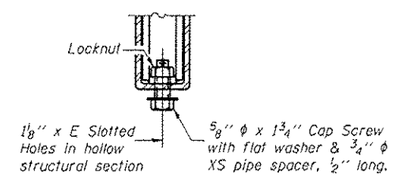

RAIL SPLICE CONNECTION AT EXPANSION JT.

(6'-3" Maximum Post Spacing)

Notes:

All field drilled holes shall be coated with an approved zinc rich paint before erection.

Posts shall not be located closer than 1'-3" to an existing bridge expansion joint or end of bridge.

Steel Bridge Rail expansion joint shall be provided between any two (2) posts which span a bridge expansion joint. Bolts located at expansion joint shall be provided with locknuts and shall be tightened only to a point that will allow railing movement.

Provide one 1/8" and two 1/16" steel shims for 25% of the posts. Shims shall be similar to base plates in size and holes.

All steel rail elements shall be galvanized according to Article 509.05 of the Standard Specifications.

SPLICE DIMENSIONS

T	D	A	B	C	E
≤4"	2 1/2"	1'-8"	2"	4"	2 1/2"
>4" ≤6 1/2"	3 3/4"	2'-0"	2 1/2"	5 1/2"	3 1/2"
>6 1/2" ≤9"	5"	2'-4"	3 1/2"	6 1/2"	9"
>9" ≤13"	7"	2'-10"	4 1/2"	8 1/2"	11"
Rail Splice	1/4"	1'-8"	2"	4"	—

T = Total movement at expansion joint as shown on the design plans.

BILL OF MATERIAL

Item	Unit	Quantity
Steel Railing, Type 2399	Foot	440

R-31 7-1-10

FILE NAME =	USER NAME = steffenmk	DESIGNED -	REVISED -
o:\pw_work\pwidot\steffenmk\d0401616\D74638-sht-details.dgn		DRAWN -	REVISED -
	PLOT SCALE = 100.0000 ' / in.	CHECKED -	REVISED -
Default	PLOT DATE = 9/8/2014	DATE -	REVISED -

STATE OF ILLINOIS
DEPARTMENT OF TRANSPORTATION

STEEL RAILING, TYPE 2399
STRUCTURE NO. 025-0060

SCALE: N/A | SHEET 1 OF 1 SHEETS | STA. TO STA.

F.A.P. RTE.	SECTION	COUNTY	TOTAL SHEETS	SHEET NO.
57	(25-6,7)RS-2	EFFINGHAM	63	49E

CONTRACT NO. 74638

ILLINOIS FED. AID PROJECT