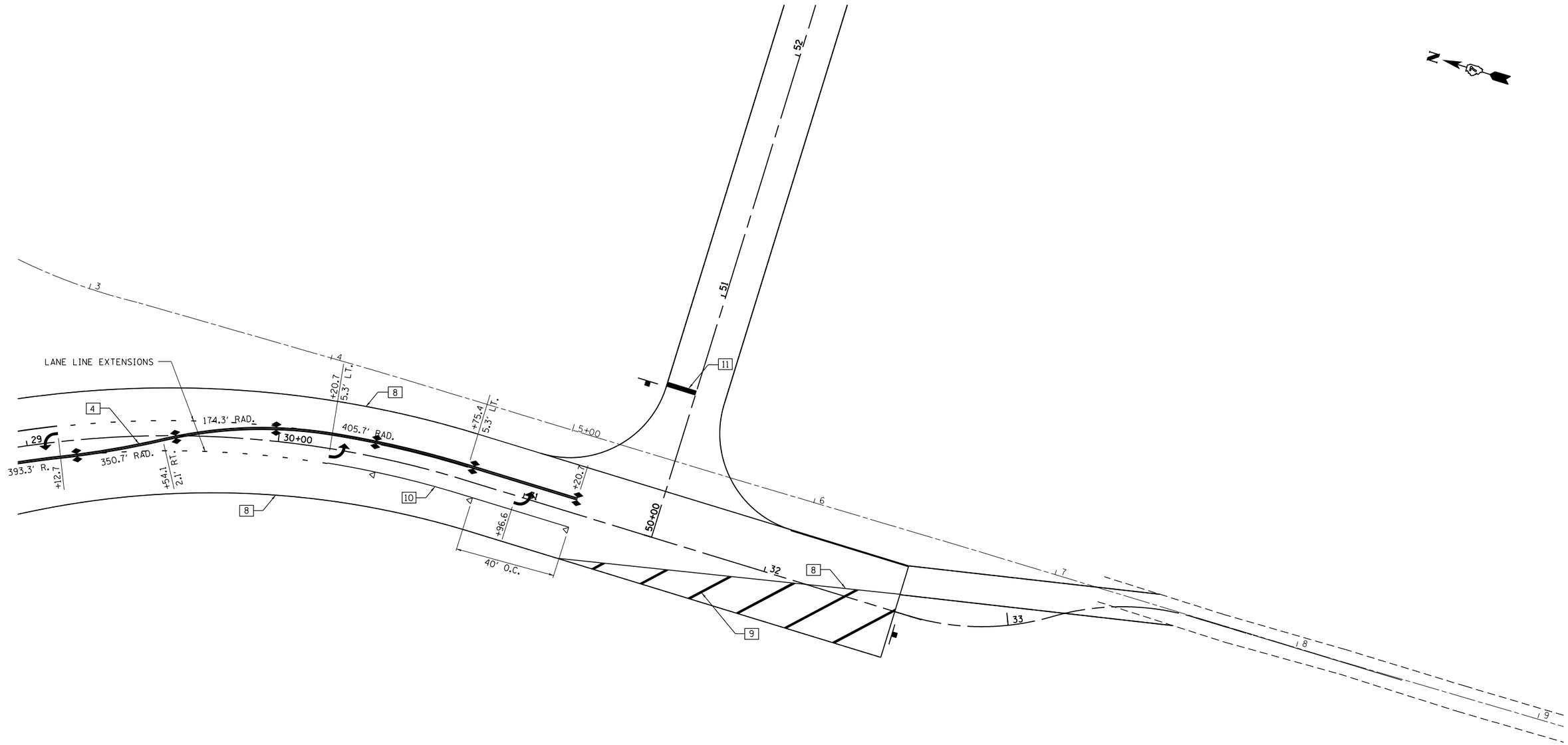

PAVEMENT MARKING LEGEND

1. 4" (100) SKIP-DASH (YELLOW)
2. 4" (100) SOLID (YELLOW)
3. 12" (300) DIAGONAL (YELLOW)
4. 4" (100) DOUBLE YELLOW (NARROW)
5. 12" (300) SOLID WHITE
6. RESERVED
7. 6" (150) SKIP-DASH (WHITE)
8. 4" (100) SOLID (WHITE)
9. 12" (300) DIAGONAL (WHITE)
10. 6" (150) SOLID (WHITE)
11. 24" (600) STOP BAR (WHITE)
12. 8" (200) SOLID (WHITE)
13. 4" (100) PARKING WHITE

TYPICAL PAVEMENT MARKERS LEGEND

- ◆ TWO-WAY AMBER MARKER
- ▶ ONE-WAY AMBER MARKER
- ▷ ONE-WAY CRYSTAL MARKER

FILE NAME = c:\pw_work\pwidot\steffenmk\d0158776\D774423-sht-striping.dgn	USER NAME = steffenmk	DESIGNED -	REVISED -
		DRAWN -	REVISED -
	PLOT SCALE = 40.0000 ' / in.	CHECKED -	REVISED -
Default	PLOT DATE = 5/7/2014	DATE -	REVISED -

STATE OF ILLINOIS
DEPARTMENT OF TRANSPORTATION

STRIPING PLAN
E. HARRISON AVE. (A)

SCALE: 20 | SHEET 9 OF 10 SHEETS | STA. 29+00 TO STA. 9+00

F.A.P. RTE.	SECTION	COUNTY	TOTAL SHEETS	SHEET NO.
91	5N	COLES	271	101

CONTRACT NO. 74423

ILLINOIS FED. AID PROJECT

PAVEMENT MARKING LEGEND

1. 4'' (100) SKIP-DASH (YELLOW)
2. 4'' (100) SOLID (YELLOW)
3. 12'' (300) DIAGONAL (YELLOW)
4. 4'' (100) DOUBLE YELLOW (NARROW)
5. 12'' (300) SOLID WHITE
6. RESERVED
7. 6'' (150) SKIP-DASH (WHITE)
8. 4'' (100) SOLID (WHITE)
9. 12'' (300) DIAGONAL (WHITE)
10. 6'' (150) SOLID (WHITE)
11. 24'' (600) STOP BAR (WHITE)
12. 8'' (200) SOLID (WHITE)
13. 4'' (100) PARKING WHITE

TYPICAL PAVEMENT MARKERS LEGEND

- ◆ TWO-WAY AMBER MARKER
- ▶ ONE-WAY AMBER MARKER
- ▷ ONE-WAY CRYSTAL MARKER

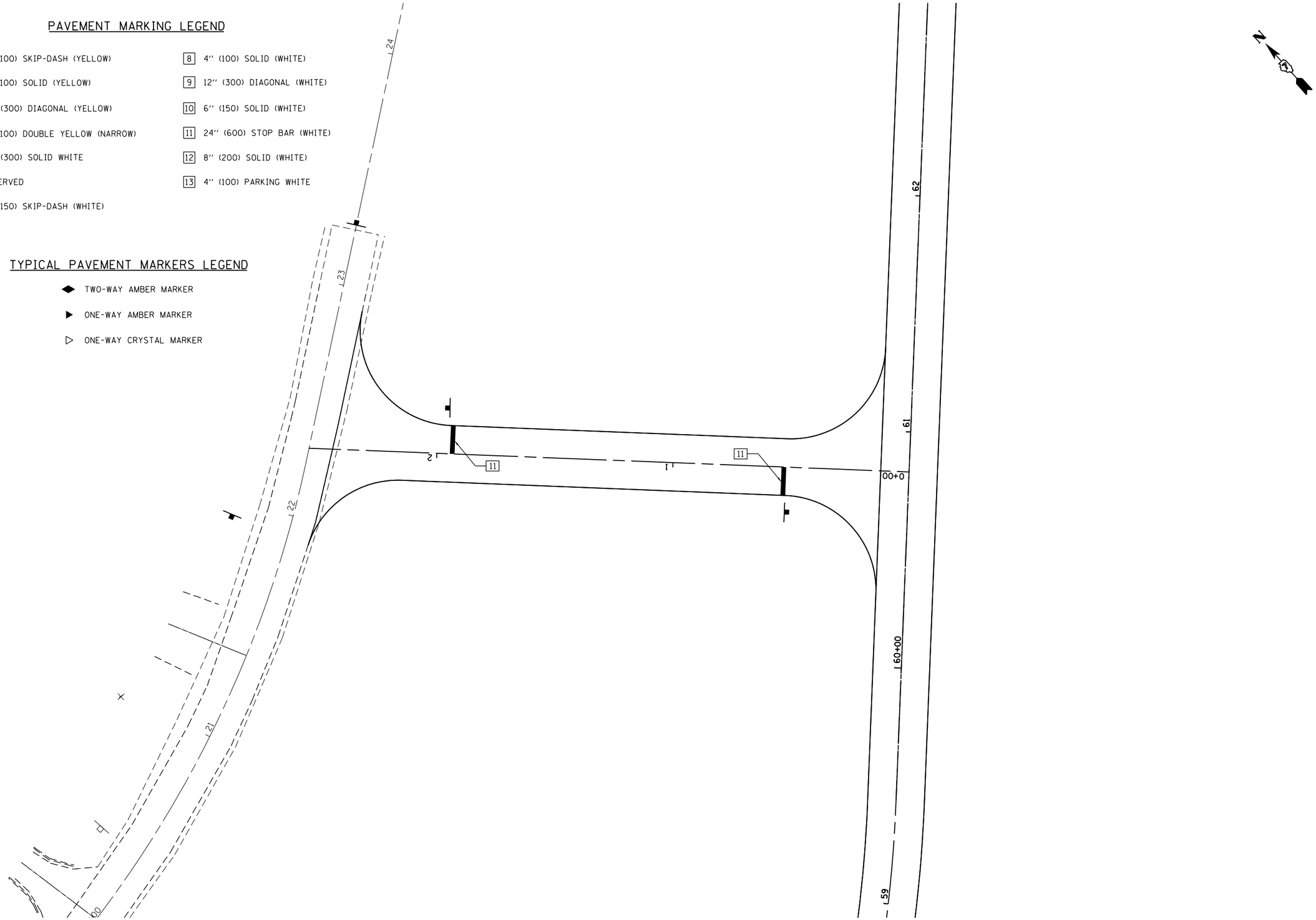

FILE NAME =	USER NAME = steffenmk	DESIGNED -	REVISED -	STATE OF ILLINOIS DEPARTMENT OF TRANSPORTATION	STRIPING PLAN CONNECTOR RD.	F.A.P. RTE.	SECTION	COUNTY	TOTAL SHEETS	SHEET NO.
c:\pw_work\pwidot\steffenmk\d0158776\D774423-sht-striping.dgn		DRAWN -	REVISED -			91	5N	COLES	271	102
	PLOT SCALE = 40.0000 ' / in.	CHECKED -	REVISED -					CONTRACT NO. 74423		
Default	PLOT DATE = 5/7/2014	DATE -	REVISED -		SCALE: 20 SHEET 10 OF 10 SHEETS STA. 0+00 TO STA. 2+54.12		ILLINOIS	FED. AID PROJECT		

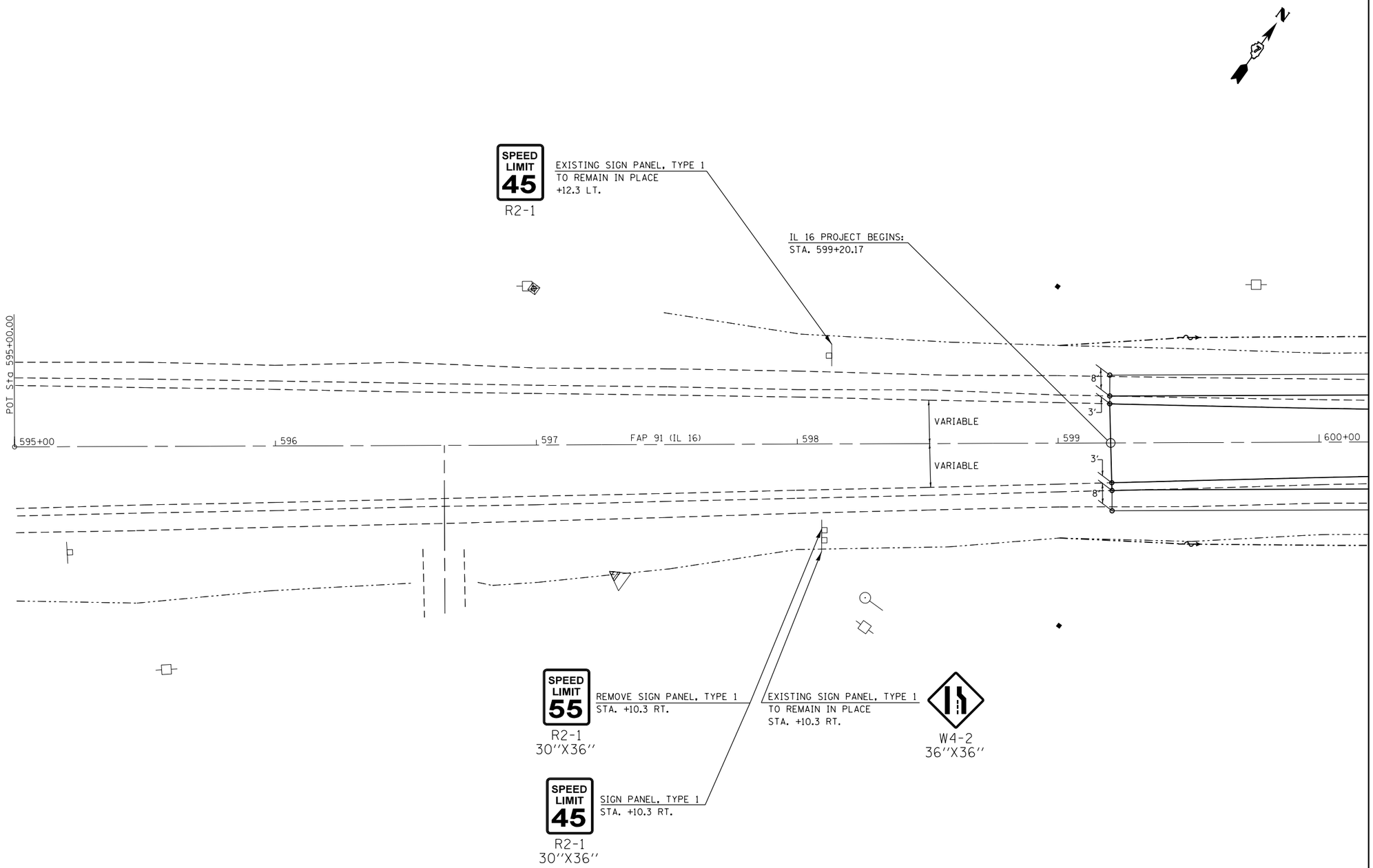

FILE NAME =	USER NAME = steffenmk	DESIGNED -	REVISED -	STATE OF ILLINOIS DEPARTMENT OF TRANSPORTATION	SIGNING PLAN IL. RTE. 16	F.A.P. RTE.	SECTION	COUNTY	TOTAL SHEETS	SHEET NO.
c:\pw_work\pwidot\steffenmk\d0158776\D774423-sht-signing.dgn		DRAWN -	REVISED -			91	5N	Coles	271	103
	PLOT SCALE = 40.0000 ' / in.	CHECKED -	REVISED -					CONTRACT NO. 74423		
	PLOT DATE = 5/7/2014	DATE -	REVISED -		SCALE: 20 SHEET 1 OF 15 SHEETS STA. 599+20.17 TO STA. 600+00			ILLINOIS FED. AID PROJECT		

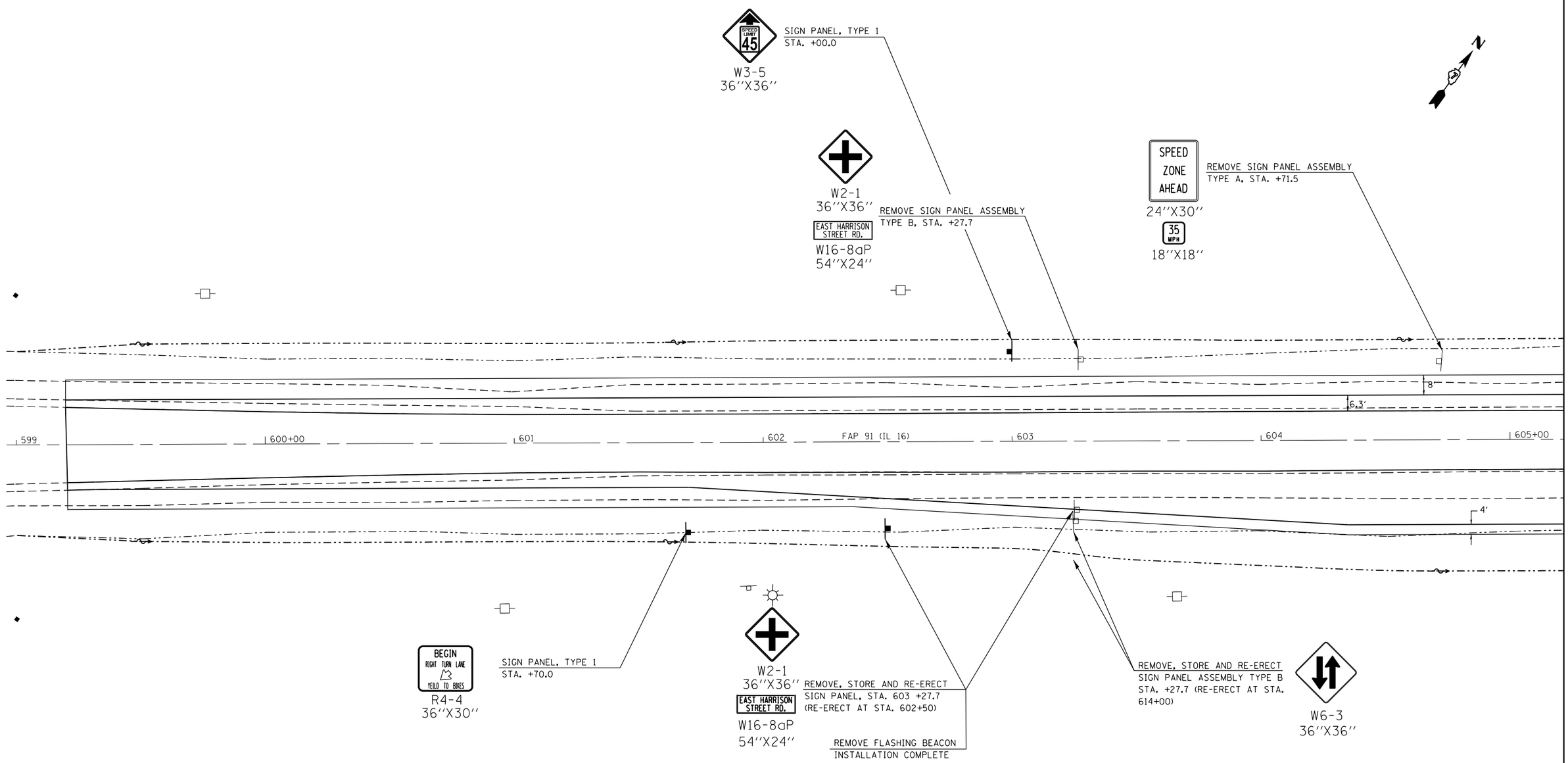

FILE NAME =	USER NAME = steffenmk	DESIGNED -	REVISED -	STATE OF ILLINOIS DEPARTMENT OF TRANSPORTATION	SIGNING PLAN IL. RTE. 16			F.A.P. RTE.	SECTION	COUNTY	TOTAL SHEETS / SHEET NO.
c:\pw_work\pwidot\steffenmk\d0158776\D774423-sht-signing.dgn		DRAWN -	REVISED -					91	5N	Coles	271 / 104
	PLOT SCALE = 40.0000 ' / in.	CHECKED -	REVISED -							CONTRACT NO. 74423	
	PLOT DATE = 5/7/2014	DATE -	REVISED -		SCALE: 20	SHEET 2 OF 15 SHEETS	STA. 599+00 TO STA. 605+00		ILLINOIS	FED. AID PROJECT	

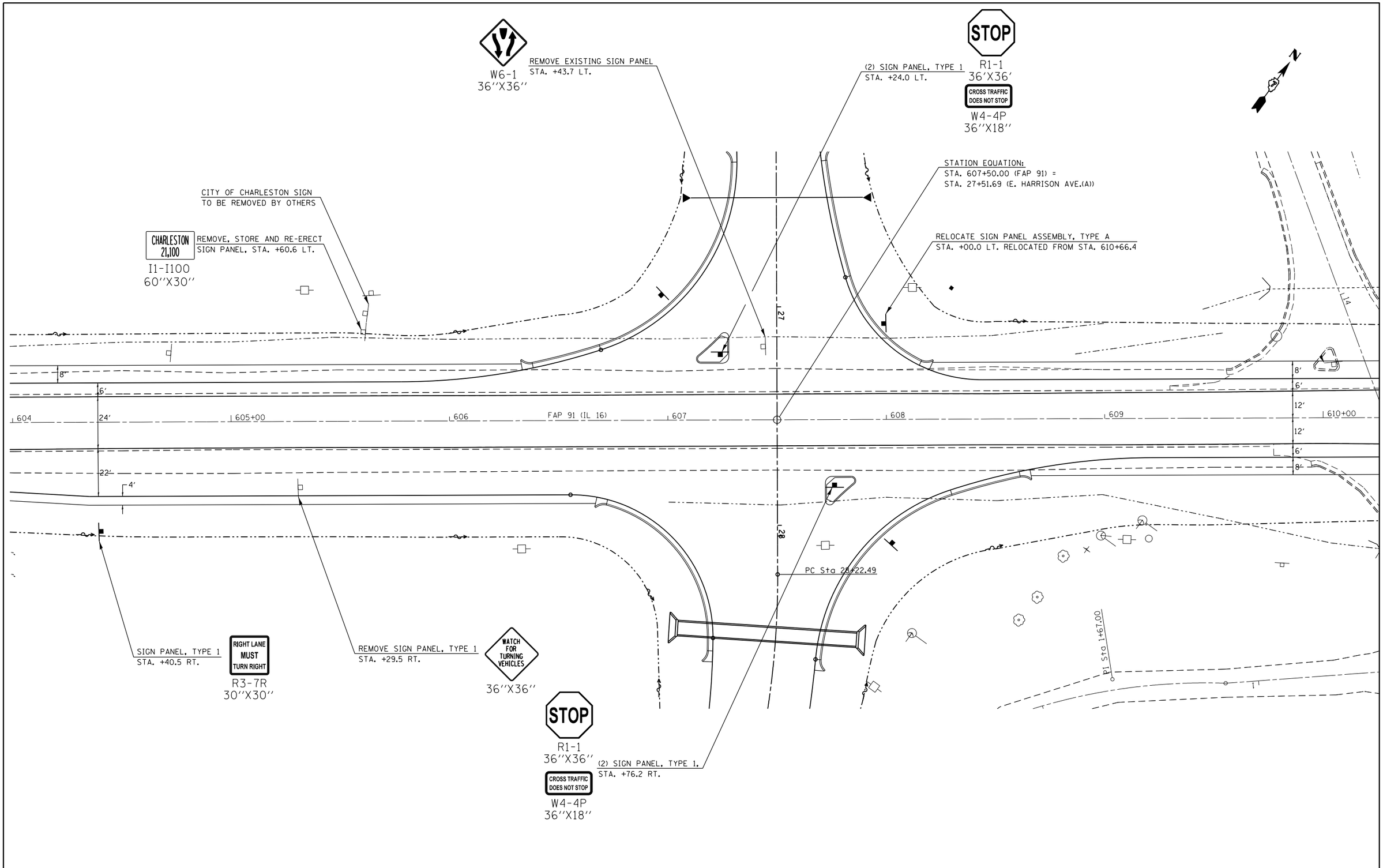

FILE NAME = c:\pw_work\pwidot\steffenmk\d0158776\D774423-sht-signing.dgn	USER NAME = steffenmk	DESIGNED -	REVISED -	STATE OF ILLINOIS DEPARTMENT OF TRANSPORTATION
		DRAWN -	REVISED -	
	PLOT SCALE = 40.0000 ' / in.	CHECKED -	REVISED -	
	PLOT DATE = 5/7/2014	DATE -	REVISED -	

SIGNING PLAN
IL. RTE. 16

SCALE: 20 | SHEET 3 OF 15 SHEETS | STA. 604+00 TO STA. 610+00

F.A.P. RTE.	SECTION	COUNTY	TOTAL SHEETS	SHEET NO.
91	5N	Coles	271	105

CONTRACT NO. 74423

ILLINOIS FED. AID PROJECT

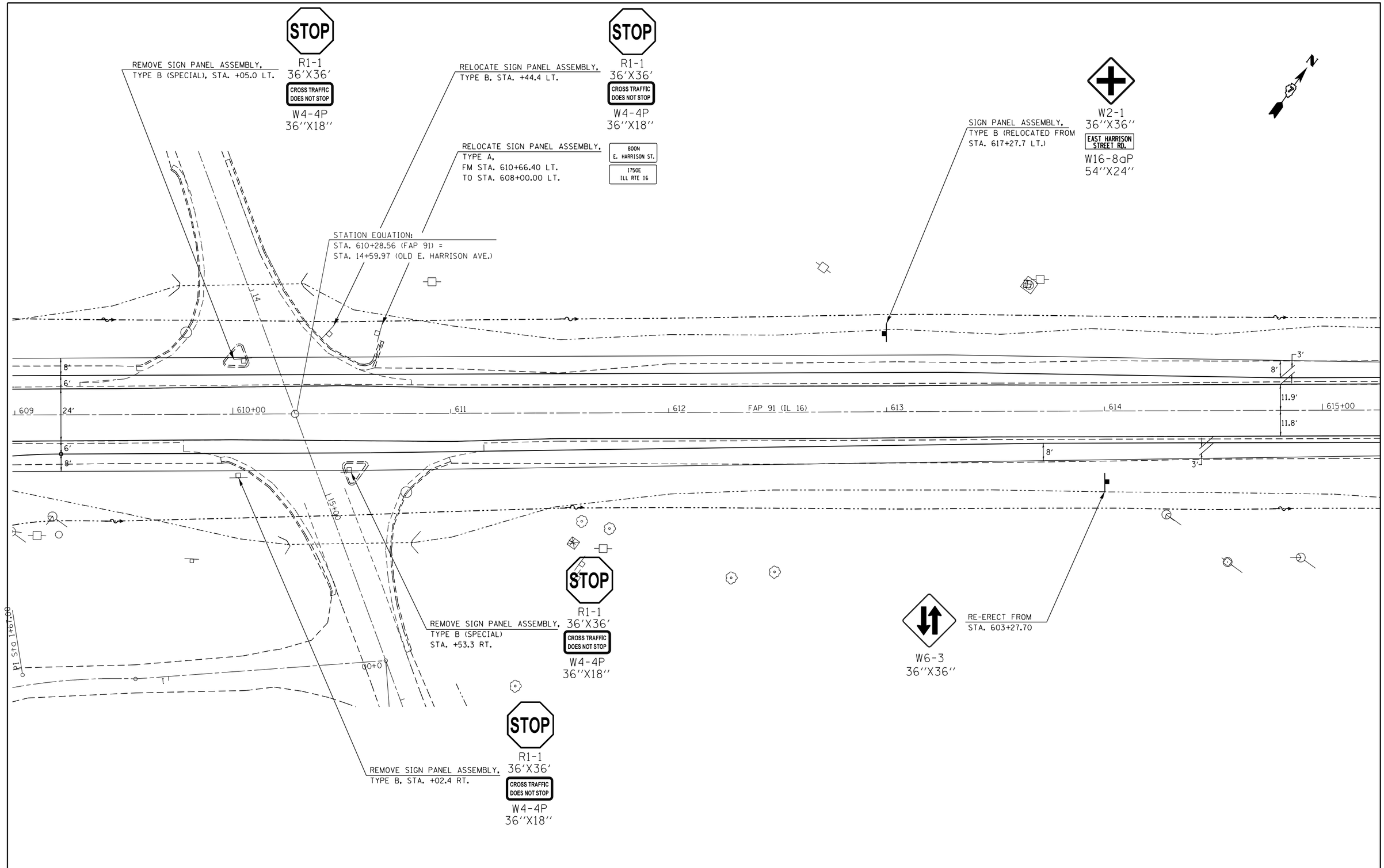

FILE NAME = c:\pw_work\pwidot\steffenmk\d0158776\D774423-sht-signing.dgn	USER NAME = steffenmk	DESIGNED -	REVISED -	STATE OF ILLINOIS DEPARTMENT OF TRANSPORTATION	SIGNING PLAN IL. RTE. 16			F.A.P. RTE.	SECTION	COUNTY	TOTAL SHEETS	SHEET NO.
		DRAWN -	REVISED -					91	5N	Coles	271	106
	PLOT SCALE = 40.0000 ' / in.	CHECKED -	REVISED -					CONTRACT NO. 74423				
	PLOT DATE = 5/7/2014	DATE -	REVISED -		SCALE: 20	SHEET 4 OF 15 SHEETS	STA. 609+00 TO STA. 615+00	ILLINOIS FED. AID PROJECT				

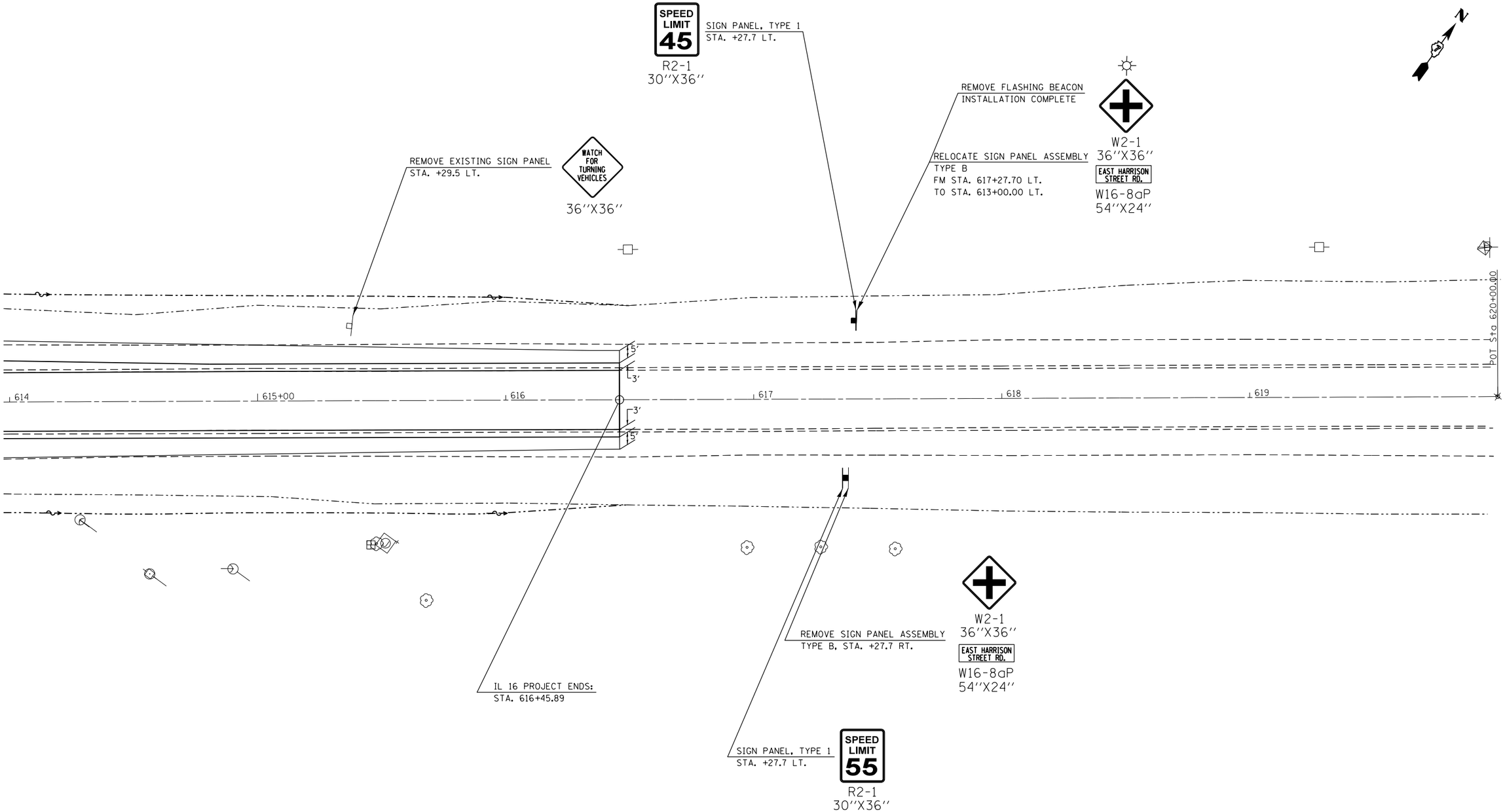

FILE NAME =	USER NAME = steffenmk	DESIGNED -	REVISED -	STATE OF ILLINOIS DEPARTMENT OF TRANSPORTATION	SIGNING PLAN IL. RTE. 16			F.A.P. RTE.	SECTION	COUNTY	TOTAL SHEETS / SHEET NO.
c:\pw_work\pwidot\steffenmk\d0158776\D774423-sht-signing.dgn		DRAWN -	REVISED -					91	5N	Coles	271 / 107
	PLOT SCALE = 40.0000 ' / in.	CHECKED -	REVISED -							CONTRACT NO. 74423	
	PLOT DATE = 5/7/2014	DATE -	REVISED -		SCALE: 20	SHEET 5 OF 15 SHEETS	STA. 614+00 TO STA. 616+45.89			ILLINOIS FED. AID PROJECT	

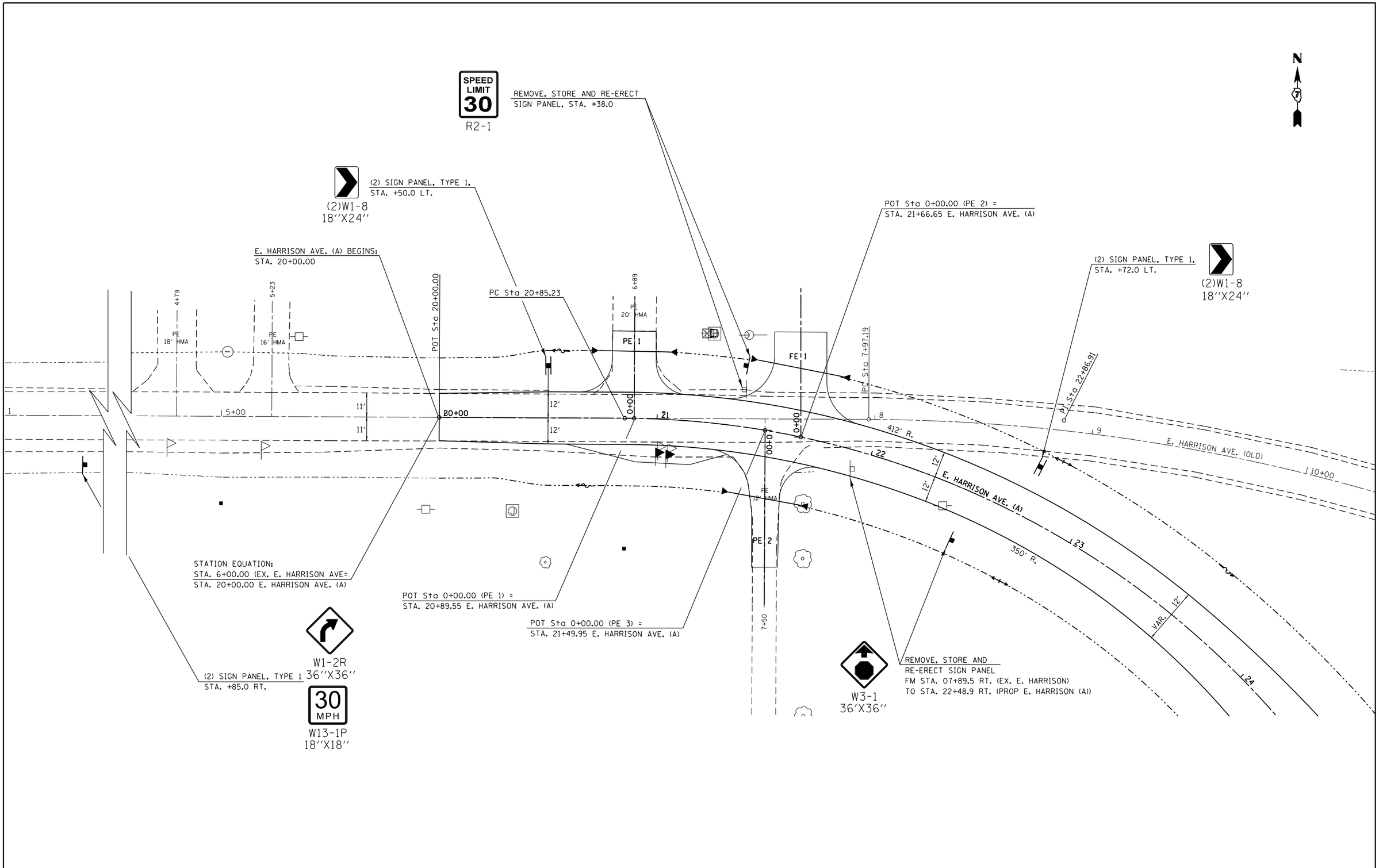

FILE NAME = c:\pw_work\pwidot\steffenmk\d0158776\D774423-sht-signing.dgn	USER NAME = steffenmk	DESIGNED -	REVISED -	STATE OF ILLINOIS DEPARTMENT OF TRANSPORTATION	SIGNING PLAN E. HARRISON AVE. (A)	F.A.P. RTE.	SECTION	COUNTY	TOTAL SHEETS	SHEET NO.
	PLOT SCALE = 40.0000 ' / in.	DRAWN -	REVISED -			91	5N	Coles	271	108
	PLOT DATE = 5/7/2014	CHECKED -	REVISED -			CONTRACT NO. 74423				
		DATE -	REVISED -		SCALE: 20 SHEET 6 OF 15 SHEETS STA. 20+00 TO STA. 24+00	ILLINOIS FED. AID PROJECT				

STOP
R1-1
36''X36''
CROSS TRAFFIC DOES NOT STOP
W4-4P
36'X18''

(2) SIGN PANEL, TYPE 1,
STA. +09.5 LT.

(2)W1-8
18''X24''

(2) SIGN PANEL, TYPE 1,
STA. 05.9 LT.

STATION EQUATION:
STA. 27+51.69 (E. HARRISON AVE. (A)=
STA. 607+50.00 (IL 16)
SEE SHEET FOR INTERSECTION DETAILS

E. HARRISON AVE. (OLD)
10+00
600' R.
412.0' R.
350' R.
65' R.
90' R.
12' VAR.
18'
18'
25+00
E. HARRISON AVE. (A)
24
26
27
28
29
23
PT Sta 24+58.83
608
607
FAP 91 (IL 16)
PC Sta 28+22.49
19'
VAR.

PROP. CURVE C60
PI STA. = 22+86.91
Δ = 53° 30' 52'' (RT)
D = 14° 19' 26''
R = 400.00'
T = 201.68'
L = 373.60'
E = 47.97'
e = _____
T.R. = _____
S.E. RUN = _____
P.C. STA = 20+85.23
P.T. STA = 24+58.83

STOP
R1-1
36 X 36
CROSS TRAFFIC DOES NOT STOP
W4-4P
36''X18''

RELOCATED SIGN PANEL
ASSEMBLY, TYPE B
STA. +93.6 RT.

FILE NAME = c:\pw_work\pwidot\steffenmk\d0158776\D774423-sht-signing.dgn	USER NAME = steffenmk	DESIGNED -	REVISED -	STATE OF ILLINOIS DEPARTMENT OF TRANSPORTATION	SIGNING PLAN E. HARRISON AVE. (A)	F.A.P. RTE. 91	SECTION 5N	COUNTY Coles	TOTAL SHEETS 271	SHEET NO. 109
		DRAWN -	REVISED -					CONTRACT NO. 74423		
	PLOT SCALE = 40.0000 ' / in.	CHECKED -	REVISED -							
	PLOT DATE = 5/7/2014	DATE -	REVISED -		SCALE: 20 SHEET 7 OF 15 SHEETS STA. 23+00 TO STA. 29+00		ILLINOIS FED. AID PROJECT			

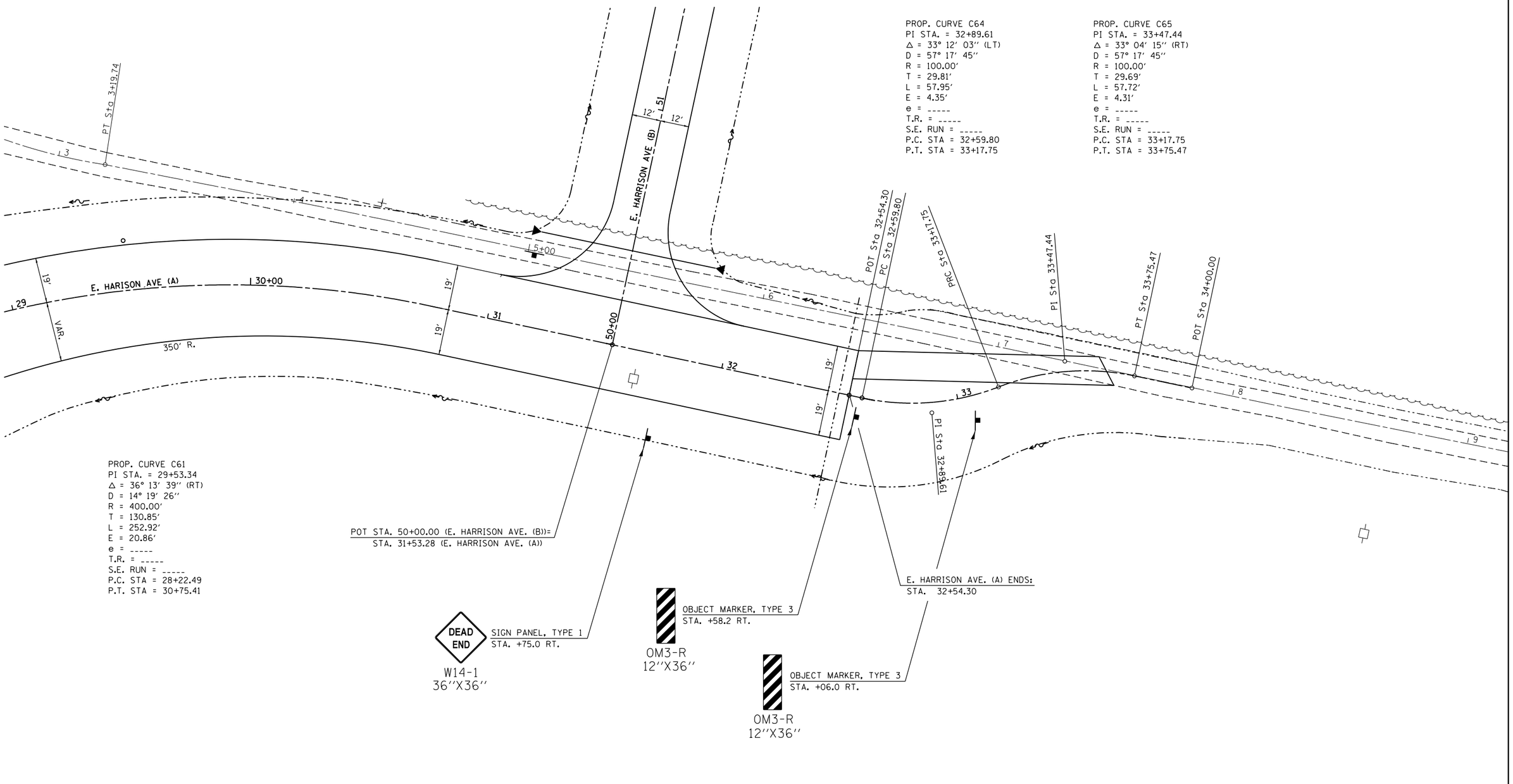

FILE NAME = c:\pw_work\pwidot\steffenmk\d0158776\D774423-sht-signing.dgn	USER NAME = steffenmk	DESIGNED -	REVISED -	STATE OF ILLINOIS DEPARTMENT OF TRANSPORTATION	SIGNING PLAN E. HARRISON AVE. (A)	F.A.P. RTE.	SECTION	COUNTY	TOTAL SHEETS	SHEET NO.
		DRAWN -	REVISED -			91	5N	Coles	271	110
	PLOT SCALE = 40.0000 ' / in.	CHECKED -	REVISED -			CONTRACT NO. 74423				
	PLOT DATE = 5/7/2014	DATE -	REVISED -		SCALE: 20 SHEET 8 OF 15 SHEETS STA. 29+00 TO STA. 34+00	ILLINOIS FED. AID PROJECT				

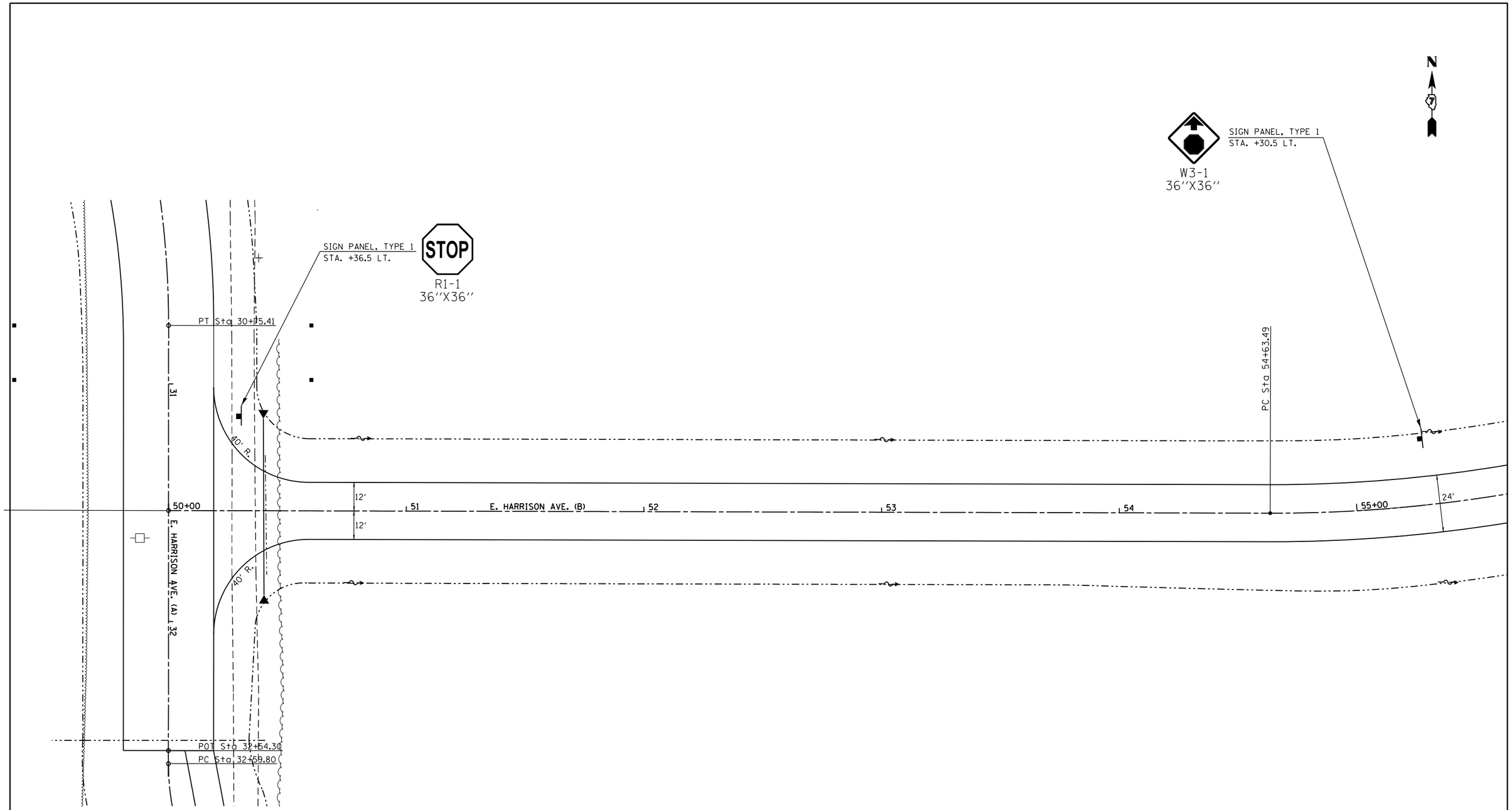

FILE NAME = c:\pw_work\pwidot\steffenmk\d0158776\D774423-sht-signing.dgn	USER NAME = steffenmk	DESIGNED -	REVISED -	STATE OF ILLINOIS DEPARTMENT OF TRANSPORTATION	SIGNING PLAN E. HARRISON AVE. (B)	F.A.P. RTE. 91	SECTION 5N	COUNTY Coles	TOTAL SHEETS 271	SHEET NO. 111
		DRAWN -	REVISED -					CONTRACT NO. 74423		
	PLOT SCALE = 40.0000 ' / in.	CHECKED -	REVISED -							
	PLOT DATE = 5/7/2014	DATE -	REVISED -		SCALE: 20 SHEET 9 OF 15 SHEETS STA. 50+00 TO STA. 55+00	ILLINOIS FED. AID PROJECT				

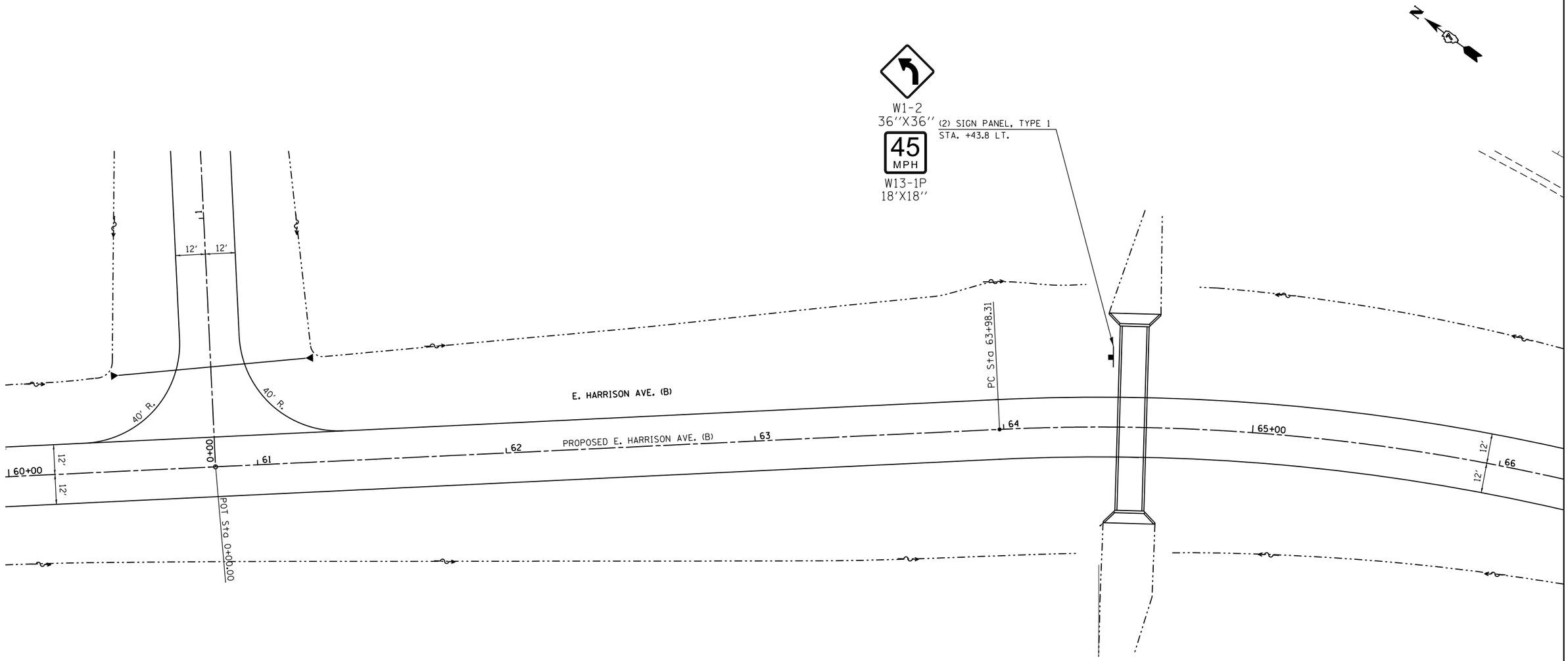

FILE NAME = c:\pw_work\pwidot\steffenmk\d0158776\D774423-sht-signing.dgn	USER NAME = steffenmk	DESIGNED -	REVISED -	STATE OF ILLINOIS DEPARTMENT OF TRANSPORTATION	SIGNING PLAN E. HARRISON AVE. (B)			F.A.P. RTE.	SECTION	COUNTY	TOTAL SHEETS / SHEET NO.
		DRAWN -	REVISED -					91	5N	Coles	271 / 112
	PLOT SCALE = 40.0000 ' / in.	CHECKED -	REVISED -							CONTRACT NO. 74423	
	PLOT DATE = 5/7/2014	DATE -	REVISED -		SCALE: 20	SHEET 10 OF 15 SHEETS	STA. 60+00 TO STA. 66+00		ILLINOIS	FED. AID PROJECT	

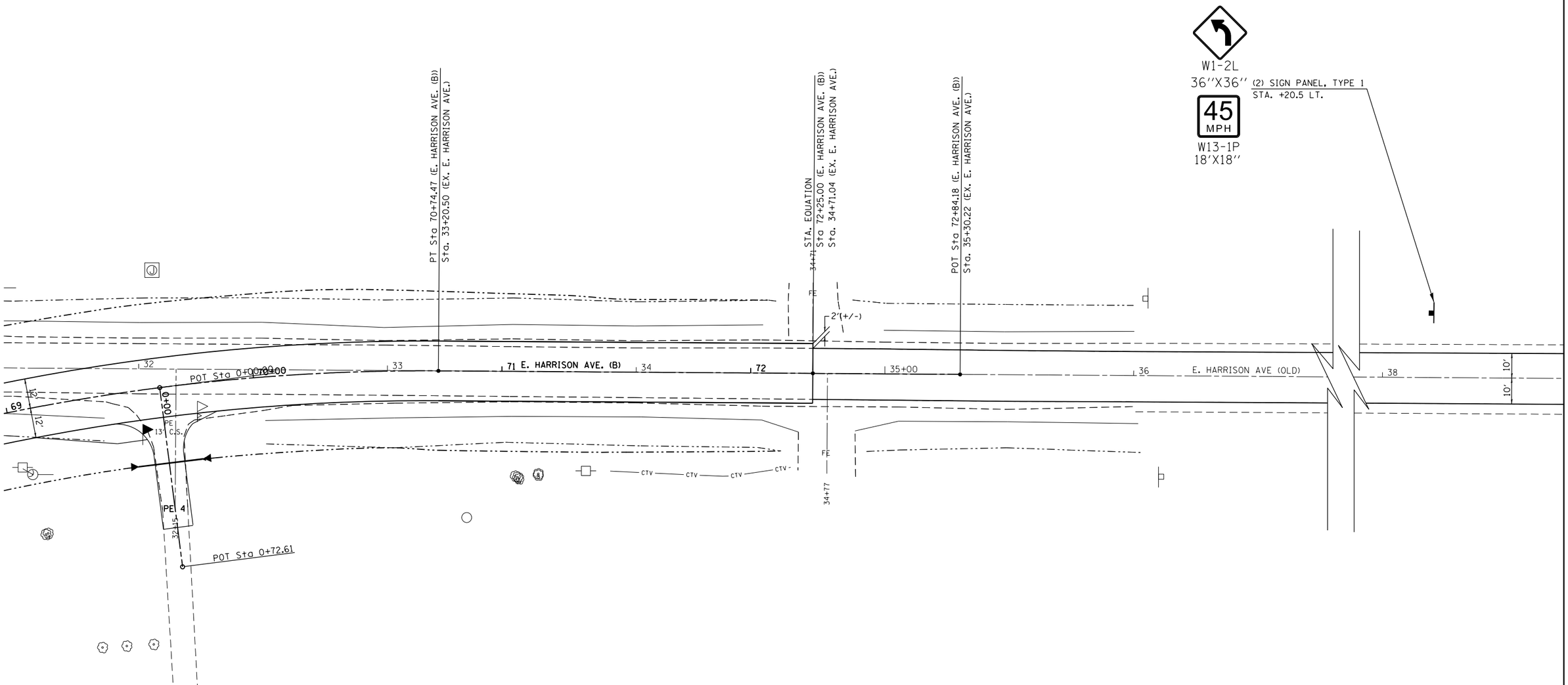

FILE NAME =	USER NAME = steffenmk	DESIGNED -	REVISED -	STATE OF ILLINOIS DEPARTMENT OF TRANSPORTATION	SIGNING PLAN E. HARRISON AVE. (B)	F.A.P. RTE.	SECTION	COUNTY	TOTAL SHEETS	SHEET NO.
c:\pw_work\pwidot\steffenmk\d0158776\D774423-sht-signing.dgn		DRAWN -	REVISED -			91	5N	Coles	271	113
	PLOT SCALE = 40.0000 ' / in.	CHECKED -	REVISED -					CONTRACT NO. 74423		
	PLOT DATE = 5/7/2014	DATE -	REVISED -		SCALE: 20 SHEET 11 OF 15 SHEETS STA. 69+00 TO STA. 72+84.18			ILLINOIS FED. AID PROJECT		

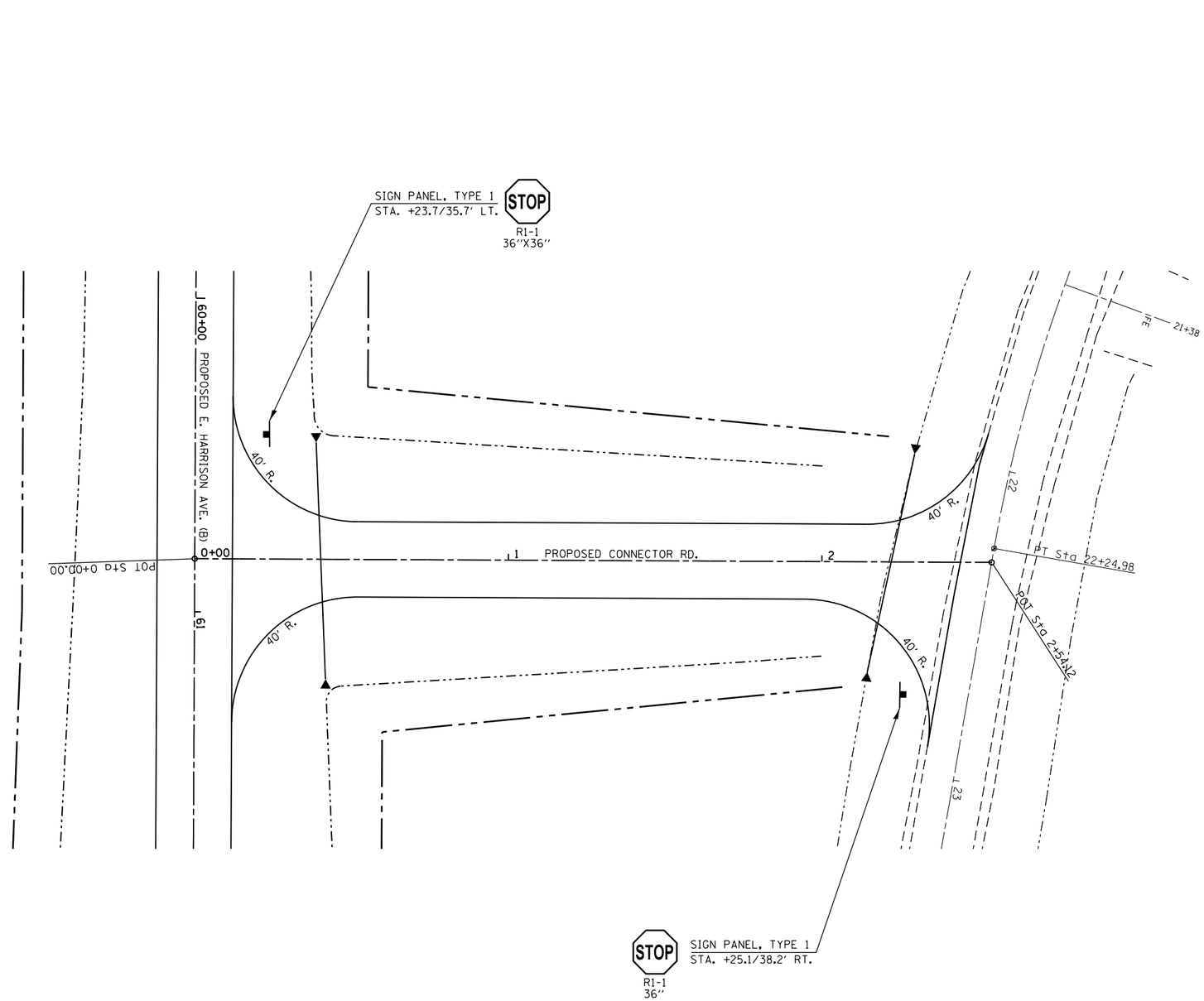

FILE NAME =	USER NAME = steffenmk	DESIGNED -	REVISED -	STATE OF ILLINOIS DEPARTMENT OF TRANSPORTATION	SIGNING PLAN CONNECTOR			F.A.P. RTE.	SECTION	COUNTY	TOTAL SHEETS	SHEET NO.
c:\pw_work\pwidot\steffenmk\d0158776\D774423-sht-signing.dgn		DRAWN -	REVISED -					91	5N	Coles	271	114
	PLOT SCALE = 40.0000 ' / in.	CHECKED -	REVISED -							CONTRACT NO. 74423		
	PLOT DATE = 5/7/2014	DATE -	REVISED -		SCALE: 20	SHEET 12 OF 15 SHEETS	STA. 0+00 TO STA. 2+54.12		ILLINOIS	FED. AID PROJECT		

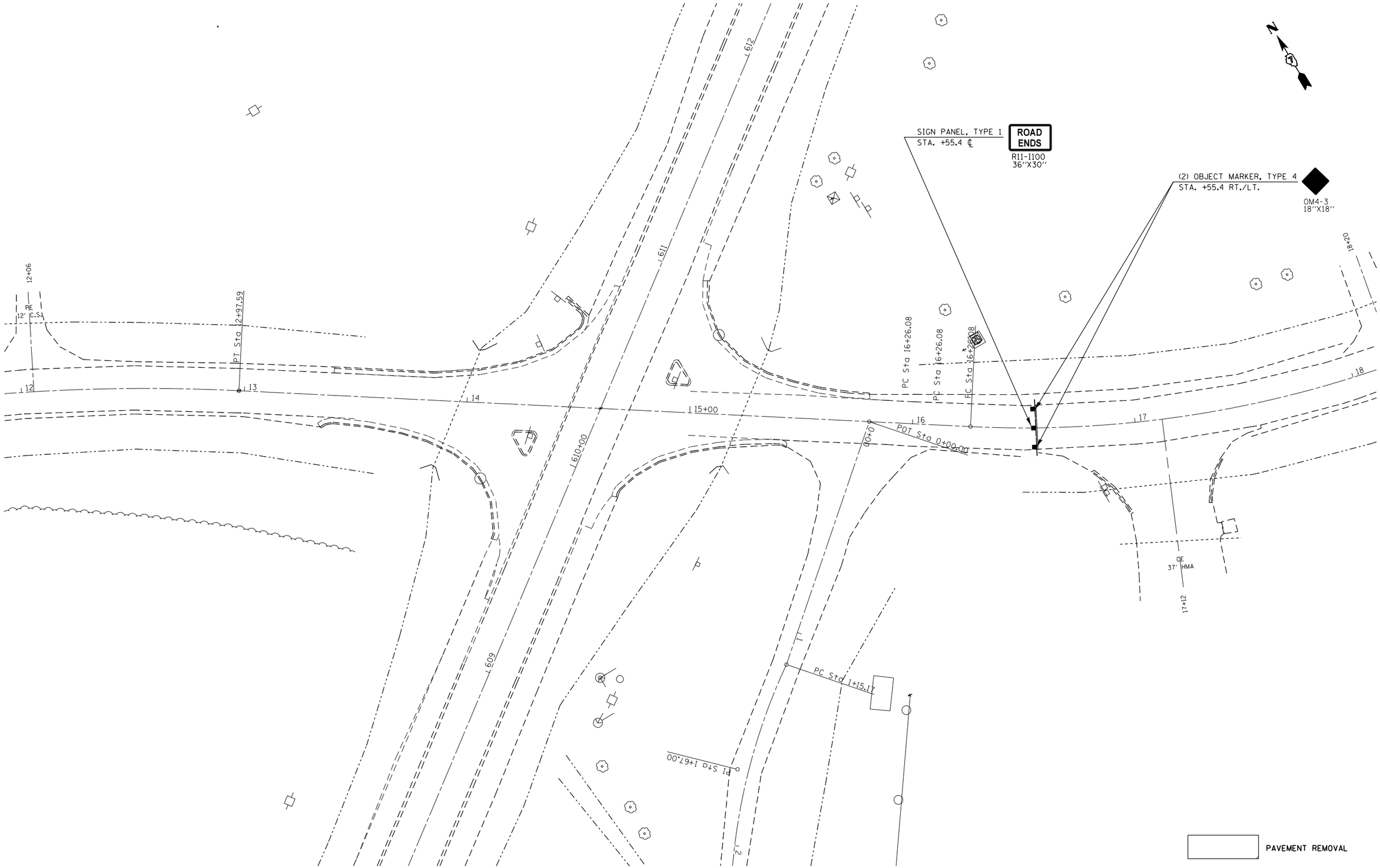

FILE NAME = c:\pw_work\pwidot\steffenmk\d0158776\D774423-sht-signing.dgn	USER NAME = steffenmk	DESIGNED -	REVISED -	STATE OF ILLINOIS DEPARTMENT OF TRANSPORTATION	SIGNING PLAN OLD EXISTING	F.A.P. RTE.	SECTION	COUNTY	TOTAL SHEETS / SHEET NO.
		DRAWN -	REVISED -			91	5N	Coles	271 / 115
	PLOT SCALE = 40.0000 ' / in.	CHECKED -	REVISED -					CONTRACT NO. 74423	
	PLOT DATE = 5/7/2014	DATE -	REVISED -		SCALE: 20 / SHEET 13 OF 15 SHEETS / STA. 12+00 TO STA. 18+00		ILLINOIS	FED. AID PROJECT	

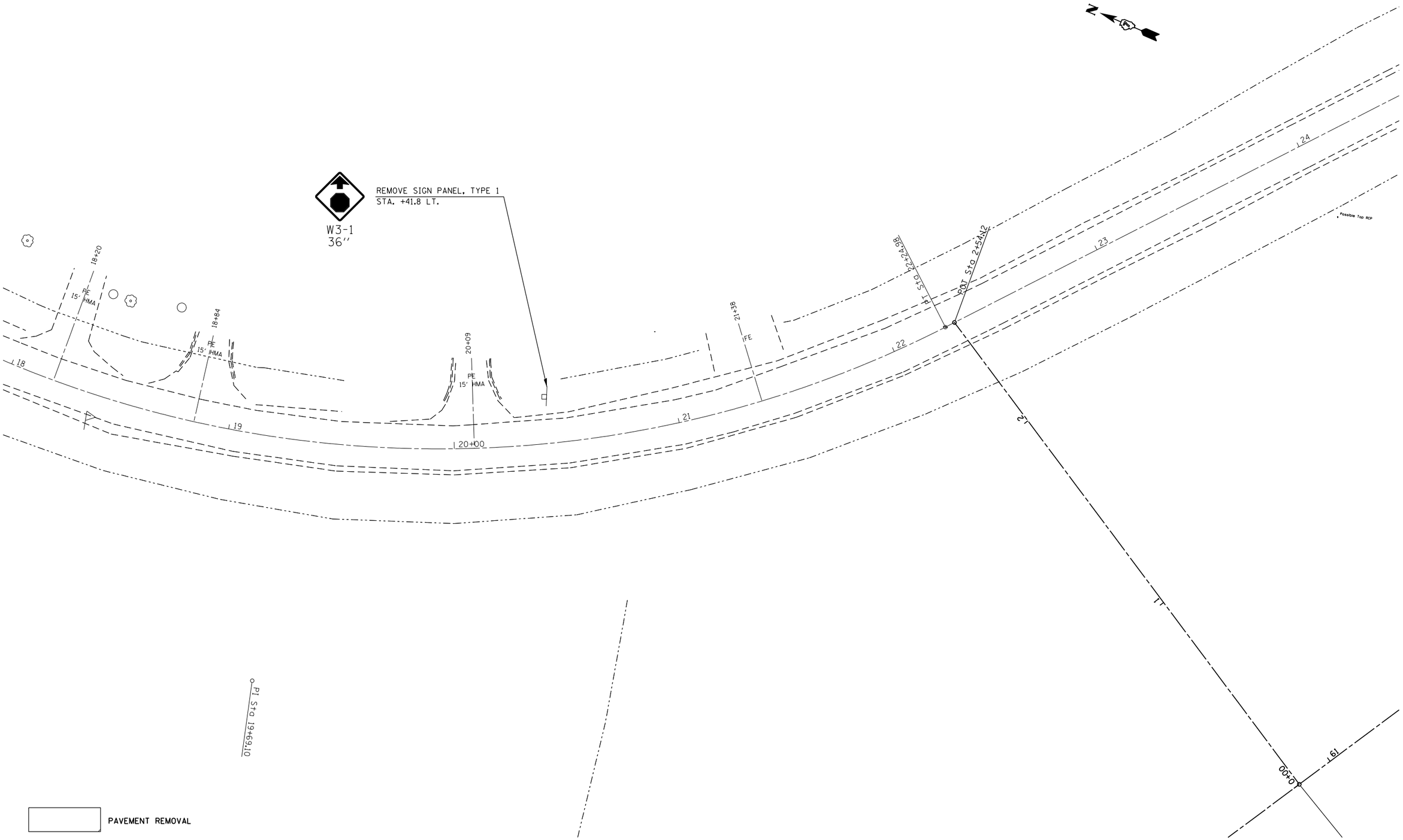

FILE NAME = c:\pw_work\pwidot\steffenmk\d0158776\D774423-sht-signing.dgn	USER NAME = steffenmk	DESIGNED -	REVISED -
		DRAWN -	REVISED -
	PLOT SCALE = 40.0000 ' / in.	CHECKED -	REVISED -
	PLOT DATE = 5/7/2014	DATE -	REVISED -

STATE OF ILLINOIS
DEPARTMENT OF TRANSPORTATION

SIGNING PLAN
OLD EXISTING

SCALE: 20 | SHEET 14 OF 15 SHEETS | STA. 18+00 TO STA. 24+00

F.A.P. RTE.	SECTION	COUNTY	TOTAL SHEETS	SHEET NO.
91	5N	Coles	271	116

CONTRACT NO. 74423

ILLINOIS FED. AID PROJECT

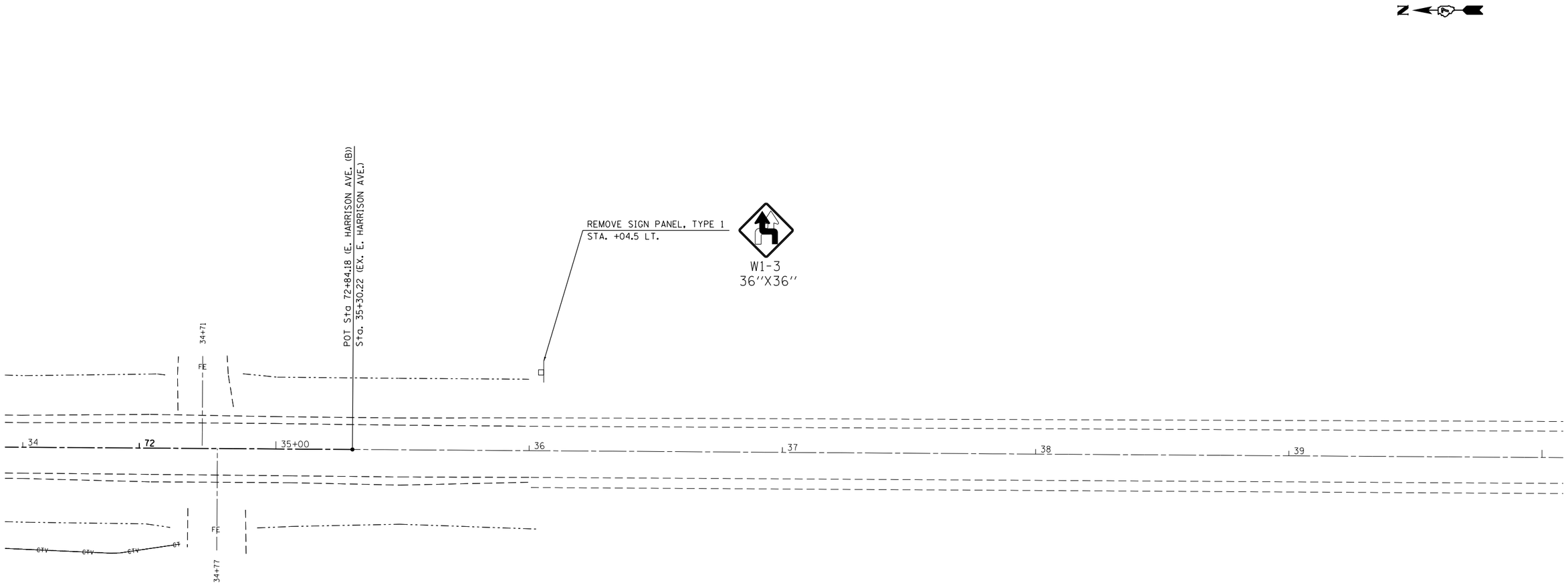

FILE NAME =	USER NAME = steffenmk	DESIGNED -	REVISED -	STATE OF ILLINOIS DEPARTMENT OF TRANSPORTATION	SIGNING PLAN OLD EXISTING			F.A.P. RTE.	SECTION	COUNTY	TOTAL SHEETS	SHEET NO.
c:\pw_work\pwidot\steffenmk\d0158776\D774423-sht-signing.dgn		DRAWN -	REVISED -					91	5N	Coles	271	117
	PLOT SCALE = 40.0000 ' / in.	CHECKED -	REVISED -					CONTRACT NO. 74423				
	PLOT DATE = 5/7/2014	DATE -	REVISED -		SCALE: 20	SHEET 15 OF 15 SHEETS	STA. 34+00 TO STA. 40+00	ILLINOIS FED. AID PROJECT				

Illinois Department of Transportation
Division of Highways
IDOT

SOIL BORING LOG

Date 12/5/12

ROUTE FAU 7623 (Harrison Ave) DESCRIPTION Proposed Box Culvert on East Harrison Ave new alignment LOGGED BY E. Sandschafer

SECTION 5N LOCATION NE, SEC. 13, TWP. 12 N, RNG. 9 E, 3 PM

COUNTY Coles DRILLING METHOD Hand Auger HAMMER TYPE N/A

STRUCT. NO. 015-8668
Station 64+50

BORING NO. 1
Station 64+54
Offset 0.0ft CL
Ground Surface Elev. 681.81 ft

Surface Water Elev. N/A ft
Stream Bed Elev. 100 ft

Groundwater Elev.:
First Encounter 675.8 ft
Upon Completion 676.3 ft
After 168 Hrs. 676.8 ft

Description	Elev.	DEPTH (ft)	BLOWS /6"	UCS Qu (tsf)	MOIST (%)
Very stiff, damp, gray, CLAY w/ trace Silt.					
				2.3	22
				2.3	22
Gray marbled brown.				2.8	23
	677.81				
Medium, damp, gray marbled brown, SILTY CLAY.	▼676.81	-5		0.8	23
Very soft, very damp, brown, SILTY LOAM.				0.0	21
				0.0	27
				0.0	29
	673.81				
Stiff, damp, brown, SANDY CLAY.				1.5	24
				1.5	15
	671.81	-10			
Stiff, damp, gray, CLAY LOAM.				1.3	19
	670.31			2.3	13
Stiff, damp, gray, CLAY LOAM TILL.	669.81			2.0	13
Extent of exploration. (Hand auger refusal)					
Note: All Qu tests by Pocket Penetrometer.		-15			
Proposed 10'x3' box culvert on new alignment of Harrison Ave, East of IL 16.					
		-20			

The Unconfined Compressive Strength (UCS) Failure Mode is indicated by (B-Bulge, S-Shear, P-Penetrometer, E-Estimated)
Abbreviations W.O.H - Sampler Advanced By Weight of Hammer, W.O.P - Advanced by Weight of Pipe, B.S. - Before Seating
The SPT (N value) is the sum of the last two blow values in each sampling zone (AASHTO T206) BBS, from 137 (Rev. 8-99)

File Name S:\NEW GEOTECHNICAL DRITDATA\PROJECTS\COLES CO (015)\015-8668 SOIL 2012 HARRISON STREET.GPJ Date Template DGTEMPLT.GDT Date Printed 12/12/12
Latitude N 38 Deg 08.815 min Longitude W 89 Deg 29.485 min Datum NAD Number

FILE NAME =	USER NAME = steffenmk	DESIGNED -	REVISED -
c:\pw_work\pwidot\steffenmk\d0158776\D774423-sht-details.dgn		DRAWN -	REVISED -
	PLOT SCALE = 100.0000 ' / in.	CHECKED -	REVISED -
Default	PLOT DATE = 5/7/2014	DATE -	REVISED -

STATE OF ILLINOIS
DEPARTMENT OF TRANSPORTATION

BORING LOG

SCALE: NA | SHEET 1 OF 1 SHEETS | STA. TO STA.

F.A.P. RTE.	SECTION	COUNTY	TOTAL SHEETS	SHEET NO.
91	5N	Coles	271	118

CONTRACT NO. 74423

ILLINOIS FED. AID PROJECT

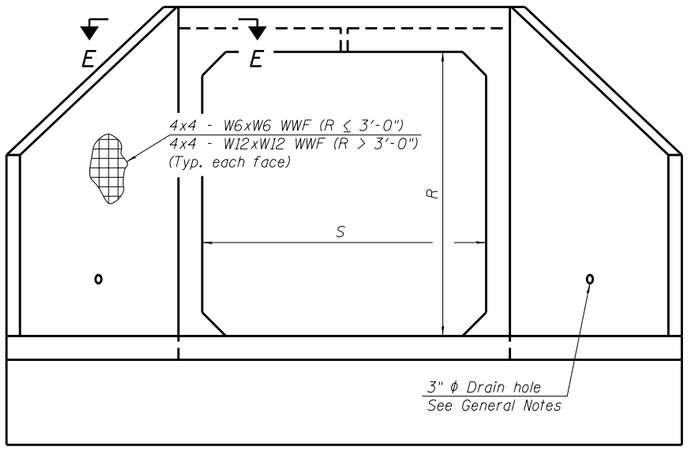

END VIEW

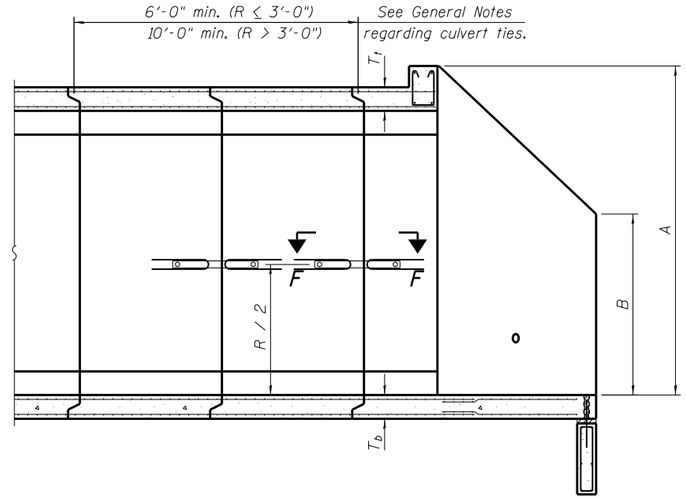

SECTION A-A

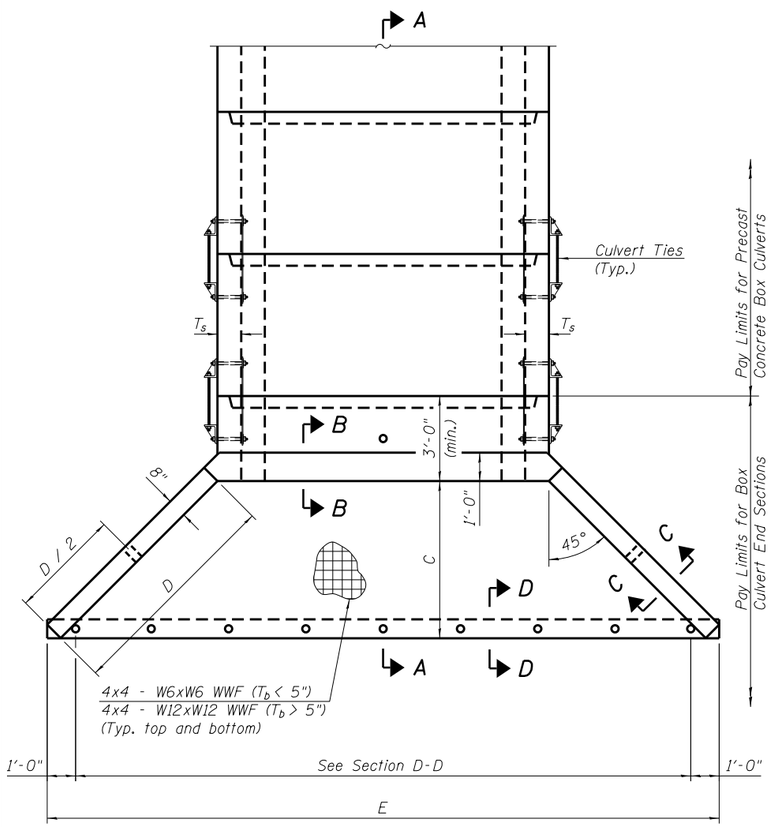

PLAN

GENERAL NOTES

Box Culvert End Sections shall be constructed according to the requirements of Section 540 of the Standard Specifications except as modified herein. End sections will be paid for at the contract unit price per each for Box Culvert End Sections.

The Contractor may furnish the end section as a single precast concrete piece or construct the end section in the field using cast-in-place (CIP) construction. For CIP construction, the bottom slab thickness shall be increased by 2" and the clear cover to the bottom mat of reinforcement shall be increased to 3".

Box section dimensions, materials, and reinforcement details for Box Culvert End Sections shall be according to the requirements for ASTM C 1577 as required for the design of the portion of the culvert within the limits of Precast Concrete Box Culverts except as modified herein.

The number of culvert ties shall be sufficient to engage the minimum length of culvert barrel shown within the pay limits for Precast Concrete Box Culverts and will be dependent upon the length of box culvert segments furnished by the Contractor. Culvert ties are not required for box culverts having a rise (R) less than or equal to 3 ft and a span (S) greater than or equal to 10 ft.

All costs associated with furnishing and installing or constructing the toewall and culvert ties will not be measured for payment but shall be included in the unit price for Box Culvert End Sections of the culvert number specified.

Shop drawings that detail slab thickness and reinforcement layout for the Box Culvert End Sections shall be provided to the Engineer for review and approval. Reinforcement bars not detailed herein shall be detailed with a clear distance at the end of the reinforcement not less than ½" nor more than 2". For the precast option, it shall be the Contractor's responsibility for determining a method of handling and a construction procedure shall be included on the shop drawings. The Contractor shall determine and detail in the shop drawings any necessary strengthening or stiffening provisions necessary to handle the precast segment. Any required modifications shall be at no extra charge.

The Contractor may use reinforcement bars in lieu of welded wire fabric (WWF). Reinforcement bars shall be limited to the sizes of #3 through #5 bars, a maximum spacing of the lesser of 8" or the member thickness, and shall result in area of reinforcement equal to or greater than that provided by the WWF. Minimum lap lengths detailed herein are applicable to WWF and reinforcement bars.

Reinforcement (circumferential and longitudinal) in the culvert barrel portion of the end section being lapped with reinforcement from the wingwalls or bottom slab of the end section shall not be less than that required by ASTM C 1577 for the design fill height or the reinforcement detailed for the end section, whichever is greater.

Reinforcement bars shall conform to the requirements of ASTM A 706 Gr 60.

Reinforcement bars designated (E) shall be epoxy coated.

Bonded construction joints shall be prepared according to Article 503.09 of the Standard Specifications.

One drain hole shall be provided in each wingwall for end sections of box culverts having an opening with a clear rise greater than 3 ft. The drain hole shall be located within the lower 1/3 of the clear rise of the box culvert and shall conform to the requirements of Article 503.11 of the Standard Specifications.

APRON END SECTION DIMENSIONS

Span (S)	Rise (R)	T_t	T_b	T_s	A	B	C	D	E	Concrete Cu. Yd.	Culvert Ties Required
3'-0"	2'-0"	7"	6"	4"	3'-4"	2'-2"	2'-10 5/8"	4'-1"	10'-4 5/8"	2.8	Yes
3'-0"	2'-0"	4"	4"	4"	3'-1"	2'-1"	2'-7 7/8"	3'-9"	9'-11"	2.3	Yes
3'-0"	3'-0"	7"	6"	4"	4'-4"	2'-8"	3'-10 5/8"	5'-6"	12-4 5/8"	3.7	Yes
3'-0"	3'-0"	4"	4"	4"	4'-1"	2'-7"	3'-7 7/8"	5'-2"	11'-11"	3.1	Yes
4'-0"	2'-0"	7.5"	6"	5"	3'-4 1/2"	2'-2 1/2"	2'-11 3/8"	4'-2"	11'-8"	3.3	Yes
4'-0"	2'-0"	5"	5"	5"	3'-2"	2'-1"	2'-8 1/2"	3'-10"	11'-2 3/8"	2.8	Yes
4'-0"	3'-0"	7.5"	6"	5"	4'-4 1/2"	2'-8 1/2"	3'-11 3/8"	5'-7"	13'-8 1/8"	4.2	Yes
4'-0"	3'-0"	5"	5"	5"	4'-2"	2'-7"	3'-8 1/2"	5'-3"	13'-2 3/8"	3.7	Yes
4'-0"	4'-0"	7.5"	6"	5"	5'-4 1/2"	3'-2 1/2"	4'-11 3/8"	7'-0"	15'-8 1/8"	5.3	Yes
4'-0"	4'-0"	5"	5"	5"	5'-2"	3'-1"	4'-8 5/8"	6'-8"	15'-2 1/2"	4.7	Yes
5'-0"	2'-0"	8"	7"	6"	3'-5"	2'-3"	2'-11 3/8"	4'-2"	12'-10"	3.9	Yes
5'-0"	2'-0"	6"	6"	6"	3'-3"	2'-2"	2'-10"	4'-0"	12'-7 1/4"	3.5	Yes
5'-0"	3'-0"	8"	7"	6"	4'-5"	2'-9"	3'-11 3/8	5'-7"	14'-10 1/8"	4.9	Yes
5'-0"	3'-0"	6"	6"	6"	4'-3"	2'-8"	3'-10"	5'-5"	14'-7 1/4"	4.5	Yes
5'-0"	4'-0"	8"	7"	6"	5'-5"	3'-3"	4'-11 3/8"	7'-0"	16'-10 1/8"	6.1	Yes
5'-0"	4'-0"	6"	6"	6"	5'-3"	3'-2"	4'-9 1/4"	6'-9"	16'-5 7/8"	5.5	Yes
5'-0"	5'-0"	8"	7"	6"	6'-5"	3'-9"	5'-11 3/8"	8'-5"	18'-10 1/8"	7.4	Yes
5'-0"	5'-0"	6"	6"	6"	6'-3"	3'-8"	5'-9 1/4"	8'-2"	18'-5 7/8"	6.8	Yes
6'-0"	2'-0"	8"	7"	7"	3'-5"	2'-3"	2'-11 3/8"	4'-2"	14'-0"	4.3	Yes
6'-0"	2'-0"	7"	7"	7"	3'-4"	2'-2"	2'-10 5/8"	4'-1"	13'-10 5/8"	4.2	Yes
6'-0"	3'-0"	8"	7"	7"	4'-5"	2'-9"	3'-11 3/8"	5'-7"	16'-0 1/8"	5.4	Yes
6'-0"	3'-0"	7"	7"	7"	4'-4"	2'-8"	3'-10 5/8"	5'-6"	15'-10 5/8"	5.2	Yes
6'-0"	4'-0"	8"	7"	7"	5'-5"	3'-3"	4'-11 3/8"	7'-0"	18'-0 1/8"	6.5	Yes
6'-0"	4'-0"	7"	7"	7"	5'-4"	3'-2"	4'-10 3/4"	6'-11"	17'-10 3/4"	6.5	Yes
6'-0"	5'-0"	8"	7"	7"	6'-5"	3'-9"	5'-11 3/8"	8'-5"	20'-0 1/8"	8.0	Yes
6'-0"	5'-0"	7"	7"	7"	6'-4"	3'-8"	5'-10 3/4"	8'-4"	19'-10 3/4"	7.8	Yes
6'-0"	6'-0"	8"	7"	7"	7'-5"	4'-3"	6'-11 1/2"	9'-10"	22'-0 1/4"	9.5	Yes
6'-0"	6'-0"	7"	7"	7"	7'-4"	4'-2"	6'-10 3/4"	9'-9"	21'-10 3/4"	9.3	Yes
7'-0"	4'-0"	8"	8"	8"	5'-5"	3'-3"	4'-11 3/8"	7'-0"	19'-2 1/8"	7.4	Yes
7'-0"	5'-0"	8"	8"	8"	6'-5"	3'-9"	5'-11 3/8"	8'-5"	21'-2 1/8"	8.9	Yes
7'-0"	6'-0"	8"	8"	8"	7'-5"	4'-3"	6'-11 1/2"	9'-10"	23'-2 1/4"	10.6	Yes
8'-0"	2'-0"	8"	8"	8"	3'-5"	2'-3"	2'-11 3/8"	4'-2"	16'-2"	5.3	Yes
8'-0"	3'-0"	8"	8"	8"	4'-5"	2'-9"	3'-11 3/8"	5'-7"	18'-2 1/8"	6.5	Yes
8'-0"	4'-0"	8"	8"	8"	5'-5"	3'-3"	4'-11 3/8"	7'-0"	20'-2 1/8"	7.8	Yes
8'-0"	5'-0"	8"	8"	8"	6'-5"	3'-9"	5'-11 3/8"	8'-5"	22'-2 1/8"	9.3	Yes
8'-0"	6'-0"	8"	8"	8"	7'-5"	4'-3"	6'-11 1/2"	9'-10"	24'-2 1/4"	11.0	Yes
9'-0"	5'-0"	9"	9"	9"	6'-6"	3'-9"	6'-0 7/8"	8'-7"	23'-7"	10.6	Yes
9'-0"	6'-0"	9"	9"	9"	7'-6"	4'-3"	7'-0 1/8"	9'-11"	25'-5 5/8"	12.4	Yes
10'-0"	2'-0"	10"	10"	10"	3'-7"	2'-4"	3'-1 1/2"	4'-5"	18'-10 1/4"	7.1	No
10'-0"	3'-0"	10"	10"	10"	4'-7"	2'-10"	4'-1 1/2"	5'-10"	20'-10 1/4"	8.6	No
10'-0"	5'-0"	10"	10"	10"	6'-7"	3'-10"	6'-1 1/2"	8'-8"	24'-10 3/8"	12.0	Yes
10'-0"	6'-0"	10"	10"	10"	7'-7"	4'-4"	7'-1 1/2"	10'-1"	26'-10 3/8"	13.9	Yes
11'-0"	4'-0"	11"	11"	11"	5'-8"	3'-4"	5'-2 1/4"	7'-4"	24'-1 3/4"	11.5	Yes
11'-0"	6'-0"	11"	11"	11"	7'-8"	4'-4"	7'-2 1/4"	10'-2"	28'-1 7/8"	15.5	Yes
12'-0"	2'-0"	12"	12"	12"	3'-9"	2'-5"	3'-3 5/8"	4'-8"	21'-6 1/2"	9.3	No
12'-0"	3'-0"	12"	12"	12"	4'-9"	2'-11"	4'-3 5/8"	6'-1"	23'-6 1/2"	11.1	No
12'-0"	4'-0"	12"	12"	12"	5'-9"	3'-5"	5'-3 5/8"	7'-6"	25'-6 5/8"	13.0	Yes
12'-0"	6'-0"	12"	12"	12"	7'-9"	4'-5"	7'-3 5/8"	10'-4"	29'-6 5/8"	17.4	Yes

Note:

Two sets of apron end section dimensions are shown above for some box culvert sizes due to the top and bottom slabs having different thicknesses per ASTM C 1577 for design fill heights less than 2 ft.

FILE NAME =	USER NAME = steffenmk	DESIGNED -	REVISED -
c:\pw_work\pwidot\steffenmk\d0158776\D774423-sht-details.dgn		DRAWN -	REVISED -
	PLOT SCALE = 100.0000 ' / in.	CHECKED -	REVISED -
Default	PLOT DATE = 5/7/2014	DATE -	REVISED -

STATE OF ILLINOIS
DEPARTMENT OF TRANSPORTATION

PRECAST CONCRETE BOX CULVERT
APRON END SECTION DETAILS

SCALE: NA | SHEET 1 OF 1 SHEETS | STA. TO STA.

F.A.P. RTE.	SECTION	COUNTY	TOTAL SHEETS	SHEET NO.
91	5N	Coles	271	119

CONTRACT NO. 74423

ILLINOIS FED. AID PROJECT

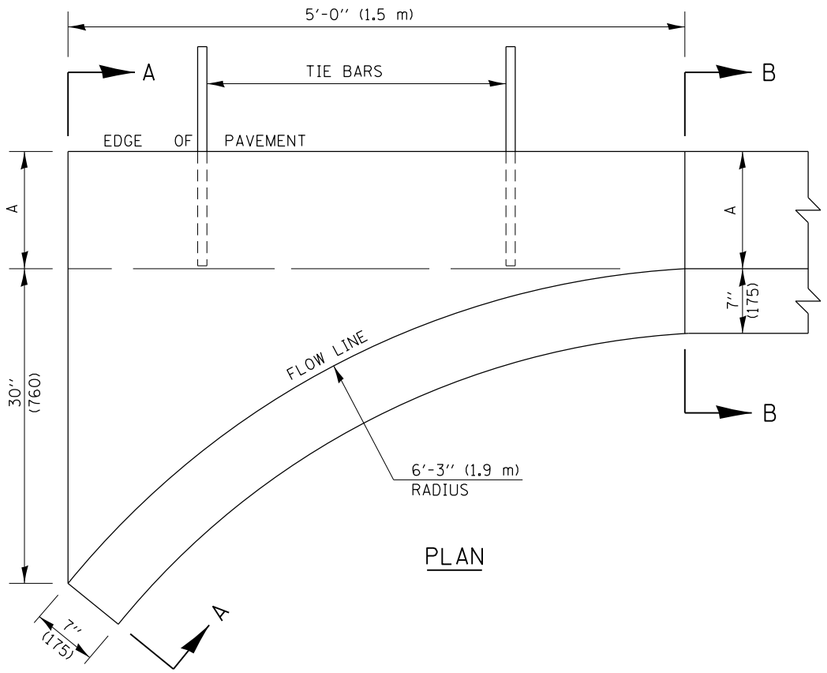

PLAN

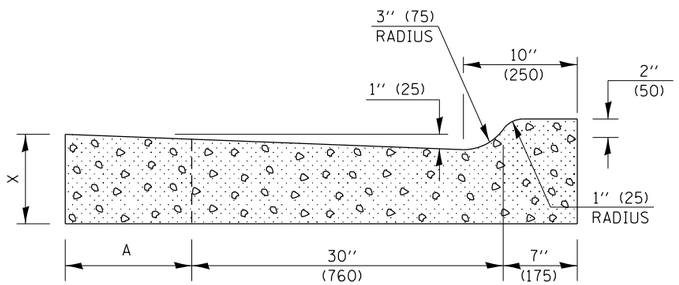

SECTION A-A

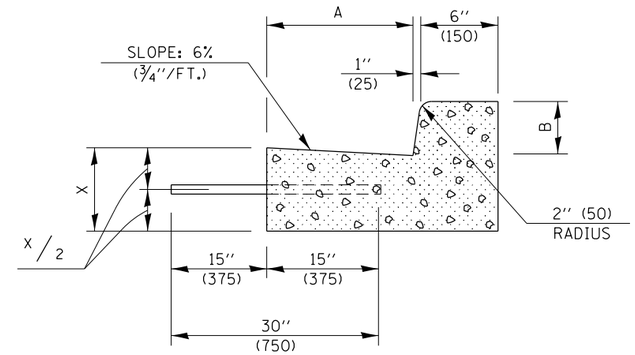

SECTION B-B

	B-6.12 (B-15.30)		B-9.12 (B-22.30)		B-6.18 (B-15.45)		B-9.18 (B-22.45)		B-6.24 (B-15.60)		B-9.24 (B-22.60)	
A	12'' (300)	12'' (300)	12'' (300)	12'' (300)	18'' (450)	18'' (450)	18'' (450)	18'' (450)	24'' (600)	24'' (600)	24'' (600)	24'' (600)
B	6'' (150)	6'' (150)	9'' (225)	9'' (225)	6'' (150)	6'' (150)	9'' (225)	9'' (225)	6'' (150)	6'' (150)	9'' (225)	9'' (225)
X	9'' (225)	10'' (250)	9'' (225)	10'' (250)	9'' (225)	10'' (250)	9'' (225)	10'' (250)	9'' (225)	10'' (250)	9'' (225)	10'' (250)
CU. YD. (m^3) CLASS SI CONCRETE (OUTLET)	0.37 (0.28)	0.42 (0.32)	0.38 (0.29)	0.42 (0.32)	0.44 (0.34)	0.49 (0.37)	0.45 (0.34)	0.50 (0.38)	0.51 (0.39)	0.56 (0.43)	0.52 (0.40)	0.57 (0.44)

GENERAL NOTES

1. CLASS SI CONCRETE SHALL BE USED THROUGHOUT.
2. TIE BARS SHALL BE NO. 6 (NO. 20) AT 24'' (600 mm) CENTERS UNLESS OTHERWISE SHOWN. OUTLETS SHALL BE TIED TO THE PAVEMENT IN ACCORDANCE WITH DETAILS FOR LONGITUDINAL CONSTRUCTION JOINT SHOWN ON STANDARD 420001.
3. WHEN SPECIAL OUTLET IS CONSTRUCTED ADJACENT TO FLEXIBLE PAVEMENT, THE TIE BARS SHALL BE OMITTED AND ALL CONSTRUCTION JOINTS SHALL BE PROVIDED WITH A DOWEL BAR CONFORMING TO ARTICLE 1006.11(b).
4. THIS WORK WILL BE PAID FOR AT THE CONTRACT UNIT PRICE PER CU. YD. (m^3) FOR CLASS SI CONCRETE (OUTLET), SPECIAL. TIE BARS WILL BE PAID FOR SEPARATELY ACCORDING TO ARTICLE 508.07.

NOT TO SCALE

Note: All dimensions are in INCHES (millimeters) unless otherwise shown.

DISTRICT 7 DETAIL NO. X6060097

FILE NAME = c:\pw_work\pwidot\steffenmk\d0158776\D774423-sht-details.dgn	USER NAME = steffenmk	DESIGNED -	REVISED - DRM 4-11
		DRAWN -	REVISED -
	PLOT SCALE = 100.0000 ' / in.	CHECKED -	REVISED -
	PLOT DATE = 5/7/2014	DATE -	REVISED -

STATE OF ILLINOIS
DEPARTMENT OF TRANSPORTATION

CLASS SI CONCRETE (OUTLET), SPECIAL

SCALE: na | SHEET NO. 1 OF 1 SHEETS | STA. TO STA.

F.A.P. RTE.	SECTION	COUNTY	TOTAL SHEETS	SHEET NO.
91	5N	Coles	271	120

CONTRACT NO. 74423

ILLINOIS FED. AID PROJECT

DETAIL OF CONCRETE MEDIAN, TYPE SM–6 (SM–15) (DOWELED)

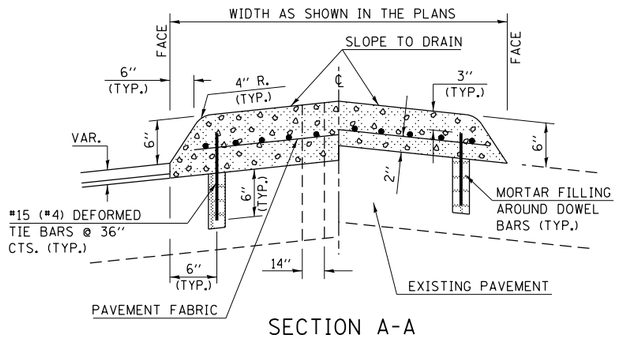

SECTION A-A

GENERAL NOTES

1. THE GENERAL NOTES FOR STANDARD 606301 SHALL APPLY.
2. SECTION G-G SHALL BE THE SAME AS SHOWN ON STANDARD 606301.
3. DOWEL BARS @ 36″ CTS. OR AS DIRECTED BY THE ENGINEER.
4. THIS WORK WILL BE PAID FOR AT THE CONTRACT UNIT PRICE PER SQ FOOT FOR CONCRETE MEDIAN, TYPE SM-6 (SM-15) (DOWELED), INCLUDING THE COST OF FURNISHING AND INSTALLING THE DOWEL BARS, MORTAR FILLING, PAVEMENT FABRIC AND THE REMOVAL AND DISPOSAL OF THE EXISTING PAVEMENT FOR THE 14″ x 14″ OPENING, IF REQUIRED, AND NO ADDITIONAL COMPENSATION WILL BE ALLOWED.

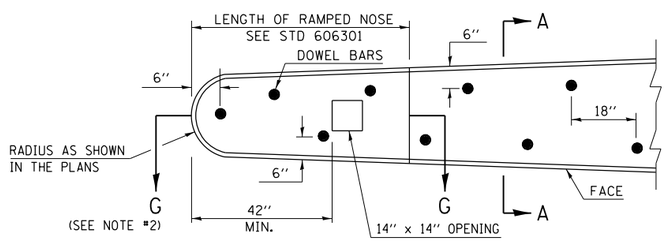

PLAN OF MEDIAN

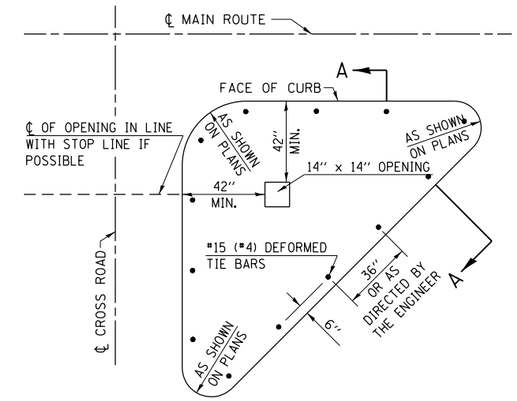

PLAN OF CORNER ISLAND

FILE NAME =	USER NAME = steffenmk	DESIGNED -	REVISED -	STATE OF ILLINOIS DEPARTMENT OF TRANSPORTATION	CONCRETE MEDIAN, TYPE SM–6 (SM15) (DOWELLED)	F.A.P. RTE.	SECTION	COUNTY	TOTAL SHEETS / SHEET NO.
c:\pw_work\pwidot\steffenmk\d0158776\D774423-sht-details.dgn		DRAWN -	REVISED -			91	5N	COLES	271 / 121
	PLOT SCALE = 100.0000 ' / in.	CHECKED -	REVISED -					CONTRACT NO. 74423	
Default	PLOT DATE = 5/7/2014	DATE -	REVISED -		SCALE: N/A SHEET 1 OF 1 SHEETS STA. TO STA.		ILLINOIS	FED. AID PROJECT	

IL. RTE. 16

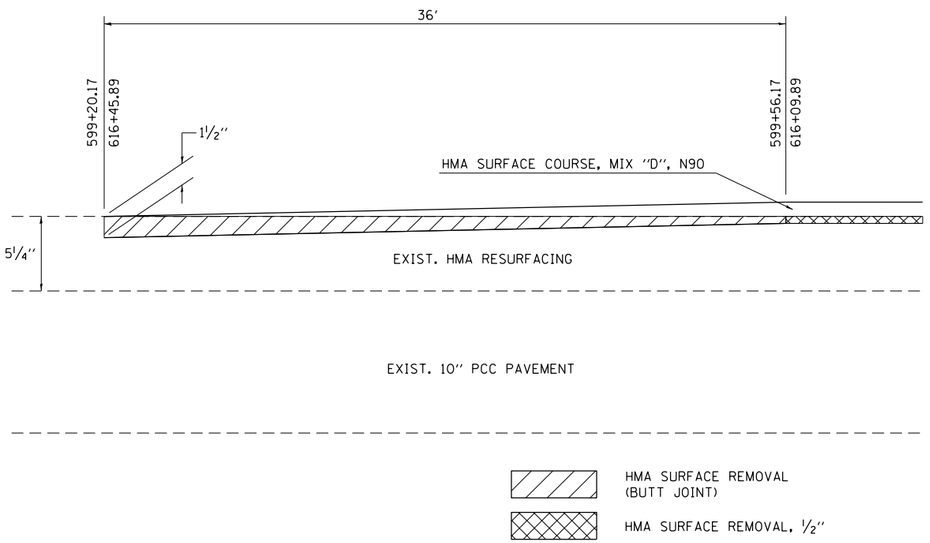

EAST HARRISON AVENUE

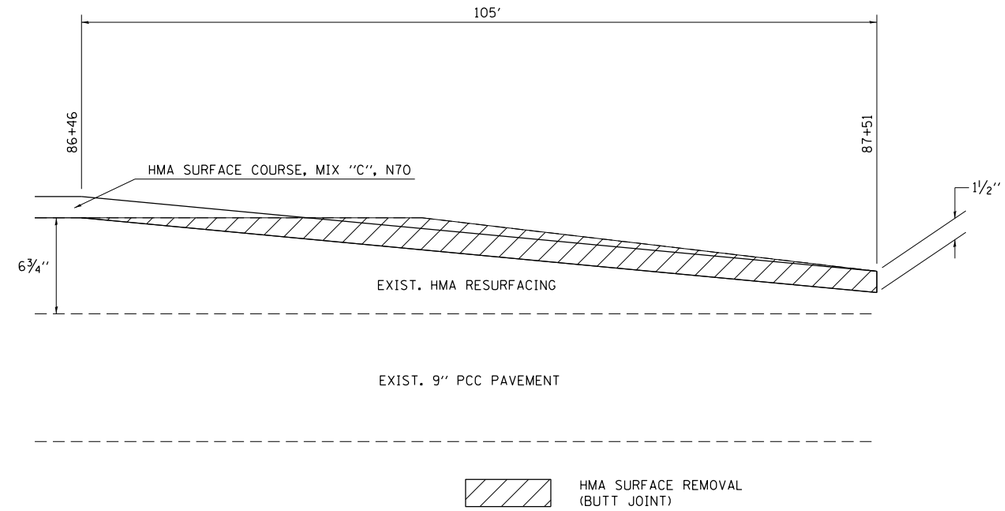

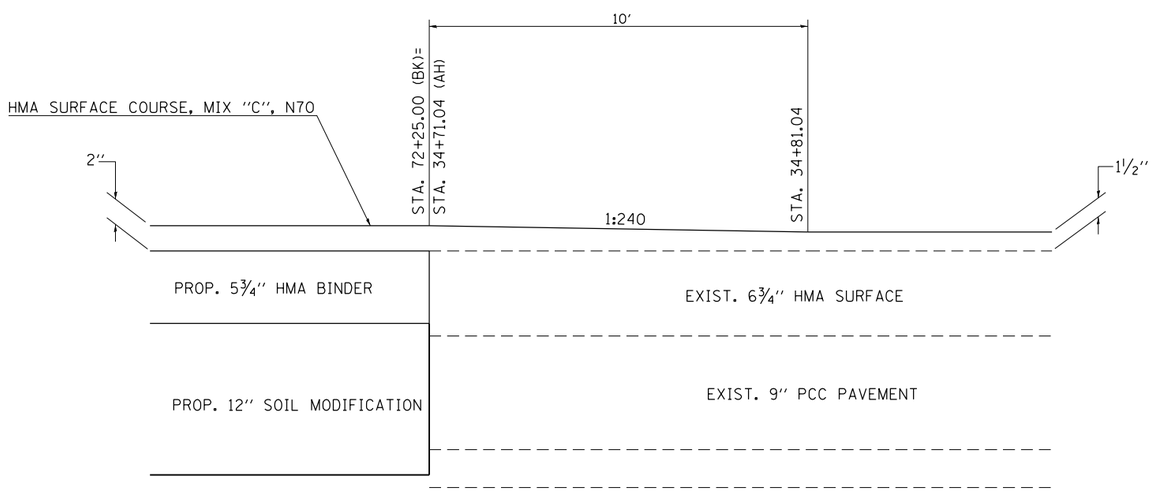

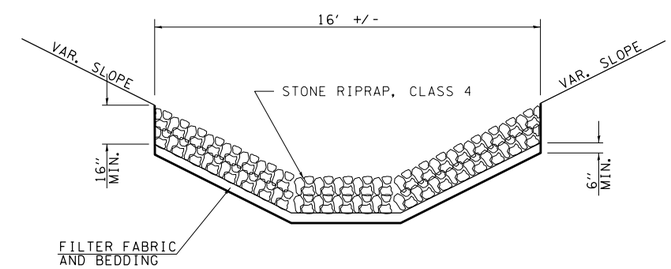

DETAIL OF RIPRAP, CLASS 4

FILE NAME = c:\pw_work\pwidot\steffenmk\d0158776\D774423-sht-details.dgn	USER NAME = steffenmk	DESIGNED -	REVISED -	STATE OF ILLINOIS DEPARTMENT OF TRANSPORTATION	BUTT JOINT DETAILS	F.A.P. RTE.	SECTION	COUNTY	TOTAL SHEETS	SHEET NO.
		DRAWN -	REVISED -			91	5N	Coles	271	122
	PLOT SCALE = 100.0000 ' / in.	CHECKED -	REVISED -					CONTRACT NO. 74423		
Default	PLOT DATE = 5/7/2014	DATE -	REVISED -		SCALE: NA SHEET 1 OF 1 SHEETS STA. TO STA.		ILLINOIS	FED. AID PROJECT		

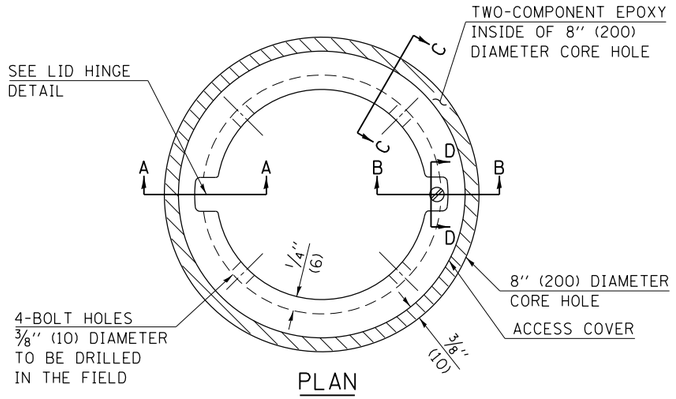

PLAN

LEGEND

- ALUMINUM CASTING
- 5" (125) OR 6" (150) P.V.C. PIPE
- TWO-COMPONENT EPOXY

T = THICKNESS OF PAVEMENT STRUCTURE

H = THE THICKNESS OF THE SUB-BASE GRANULAR + 1" (25)

BILL OF MATERIAL

ALUMINUM CASTING OF THE DIMENSIONS AND SPECIFICATIONS SHOWN OR OTHER SUBJECT TO ENGINEER'S APPROVAL OF SHOP DRAWINGS, 4 EACH - 5/16" X 2" (M8 X 50) BOLTS WITH NUTS, EPOXY, 5" OR 6" (125 mm OR 150 mm) DIAMETER P.V.C. PIPE, SCHEDULE 40 (WHEN REQUIRED).

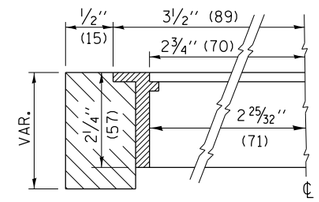

SECTION C-C

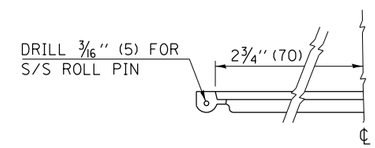

LID HINGE DETAIL

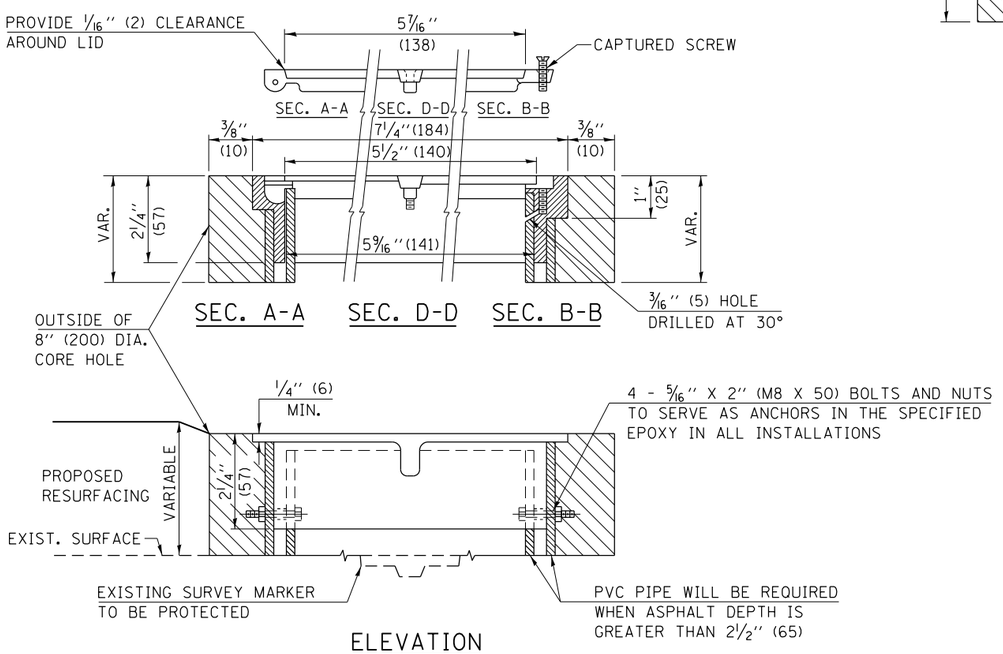

ELEVATION

EXISTING SURVEY MARKER

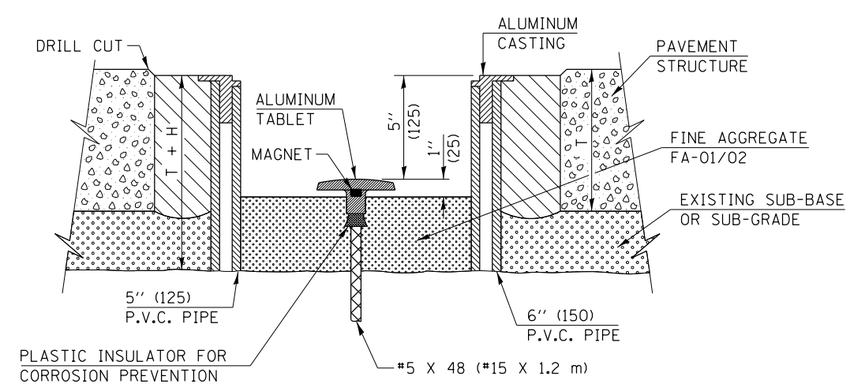

ELEVATION

PROPOSED SURVEY MARKER

NOT TO SCALE

Note: All dimensions are in INCHES (millimeters) unless otherwise shown.

DISTRICT 7 DETAIL NO. Z0070202

FILE NAME = c:\pw_work\pwidot\steffenmk\d0158776\D774423-sht-details.dgn	USER NAME = steffenmk	DESIGNED -	REVISED - MAD 6-11
		DRAWN -	REVISED -
	PLOT SCALE = 100.0000 ' / in.	CHECKED -	REVISED -
	PLOT DATE = 5/7/2014	DATE -	REVISED -

STATE OF ILLINOIS
DEPARTMENT OF TRANSPORTATION

SURVEY MARKER VAULT

SCALE: N/A | SHEET NO. 1 OF 1 SHEETS | STA. | TO STA.

F.A.P. RTE.	SECTION	COUNTY	TOTAL SHEETS	SHEET NO.
91	5N	Coles	271	123

CONTRACT NO. 74423

FED. ROAD DIST. NO. | ILLINOIS | FED. AID PROJECT

DETAIL FOR TREATMENT OF EXISTING FIELD TILE SYSTEMS

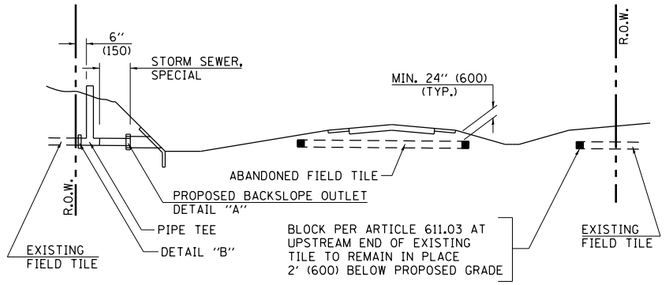

METHOD 'A' (2 LANE)

STORM SEWER FLOW LINE ABOVE PROPOSED DITCH FLOW LINE

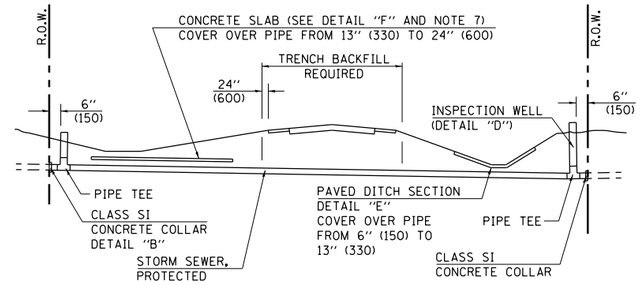

METHOD 'B' (2 LANE)

STORM SEWER LESS THAN 2' (600 mm) BELOW DITCH FLOW LINE AND STORM SEWERS CROSSING UNDER PAVEMENT AND PAVED DITCH

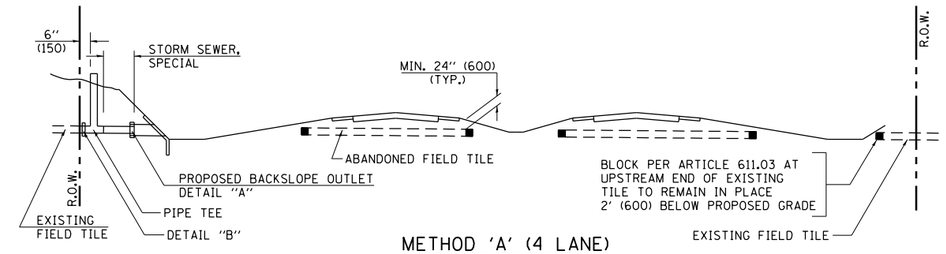

METHOD 'A' (4 LANE)

STORM SEWER FLOW LINE ABOVE PROPOSED DITCH FLOW LINE

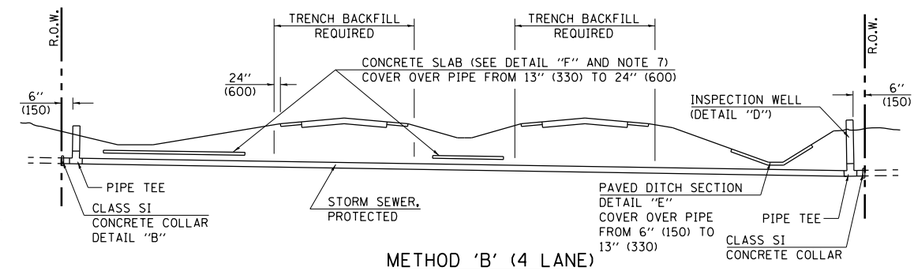

METHOD 'B' (4 LANE)

STORM SEWER LESS THAN 2' (600 mm) BELOW DITCH FLOW LINE AND STORM SEWERS CROSSING UNDER PAVEMENTS AND PAVED DITCHES

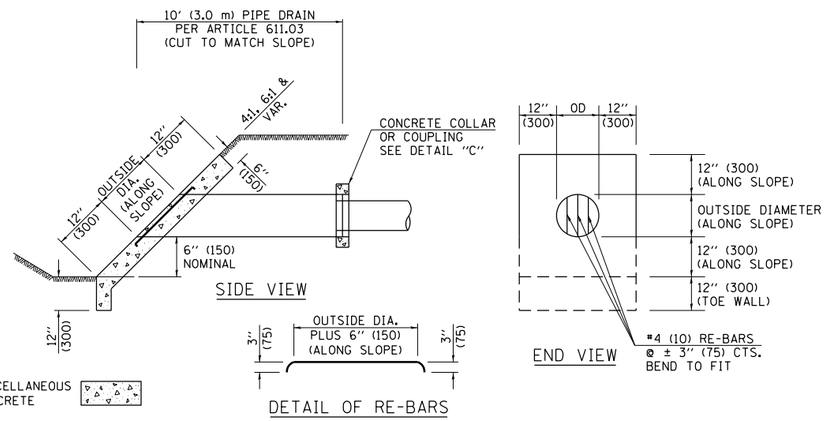

HEADWALL FOR BACKSLOPE OUTLET

DETAIL "A"

CONCRETE PIPE STANDARD SIZES	
STORM SEWER	RISER
6" (150)	6" (150)
8" (200)	6" (150)
10" (250)	8" (200)
12" (300)	10" (250)
OR GREATER	

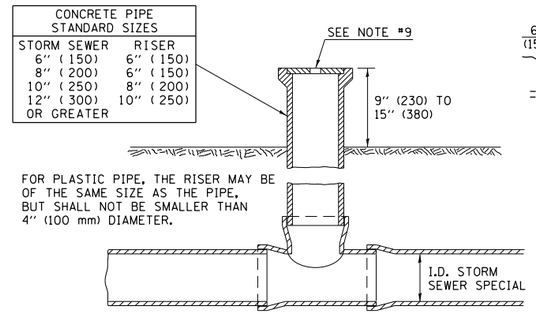

INSPECTION WELL

DETAIL "D"

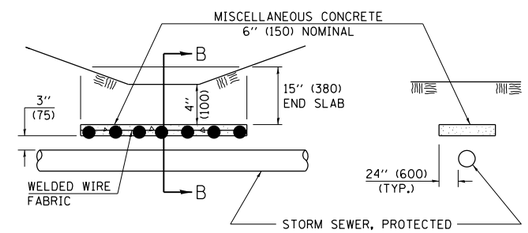

SLAB ELEVATION

SECTION B-B

CONCRETE SLAB

DETAIL "F"

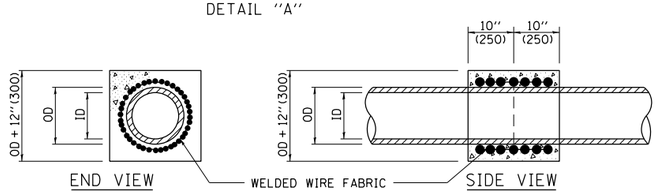

CONCRETE COLLAR

DETAIL "B"

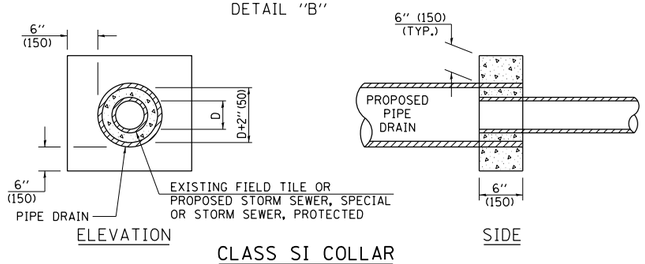

CLASS SI COLLAR

DETAIL "C"

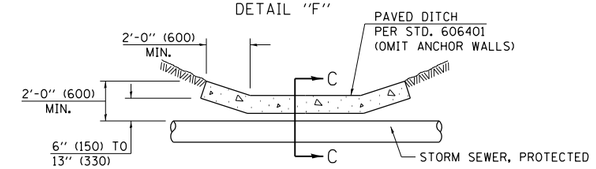

PAVED DITCH ELEVATION

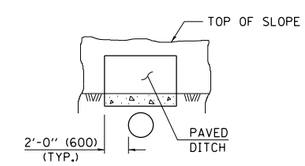

SECTION C-C

PAVED DITCH

DETAIL "E"

ALL DIMENSIONS ARE IN INCHES (MILLIMETERS) UNLESS OTHERWISE SHOWN.

GENERAL NOTES

1. EXISTING FIELD TILE ENCOUNTERED BY EXPLORATION TRENCH SHALL BE INSPECTED BY THE ENGINEER FOR UNOBSTRUCTED FLOW WITHIN THE LIMITS OF THE RIGHT-OF-WAY.
2. ONLY FIELD TILE THAT DOES NOT HAVE SATISFACTORY FLOW AND OR HAS VISIBLE SIGNS OF DETERIORATION (SINK HOLES, ETC.) SHALL BE REPLACED WITHIN THE LIMITS OF THE RIGHT-OF-WAY IN ACCORDANCE WITH METHOD "B".
3. INSPECTION WELLS SHALL BE CONSTRUCTED APPROXIMATELY 6" (150 mm) INSIDE OF BOTH RIGHT-OF-WAY LINES AT ALL FIELD TILE LOCATIONS.
4. EXISTING FIELD TILE ABANDONED UNDER EXISTING PAVEMENTS OR PAVED SHOULDERS SHALL BE FILLED WITH FLOWABLE GROUT AS DIRECTED BY THE ENGINEER. THIS WORK WILL BE PAID FOR ACCORDING TO ARTICLE 109.04.
5. NON-CIRCULAR FIELD TILE SHALL BE REPLACED WITH STORM SEWER, SPECIAL OF AT LEAST THE SAME CROSS SECTIONAL AREA. ALL EXISTING FIELD TILE SHALL BE REPLACED WITH STORM SEWER OF THE TYPE REQUIRED FOR THE MINIMUM DEPTH OF COVER.
6. THE 6" (150 mm) CONCRETE SLAB OR DITCH LINING SHALL BE POURED THE LENGTH OF THE TRENCH AT ALL DITCH FLOW LINE LOCATIONS WITHIN THE RIGHT-OF-WAY WITH LESS THAN 2' (600 mm) OF EARTH COVER. MISCELLANEOUS CONCRETE SHALL BE USED ACCORDING TO SECTION 611.
7. ALL MISCELLANEOUS SLABS, APRONS AND DITCH LININGS SHALL BE REINFORCED WITH WELDED WIRE FABRIC AS SHOWN FOR PAVED DITCH IN STANDARD 606401.
8. HEADWALL FOR BACKSLOPE OUTLET MAY BE USED FOR PIPE DRAIN DIAMETERS UP TO 10" (250 mm). SPECIAL DESIGNS WILL BE REQUIRED FOR LARGER SIZES.
9. THE INSPECTION WELL LID FOR P.C.C. PIPE SHALL BE CONSTRUCTED OF 3/8" (10 mm) CAST IRON AND PROVIDED WITH A 1" (25 mm) DIAMETER HOLE IN CENTER. THE LID FOR THE OTHER PIPE MATERIALS SHALL BE A GRATE ASSEMBLY PREFABRICATED FOR AND COMPATIBLE WITH THE PIPE SYSTEM.

TWO LANE/TWO WAY

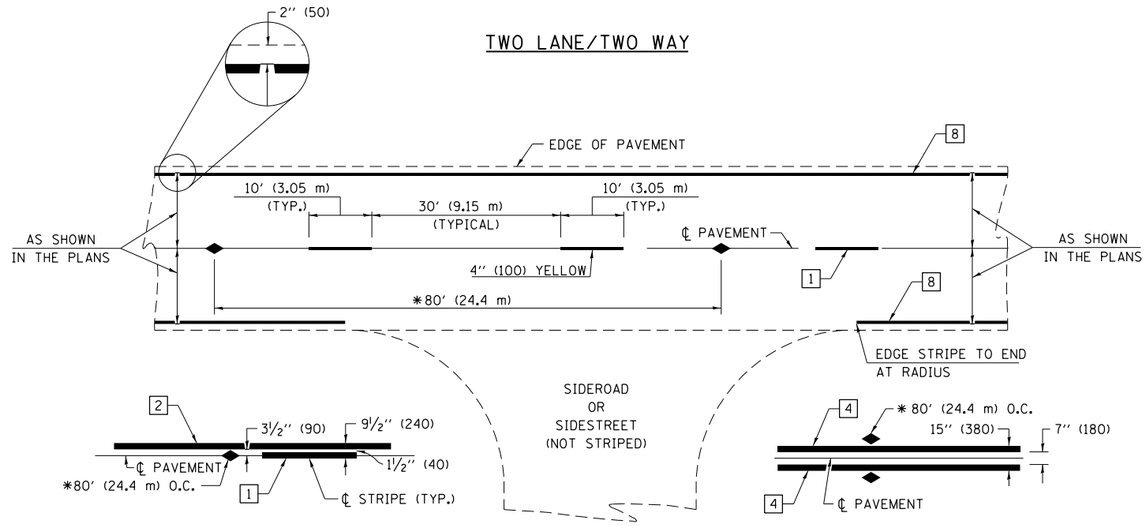

SINGLE NO PASSING

DOUBLE NO PASSING

* REDUCE TO 40' (12.2 m) O.C. ON CURVES WITH POSTED OR ADVISORY SPEEDS OF 45 mph (70 km/h) OR LESS.

PAVEMENT MARKING LEGEND

1. 4" (100) SKIP-DASH (YELLOW)
2. 4" (100) SOLID (YELLOW)
3. 12" (300) DIAGONAL (YELLOW)
4. 4" (100) DOUBLE YELLOW (NARROW)
5. 12" (300) SOLID WHITE
6. RESERVED
7. 6" (150) SKIP-DASH (WHITE)
8. 4" (100) SOLID (WHITE)
9. 12" (300) DIAGONAL (WHITE)
10. 6" (150) SOLID (WHITE)
11. 24" (600) STOP BAR (WHITE)
12. 8" (200) SOLID (WHITE)
13. 4" (100) PARKING WHITE

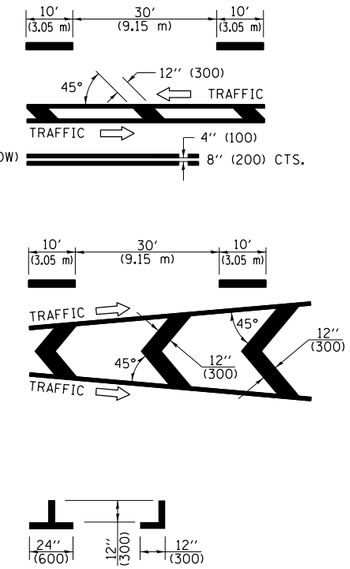

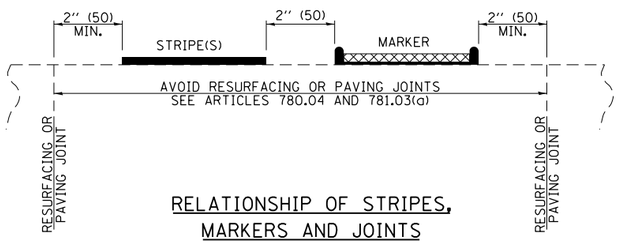

RELATIONSHIP OF STRIPES, MARKERS AND JOINTS

TYPICAL PAVEMENT MARKERS LEGEND

- ◆ TWO-WAY AMBER MARKER
- ▶ ONE-WAY AMBER MARKER
- ▷ ONE-WAY CRYSTAL MARKER

RAISED REFLECTIVE PAVEMENT MARKERS

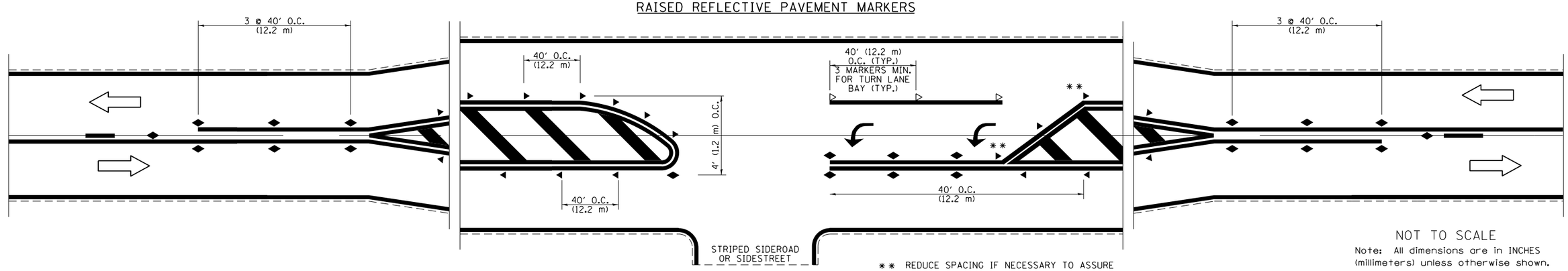

** REDUCE SPACING IF NECESSARY TO ASSURE MARKERS AT CORNER POINTS.

NOT TO SCALE

Note: All dimensions are in INCHES (millimeters) unless otherwise shown.

DISTRICT 7 DETAIL NO. 78000001

FILE NAME = c:\pw_work\pwidot\steffenmk\d0158776\D774423-sht-details.dgn	USER NAME = steffenmk	DESIGNED -	REVISED -
		DRAWN -	REVISED -
	PLOT SCALE = 100.0000 ' / in.	CHECKED -	REVISED -
	PLOT DATE = 5/7/2014	DATE -	REVISED -

STATE OF ILLINOIS
DEPARTMENT OF TRANSPORTATION

PAVEMENT MARKING AND RAISED REFLECTIVE PAVEMENT MARKERS (RURAL & URBAN APPLICATIONS)

SCALE: | SHEET NO. 1 OF 4 SHEETS | STA. | TO STA.

F.A.P. RTE.	SECTION	COUNTY	TOTAL SHEETS	SHEET NO.
91	5N	Coles	271	125

CONTRACT NO. 74423

ILLINOIS FED. AID PROJECT

URBAN LEFT TURN

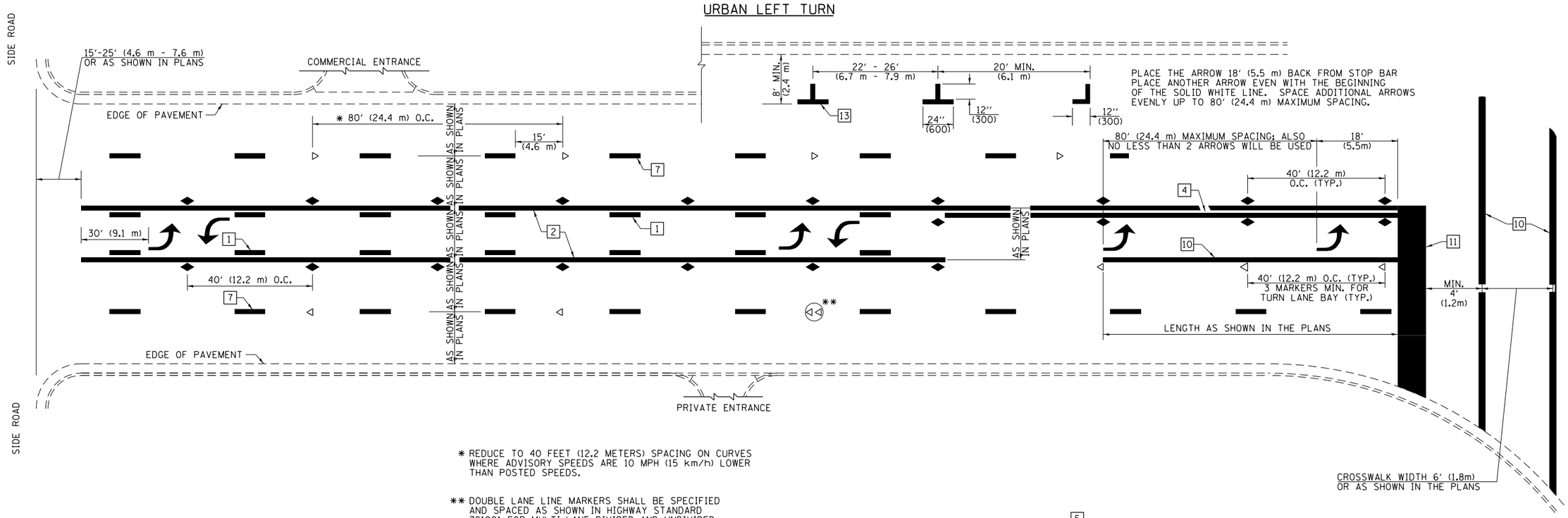

* REDUCE TO 40 FEET (12.2 METERS) SPACING ON CURVES WHERE ADVISORY SPEEDS ARE 10 MPH (15 km/h) LOWER THAN POSTED SPEEDS.

** DOUBLE LANE LINE MARKERS SHALL BE SPECIFIED AND SPACED AS SHOWN IN HIGHWAY STANDARD 781001 FOR MULTI-LANE DIVIDED AND UNDIVIDED HIGHWAYS.

PAVEMENT MARKING LEGEND

1. 4" (100) SKIP-DASH (YELLOW)
2. 4" (100) SOLID (YELLOW)
3. 12" (300) DIAGONAL (YELLOW)
4. 4" (100) DOUBLE YELLOW (NARROW)
5. 12" (300) SOLID WHITE
6. RESERVED
7. 6" (150) SKIP-DASH (WHITE)
8. 4" (100) SOLID (WHITE)
9. 12" (300) DIAGONAL (WHITE)
10. 6" (150) SOLID (WHITE)
11. 24" (600) STOP BAR (WHITE)
12. 8" (200) SOLID (WHITE)
13. 4" (100) PARKING WHITE

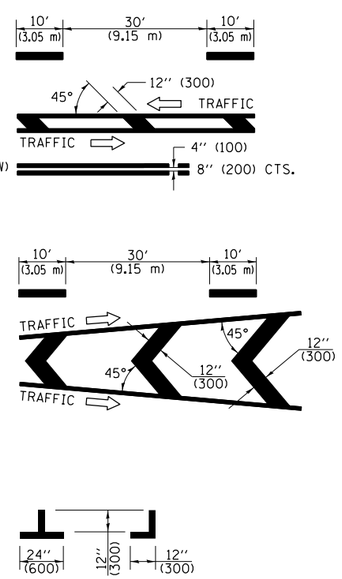

GENERAL NOTES

1. TURN ARROW PAIRS SHALL BE PLACED AT 250'(75 m) INTERVALS AND SHALL BE EVENLY SPACED BETWEEN BOTH ENDS OF THE BIDIRECTIONAL LEFT TURN LANE. USE A MINIMUM OF TWO PAIRS PER BLOCK.
2. THE SOLID YELLOW PAVEMENT MARKINGS [2] SHOULD GENERALLY START OR END NEAR THE RADIUS POINT OF EACH STREET RETURN EXCEPT WHERE ONE OR BOTH ENDS WOULD INCLUDE STOP BARS.
3. THE SKIP-DASH PAVEMENT MARKINGS [1] OR [7] SHOULD BE CENTERED BETWEEN BOTH ENDS OF EACH CITY BLOCK AND SHALL BE PLACED SO THEY LINE UP ACROSS FROM EACH OTHER.
4. USE LARGE ARROW SIZE FOR BOTH RURAL AND URBAN LOCATIONS. (SEE LAST PAGE OF SECTION 780x FOR SYMBOLS TABLE)
5. LANE LINE EXTENSIONS SHALL BE THE SAME COLOR AND WIDTH AS THE LANE LINE BEING EXTENDED.

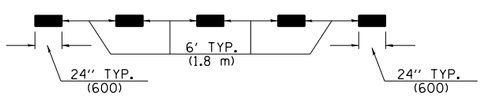

LANE LINE EXTENSIONS

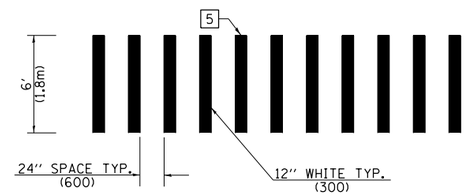

CROSSWALK DETAIL
(DECATUR CITY LIMITS ONLY)

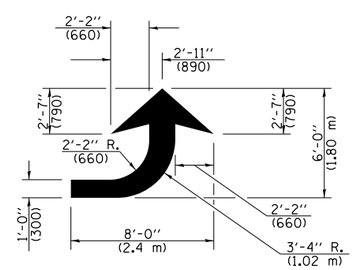

LEFT ARROW
REVERSE FOR RIGHT ARROW
AREA = 15.6 SQ. FT. (1.47 m^2)
(WHITE)

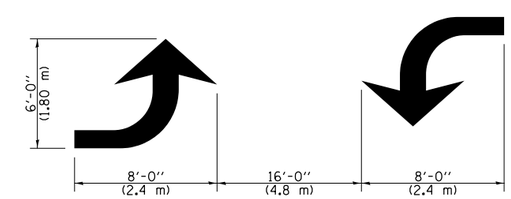

TYPICAL DOUBLE
TURN ARROWS (WHITE)

NOT TO SCALE

Note: All dimensions are in INCHES (millimeters) unless otherwise shown.

DISTRICT 7 DETAIL NO. 78000001

FILE NAME = c:\pw_work\pwidot\steffenmk\d0158776\D774423-sht-details.dgn	USER NAME = steffenmk	DESIGNED -	REVISED -
		DRAWN -	REVISED -
	PLOT SCALE = 100.0000 ' / in.	CHECKED -	REVISED -
	PLOT DATE = 5/7/2014	DATE -	REVISED -

STATE OF ILLINOIS
DEPARTMENT OF TRANSPORTATION

PAVEMENT MARKING AND RAISED REFLECTIVE PAVEMENT MARKERS (RURAL & URBAN APPLICATIONS)

SCALE: | SHEET NO. 2 OF 4 SHEETS | STA. | TO STA.

F.A.P. RTE.	SECTION	COUNTY	TOTAL SHEETS	SHEET NO.
91	5N	Coles	271	126

CONTRACT NO. 74423

ILLINOIS FED. AID PROJECT

ISLAND

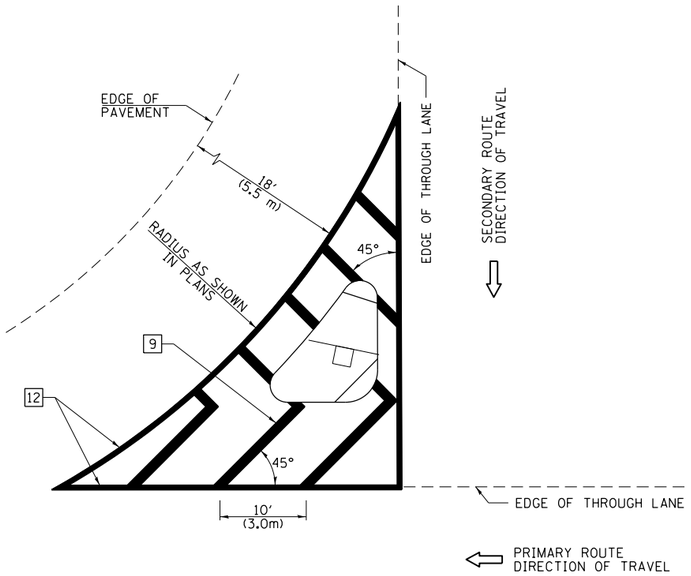

GENERAL NOTES

1. RAISED AND CORRUGATED MEDIANS SHALL BE OUTLINED WITH [2] IF PRESENT.
2. SOME OF THE INFORMATION INCLUDED WITH THIS DETAIL MAY NOT BE APPLICABLE TO THIS IMPROVEMENT.
3. PAVEMENT MARKINGS ARE TO BE EXTENDED THROUGH OMISSIONS WHEN APPLICABLE.
4. FINAL PAVEMENT MARKINGS SHALL BE IN PLACE PRIOR TO PLACING ANY RAISED REFLECTIVE PAVEMENT MARKERS.
5. THE FOLLOWING CRITERIA SHALL BE USED FOR SELECTING THE DIAGONAL PAVEMENT MARKING SPACING:

< 30 MPH	(< 50 km/h)	15′ (4.5 m)
30-45 MPH	(50-75 km/h	20′ (6.0 m)
> 45 MPH	(> 75 km/h	30′ (9.0 m)

PAVEMENT MARKING LEGEND

1. 4″ (100) SKIP-DASH (YELLOW)
2. 4″ (100) SOLID (YELLOW)
3. 12″ (300) DIAGONAL (YELLOW)
4. 4″ (100) DOUBLE YELLOW (NARROW)
5. 12″ (300) SOLID WHITE
6. RESERVED
7. 6″ (150) SKIP-DASH (WHITE)
8. 4″ (100) SOLID (WHITE)
9. 12″ (300) DIAGONAL (WHITE)
10. 6″ (150) SOLID (WHITE)
11. 24″ (600) STOP BAR (WHITE)
12. 8″ (200) SOLID (WHITE)
13. 4″ (100) PARKING WHITE

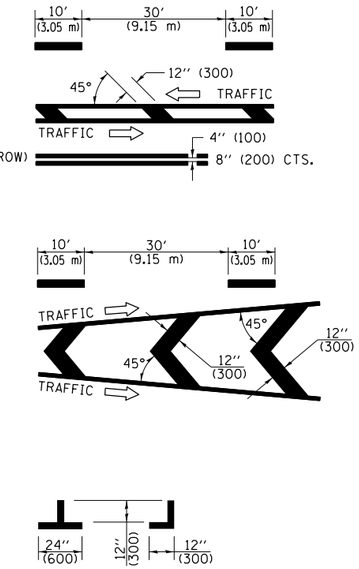

RURAL LEFT TURN STRIPING

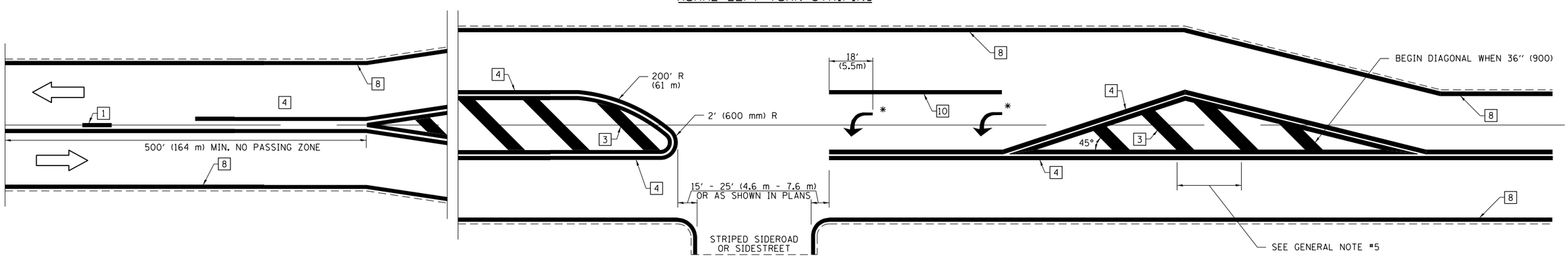

* PLACE AN ARROW 18′ (5.5 m) BACK FROM STOP BAR. PLACE ANOTHER ARROW EVEN WITH THE BEGINNING OF THE SOLID WHITE LINE. SPACE ADDITIONAL ARROWS EVENLY UP TO 80′ (24.4 m) MAXIMUM SPACING. USE MINIMUM OF 2 ARROWS.

NOT TO SCALE

Note: All dimensions are in INCHES (millimeters) unless otherwise shown.

DISTRICT 7 DETAIL NO. 78000001

FILE NAME = c:\pw_work\pwidot\steffenmk\d0158776\D774423-sht-details.dgn	USER NAME = steffenmk	DESIGNED -	REVISED -
		DRAWN -	REVISED -
	PLOT SCALE = 100.0000 ′ / in.	CHECKED -	REVISED -
	PLOT DATE = 5/7/2014	DATE -	REVISED -

STATE OF ILLINOIS
DEPARTMENT OF TRANSPORTATION

PAVEMENT MARKING AND RAISED REFLECTIVE PAVEMENT MARKERS (RURAL & URBAN APPLICATIONS)

SCALE: | SHEET NO. 3 OF 4 SHEETS | STA. | TO STA.

F.A.P. RTE.	SECTION	COUNTY	TOTAL SHEETS	SHEET NO.
91	5N	Coles	271	127

CONTRACT NO. 74423

ILLINOIS FED. AID PROJECT

PAVEMENT MARKINGS AT RAILROAD-HIGHWAY GRADE CROSSING

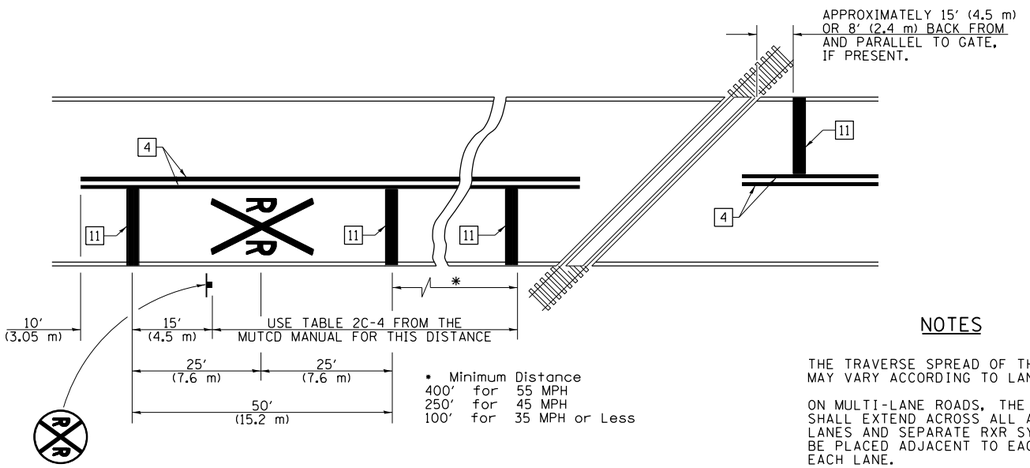

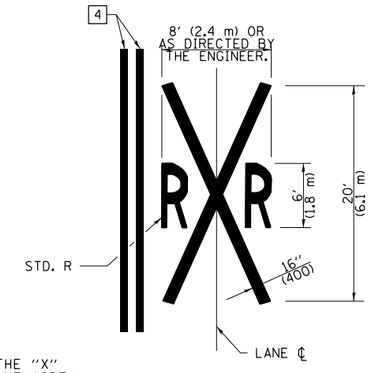

NOTES

THE TRAVERSE SPREAD OF THE "X" MAY VARY ACCORDING TO LANE WIDTH.

ON MULTI-LANE ROADS, THE STOP LINES SHALL EXTEND ACROSS ALL APPROACH LANES AND SEPARATE RXR SYMBOLS SHALL BE PLACED ADJACENT TO EACH OTHER IN EACH LANE.

WHEN THE PAVEMENT MARKING SYMBOL IS USED, A PORTION OF THE SYMBOL SHOULD BE LOCATED DIRECTLY ADJACENT TO THE ADVANCE WARNING SIGN (W10-1) AS PLACED BY TABLE II-1, CONDITION B OF THE MUTCD.

PAVEMENT MARKING LEGEND

1	4" (100) SKIP-DASH (YELLOW)
2	4" (100) SOLID (YELLOW)
3	12" (300) DIAGONAL (YELLOW)
4	4" (100) DOUBLE YELLOW (NARROW)
5	12" (300) SOLID WHITE
6	RESERVED
7	6" (150) SKIP-DASH (WHITE)
8	4" (100) SOLID (WHITE)
9	12" (300) DIAGONAL (WHITE)
10	6" (150) SOLID (WHITE)
11	24" (600) STOP BAR (WHITE)
12	8" (200) SOLID (WHITE)
13	4" (100) PARKING WHITE

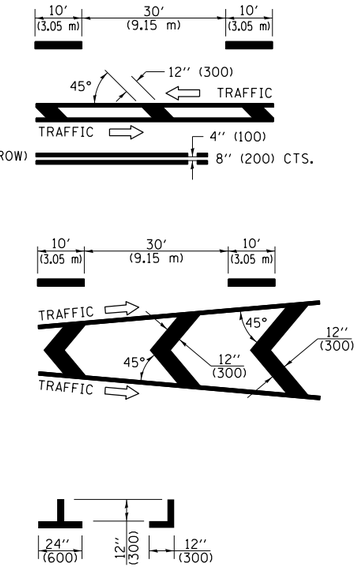

RAILROAD CROSSING WITH INTERCONNECT ONLY

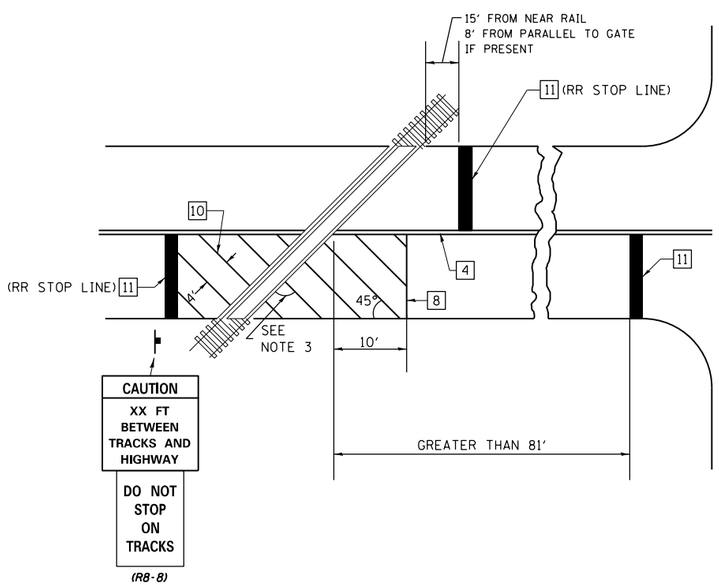

RAILROAD CROSSING WITH INTERCONNECT AND PRE-SIGNALS

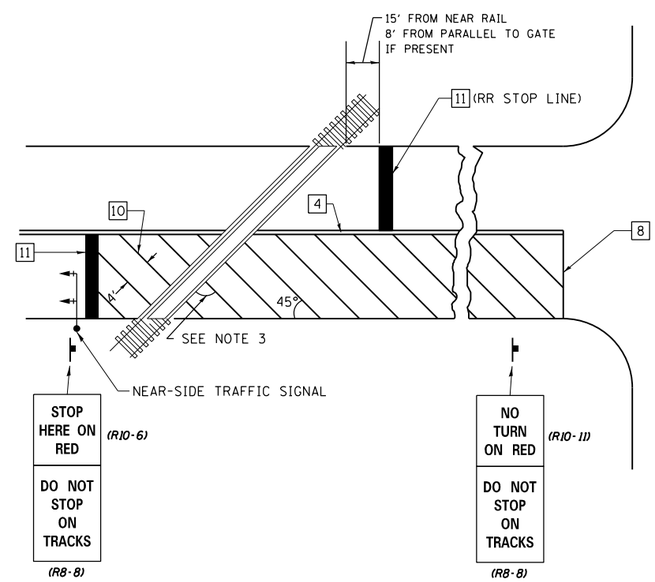

SUPPLEMENTAL PAVEMENT MARKING TREATMENT FOR RAILROAD-HIGHWAY GRADE CROSSING

GENERAL NOTES

1. SUPPLEMENTAL PAVEMENT MARKINGS TO BE INSTALLED ONLY ON APPROACHES TO INTERSECTIONS CONTROLLED BY TRAFFIC SIGNALS WHICH ARE INTERCONNECTED WITH THE RAILROAD WARNING SIGNALS.
2. EXTEND PAVEMENT MARKINGS TO THE INTERSECTION ONLY WHERE NEAR-SIDE TRAFFIC SIGNALS ARE USED.
3. WHERE THE ANGLE BETWEEN THE DIAGONAL PAVEMENT MARKINGS AND THE TRACK WOULD BE LESS THAN 20°, THE PAVEMENT MARKINGS SHOULD BE PLACED IN THE OPPOSITE DIRECTION FROM THAT SHOWN.

NOT TO SCALE

Note: All dimensions are in INCHES (millimeters) unless otherwise shown.

DISTRICT 7 DETAIL NO. 78000001

FILE NAME = c:\pw_work\pwidot\steffenmk\d0158776\D774423-sht-details.dgn	USER NAME = steffenmk	DESIGNED -	REVISED -
		DRAWN -	REVISED -
	PLOT SCALE = 100.0000 ' / in.	CHECKED -	REVISED -
	PLOT DATE = 5/7/2014	DATE -	REVISED -

STATE OF ILLINOIS
DEPARTMENT OF TRANSPORTATION

PAVEMENT MARKING AND RAISED REFLECTIVE PAVEMENT MARKERS
(RURAL & URBAN APPLICATIONS)

SCALE: | SHEET NO. 4 OF 4 SHEETS | STA. | TO STA.

F.A.P. RTE.	SECTION	COUNTY	TOTAL SHEETS	SHEET NO.
91	5N	Coles	271	128

CONTRACT NO. 74423

ILLINOIS FED. AID PROJECT

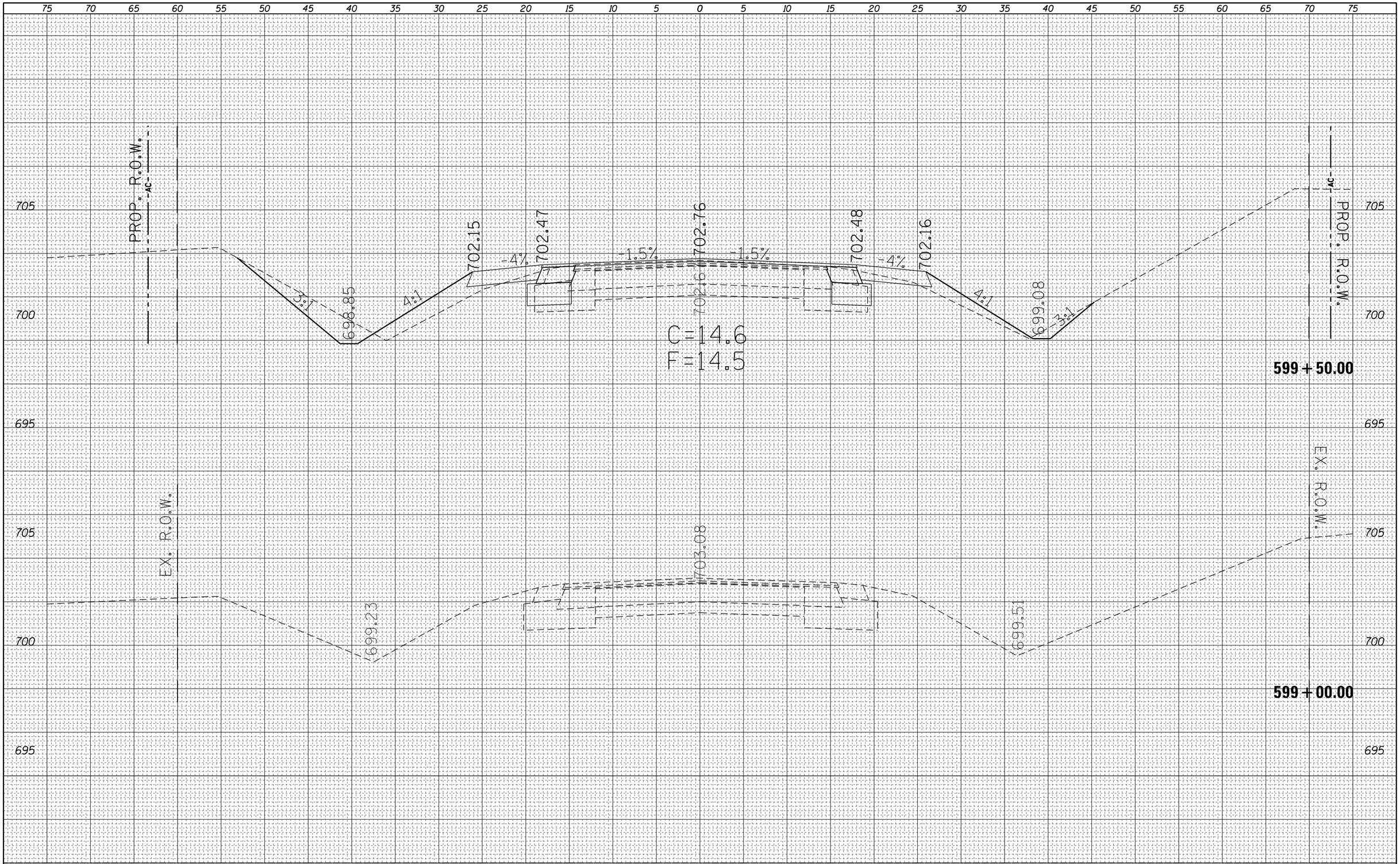

FINAL SURVEY		BY	DATE
NOTE BOOK	SURVEYED		
	PLOTTED		
	TEMPLATE		
	AREAS		
NO.	AREAS CHECKED		

ORIGINAL SURVEY		BY	DATE
NOTE BOOK	SURVEYED		
	PLOTTED		
	TEMPLATE		
	AREAS		
NO.	AREAS CHECKED		

FILE NAME = c:\pw_work\pwidot\steffenmk\d0158776\D774423	USER NAME = steffenmk	DESIGNED -	REVISED -
	sc-sht-IL16.dgn	DRAWN -	REVISED -
	PLOT SCALE = 10.0000 ' / in.	CHECKED -	REVISED -
Default	PLOT DATE = 5/7/2014	DATE -	REVISED -

STATE OF ILLINOIS
DEPARTMENT OF TRANSPORTATION

CROSS SECTIONS
IL. RTE. 16 MAINLINE

SCALE: 5 | SHEET 1 OF 19 SHEETS | STA. 599+00.00 TO STA. 599+50.00

F.A.P. RTE.	SECTION	COUNTY	TOTAL SHEETS	SHEET NO.
91	5N	Coles	271	129

CONTRACT NO. 74423

ILLINOIS FED. AID PROJECT

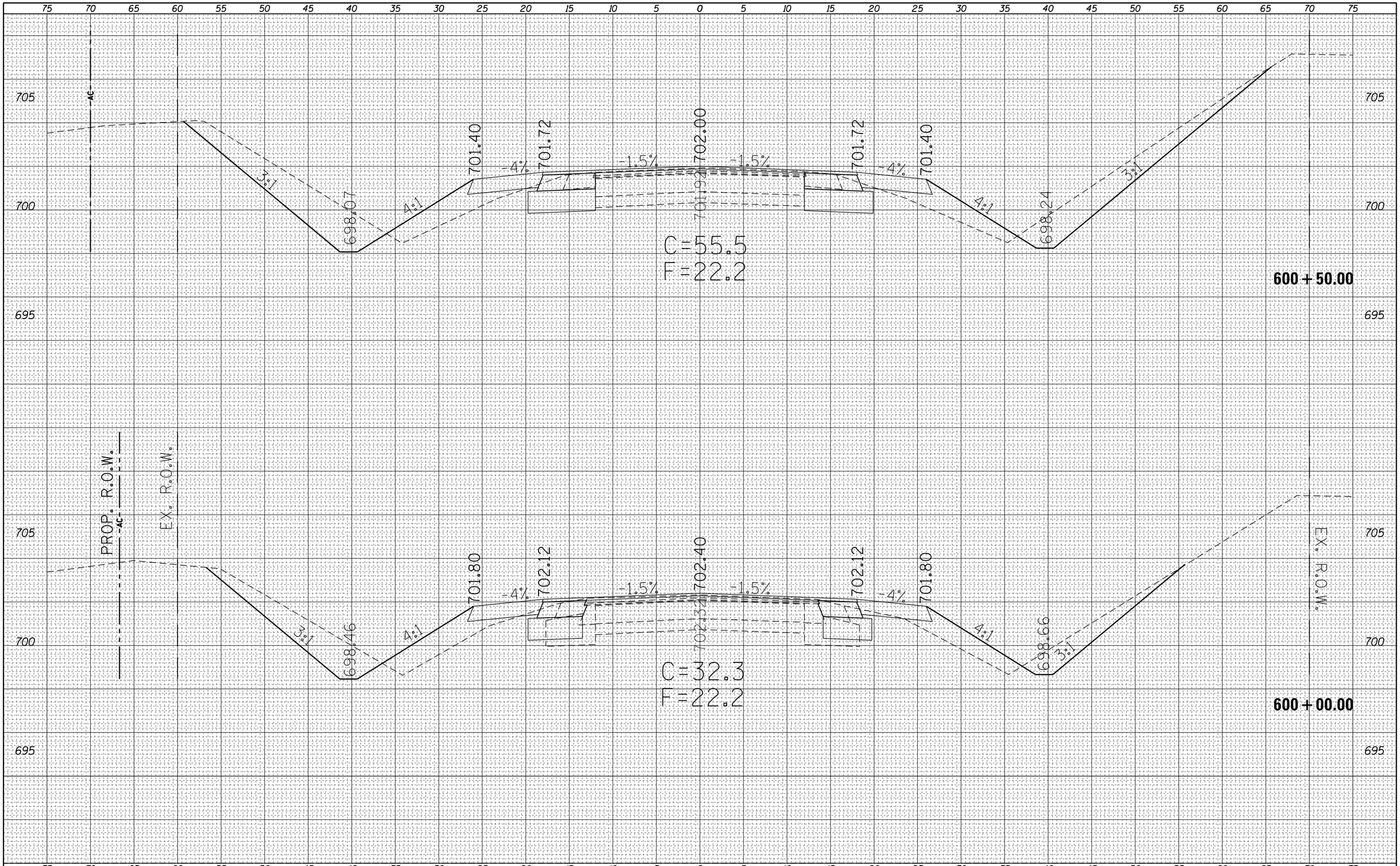

FINAL SURVEY		BY	DATE
NOTE BOOK	SURVEYED		
	PLOTTED		
	TEMPLATE		
	AREAS		
	AREAS CHECKED		
NO.			

ORIGINAL SURVEY		BY	DATE
NOTE BOOK	SURVEYED		
	PLOTTED		
	TEMPLATE		
	AREAS		
	AREAS CHECKED		
NO.			

FILE NAME =	USER NAME = steffenmk	DESIGNED -	REVISED -
c:\pw_work\pwidot\steffenmk\d0158776\D774423 xsc-sht-IL16.dgn		DRAWN -	REVISED -
	PLOT SCALE = 10.0000 ' / in.	CHECKED -	REVISED -
Default	PLOT DATE = 5/7/2014	DATE -	REVISED -

STATE OF ILLINOIS
DEPARTMENT OF TRANSPORTATION

CROSS SECTIONS
IL. RTE. 16 MAINLINE

SCALE: 5 | SHEET 2 OF 19 SHEETS | STA. 600+00.00 TO STA. 600+50.00

F.A.P. RTE.	SECTION	COUNTY	TOTAL SHEETS	SHEET NO.
91	5N	Coles	271	130
		CONTRACT NO. 74423		
		ILLINOIS FED. AID PROJECT		

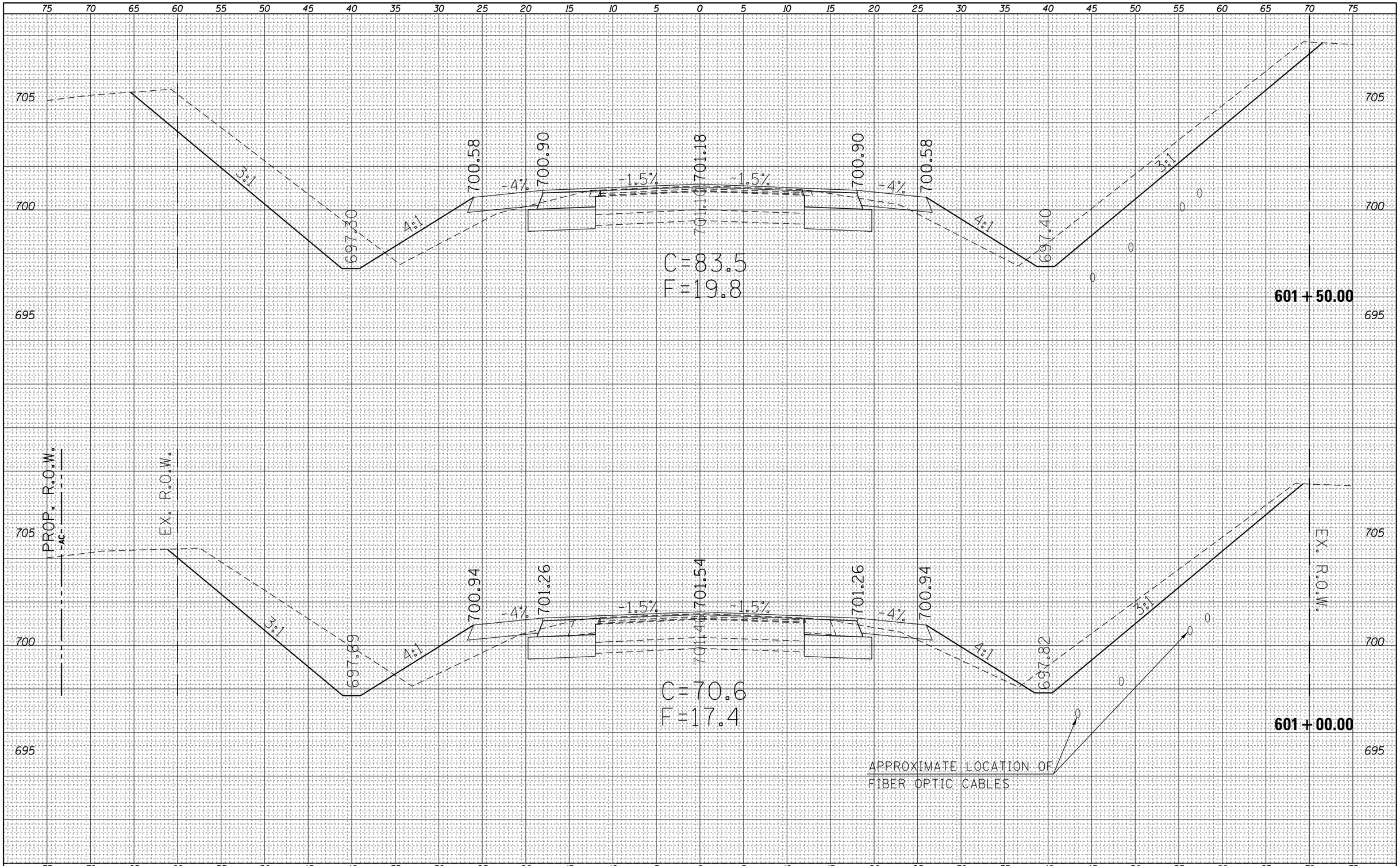

FINAL SURVEY		BY	DATE
NOTE BOOK	SURVEYED		
	PLOTTED		
	TEMPLATE		
	AREAS		
	AREAS CHECKED		
NO.			

ORIGINAL SURVEY		BY	DATE
NOTE BOOK	SURVEYED		
	PLOTTED		
	TEMPLATE		
	AREAS		
	AREAS CHECKED		
NO.			

FILE NAME =	USER NAME = steffenmk	DESIGNED -	REVISED -
c:\pw_work\pwidot\steffenmk\d0158776\D774423 xsc-sht-IL16.dgn		DRAWN -	REVISED -
	PLOT SCALE = 10.0000 ' / in.	CHECKED -	REVISED -
Default	PLOT DATE = 5/7/2014	DATE -	REVISED -

STATE OF ILLINOIS
DEPARTMENT OF TRANSPORTATION

CROSS SECTIONS
IL. RTE. 16 MAINLINE

SCALE: 5 | SHEET 3 OF 19 SHEETS | STA. 601+00.00 TO STA. 601+50.00

F.A.P. RTE.	SECTION	COUNTY	TOTAL SHEETS	SHEET NO.
91	5N	Coles	271	131

CONTRACT NO. 74423

ILLINOIS FED. AID PROJECT

FINAL SURVEY		BY	DATE
NOTE BOOK	SURVEYED		
	PLOTTED		
	TEMPLATE		
	AREAS		
NO.	AREAS CHECKED		

ORIGINAL SURVEY		BY	DATE
NOTE BOOK	SURVEYED		
	PLOTTED		
	TEMPLATE		
	AREAS		
NO.	AREAS CHECKED		

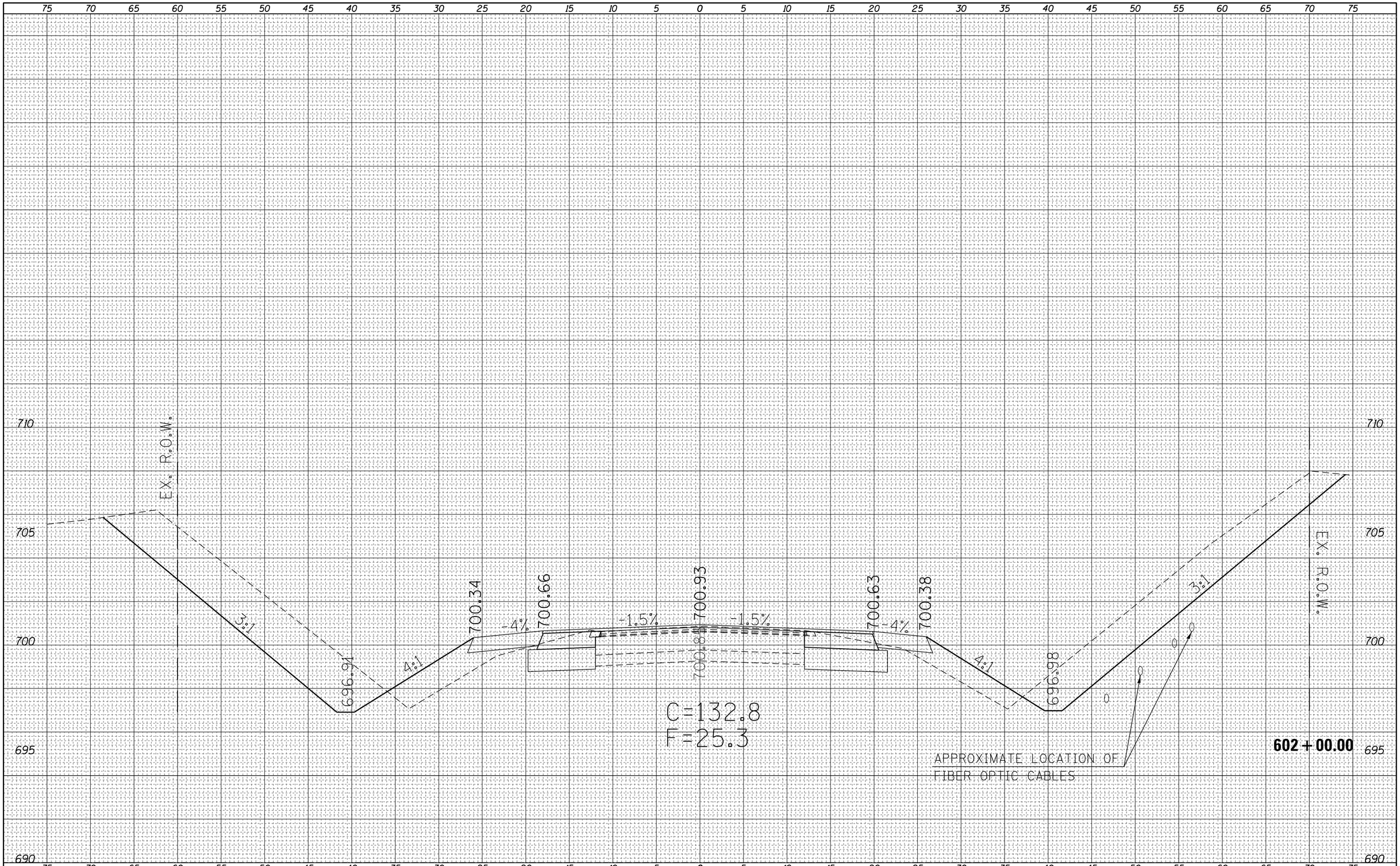

FILE NAME = c:\pw_work\pwidot\steffenmk\d0158776\D774423	USER NAME = steffenmk	DESIGNED -	REVISED -
	sc-sht-IL16.dgn	DRAWN -	REVISED -
	PLOT SCALE = 10.0000 ' / in.	CHECKED -	REVISED -
Default	PLOT DATE = 5/7/2014	DATE -	REVISED -

STATE OF ILLINOIS
DEPARTMENT OF TRANSPORTATION

CROSS SECTIONS
IL. RTE. 16 MAINLINE

SCALE: 5 | SHEET 4 OF 19 SHEETS | STA. 602+00.00 TO STA. 602+00.00

F.A.P. RTE.	SECTION	COUNTY	TOTAL SHEETS	SHEET NO.
91	5N	Coles	271	132

CONTRACT NO. 74423

ILLINOIS FED. AID PROJECT

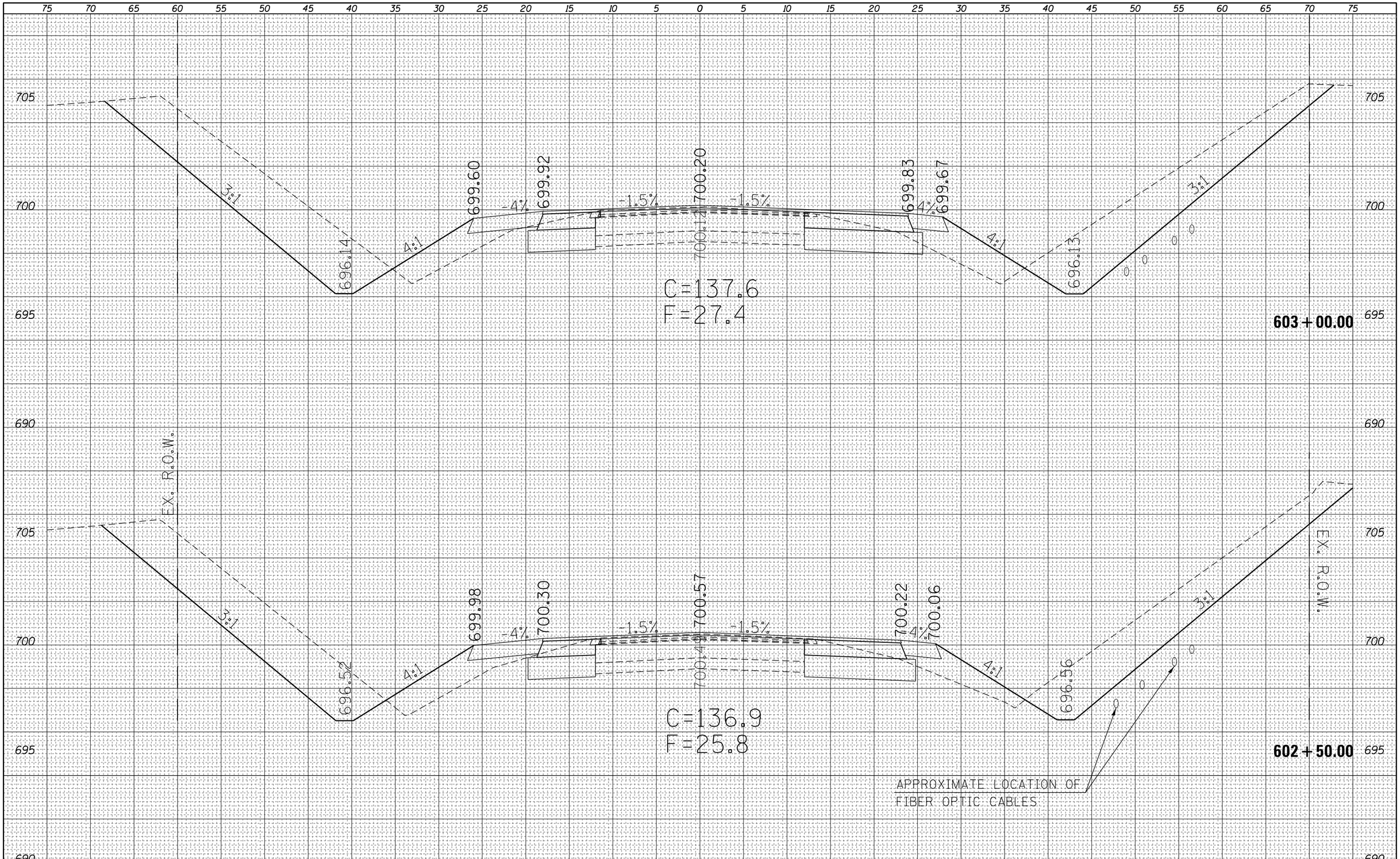

FINAL SURVEY		BY	DATE
NOTE BOOK	SURVEYED		
	PLOTTED		
	TEMPLATE		
	AREAS		
NO.	AREAS CHECKED		

ORIGINAL SURVEY		BY	DATE
NOTE BOOK	SURVEYED		
	PLOTTED		
	TEMPLATE		
	AREAS		
NO.	AREAS CHECKED		

FILE NAME = c:\pw_work\pwidot\steffenmk\d0158776\D774423	USER NAME = steffenmk	DESIGNED -	REVISED -
		DRAWN -	REVISED -
	PLOT SCALE = 10.0000 ' / in.	CHECKED -	REVISED -
Default	PLOT DATE = 5/7/2014	DATE -	REVISED -

STATE OF ILLINOIS
DEPARTMENT OF TRANSPORTATION

CROSS SECTIONS
IL. RTE. 16 MAINLINE

SCALE: 5 | SHEET 5 OF 19 SHEETS | STA. 602+50.00 TO STA. 603+00.00

F.A.P. RTE.	SECTION	COUNTY	TOTAL SHEETS	SHEET NO.
91	5N	Coles	271	133

CONTRACT NO. 74423

ILLINOIS FED. AID PROJECT

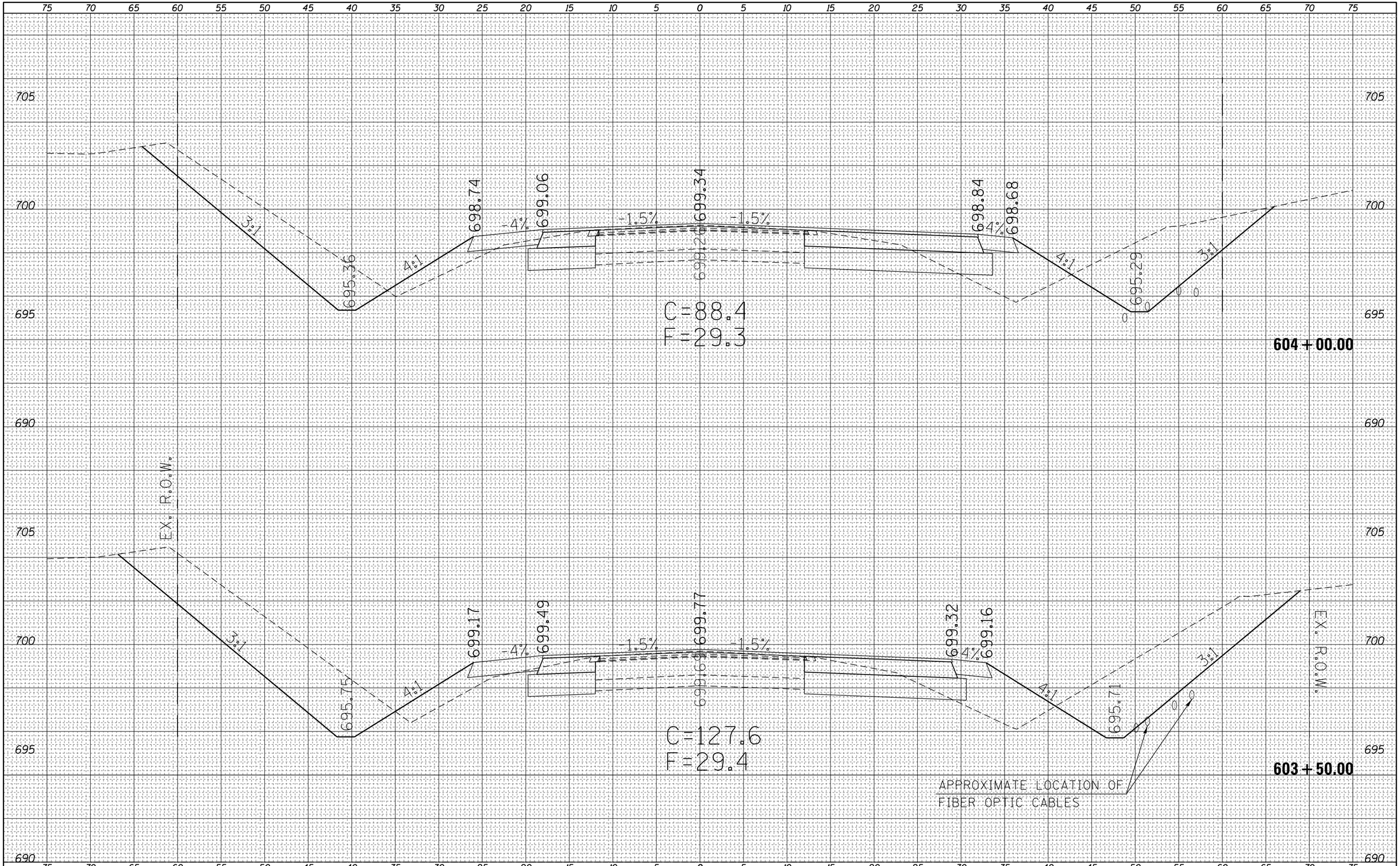

FINAL SURVEY		BY	DATE
NOTE BOOK	SURVEYED		
	PLOTTED		
	TEMPLATE		
	AREAS		
NO.	AREAS CHECKED		

ORIGINAL SURVEY		BY	DATE
NOTE BOOK	SURVEYED		
	PLOTTED		
	TEMPLATE		
	AREAS		
NO.	AREAS CHECKED		

FILE NAME = c:\pw_work\pwidot\steffenmk\d0158776\D774423 sc-sht-IL16.dgn	USER NAME = steffenmk	DESIGNED -	REVISED -
		DRAWN -	REVISED -
	PLOT SCALE = 10.0000 ' / in.	CHECKED -	REVISED -
Default	PLOT DATE = 5/7/2014	DATE -	REVISED -

STATE OF ILLINOIS
DEPARTMENT OF TRANSPORTATION

CROSS SECTIONS
IL. RTE. 16 MAINLINE

SCALE: 5 | SHEET 6 OF 19 SHEETS | STA. 603+50.00 TO STA. 604+00.00

F.A.P. RTE.	SECTION	COUNTY	TOTAL SHEETS	SHEET NO.
91	5N	Coles	271	134

CONTRACT NO. 74423

ILLINOIS FED. AID PROJECT

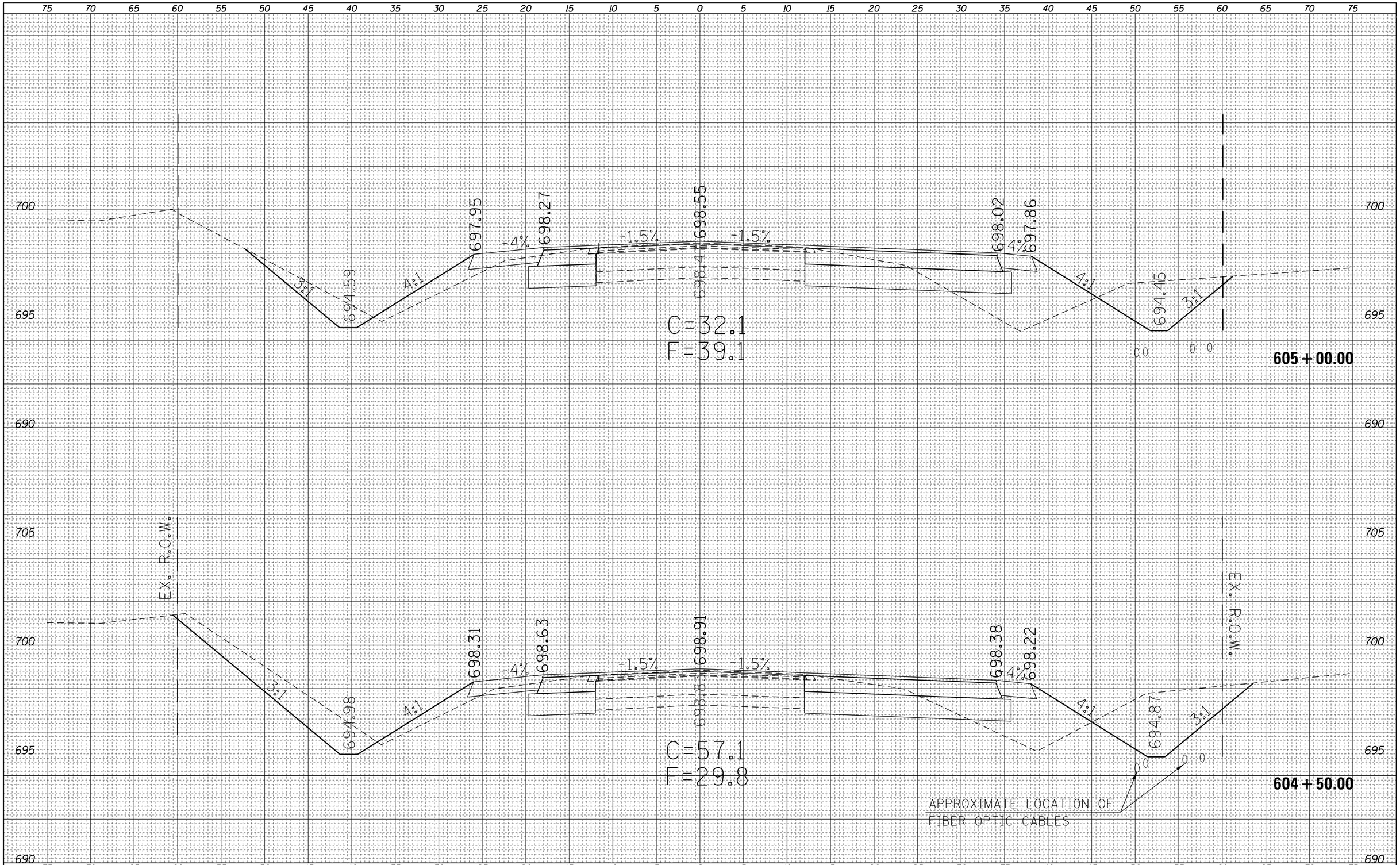

FINAL SURVEY		BY	DATE
NOTE BOOK	SURVEYED		
	PLOTTED		
	TEMPLATE		
	AREAS		
NO.	AREAS CHECKED		

ORIGINAL SURVEY		BY	DATE
NOTE BOOK	SURVEYED		
	PLOTTED		
	TEMPLATE		
	AREAS		
NO.	AREAS CHECKED		

FILE NAME = c:\pw_work\pwidot\steffenmk\d0158776\D774423	USER NAME = steffenmk	DESIGNED -	REVISED -
	sc-sht-IL16.dgn	DRAWN -	REVISED -
	PLOT SCALE = 10.0000 ' / in.	CHECKED -	REVISED -
Default	PLOT DATE = 5/7/2014	DATE -	REVISED -

STATE OF ILLINOIS
DEPARTMENT OF TRANSPORTATION

CROSS SECTIONS
IL. RTE. 16 MAINLINE

SCALE: 5 | SHEET 7 OF 19 SHEETS | STA. 604+50.00 TO STA. 605+00.00

F.A.P. RTE.	SECTION	COUNTY	TOTAL SHEETS	SHEET NO.
91	5N	Coles	271	135

CONTRACT NO. 74423

ILLINOIS FED. AID PROJECT

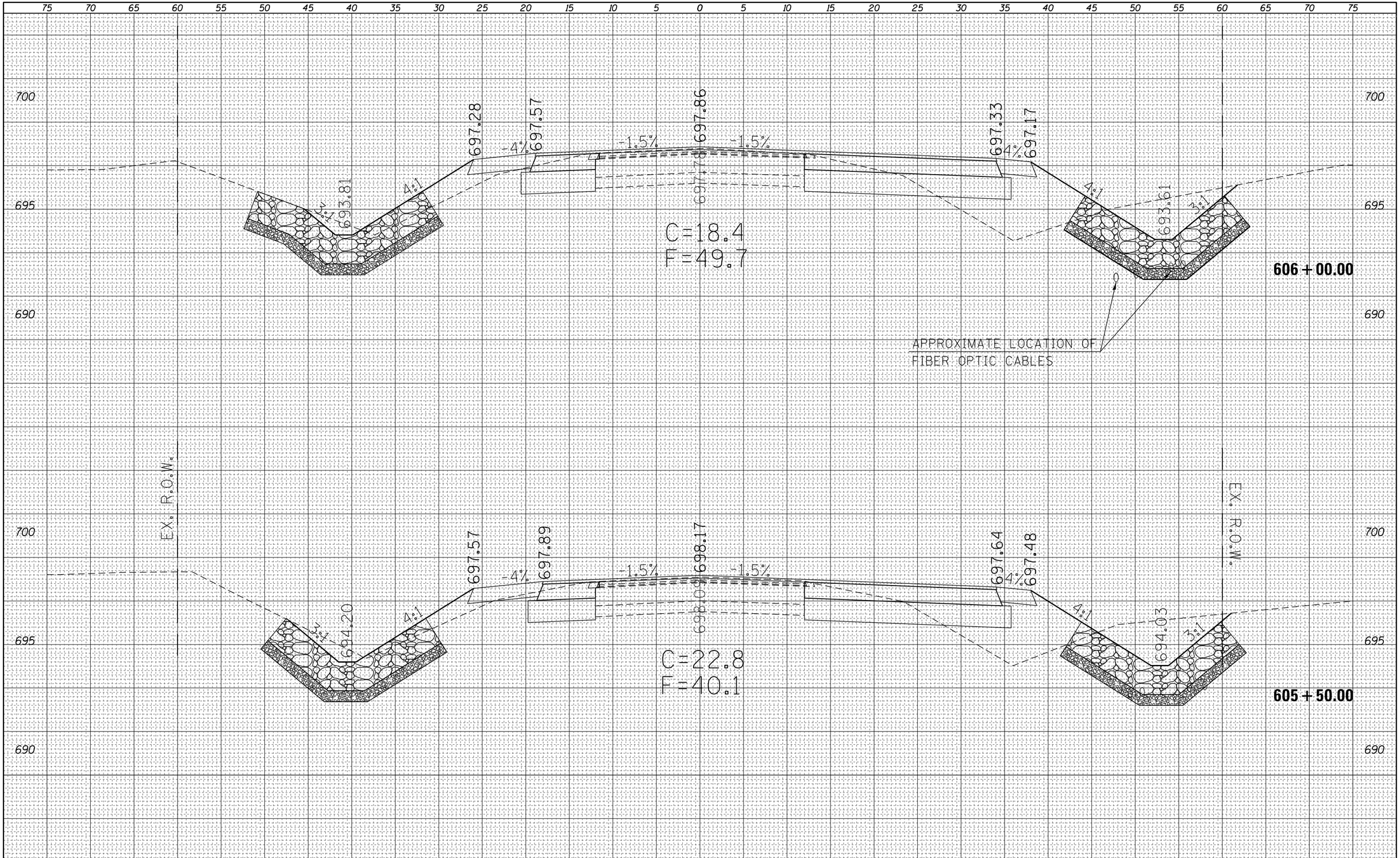

FINAL SURVEY		BY	DATE
NOTE BOOK	SURVEYED		
	PLOTTED		
	TEMPLATE		
	AREAS		
NO.	AREAS CHECKED		

ORIGINAL SURVEY		BY	DATE
NOTE BOOK	SURVEYED		
	PLOTTED		
	TEMPLATE		
	AREAS		
NO.	AREAS CHECKED		

FILE NAME = c:\pw_work\pwidot\steffenmk\d0158776\D774423 xsc-sht-IL16.dgn	USER NAME = steffenmk	DESIGNED -	REVISED -
		DRAWN -	REVISED -
	PLOT SCALE = 10.0000 ' / in.	CHECKED -	REVISED -
Default	PLOT DATE = 5/7/2014	DATE -	REVISED -

STATE OF ILLINOIS
DEPARTMENT OF TRANSPORTATION

CROSS SECTIONS
IL. RTE. 16 MAINLINE

SCALE: 5 | SHEET 8 OF 19 SHEETS | STA. 605+50.00 TO STA. 606+00.00

F.A.P. RTE.	SECTION	COUNTY	TOTAL SHEETS	SHEET NO.
91	5N	Coles	271	136

CONTRACT NO. 74423

ILLINOIS FED. AID PROJECT

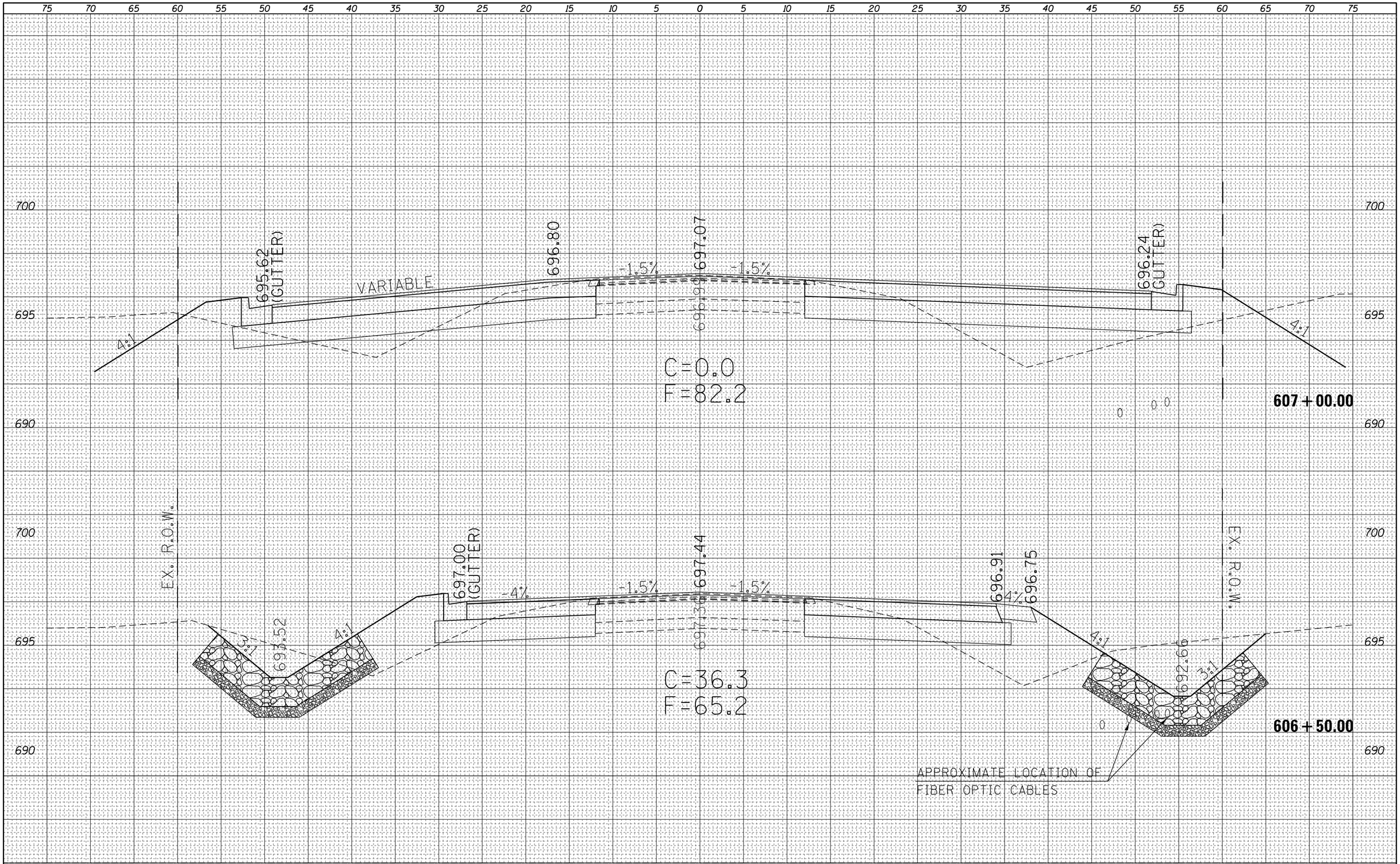

FINAL SURVEY		BY	DATE
NOTE BOOK	SURVEYED		
	PLOTTED		
	TEMPLATE		
	AREAS		
NO.	AREAS CHECKED		

ORIGINAL SURVEY		BY	DATE
NOTE BOOK	SURVEYED		
	PLOTTED		
	TEMPLATE		
	AREAS		
NO.	AREAS CHECKED		

FILE NAME = c:\pw_work\pwidot\steffenmk\d0158776\D774423	USER NAME = steffenmk	DESIGNED -	REVISED -	STATE OF ILLINOIS DEPARTMENT OF TRANSPORTATION
	sc-sht-IL16.dgn	DRAWN -	REVISED -	
	PLOT SCALE = 10.0000 ' / in.	CHECKED -	REVISED -	
Default	PLOT DATE = 5/7/2014	DATE -	REVISED -	

CROSS SECTIONS
IL. RTE. 16 MAINLINE

SCALE: 5 | SHEET 9 OF 19 SHEETS | STA. 606+50.00 TO STA. 607+00.00

F.A.P. RTE.	SECTION	COUNTY	TOTAL SHEETS	SHEET NO.
91	5N	Coles	271	137

CONTRACT NO. 74423

ILLINOIS FED. AID PROJECT

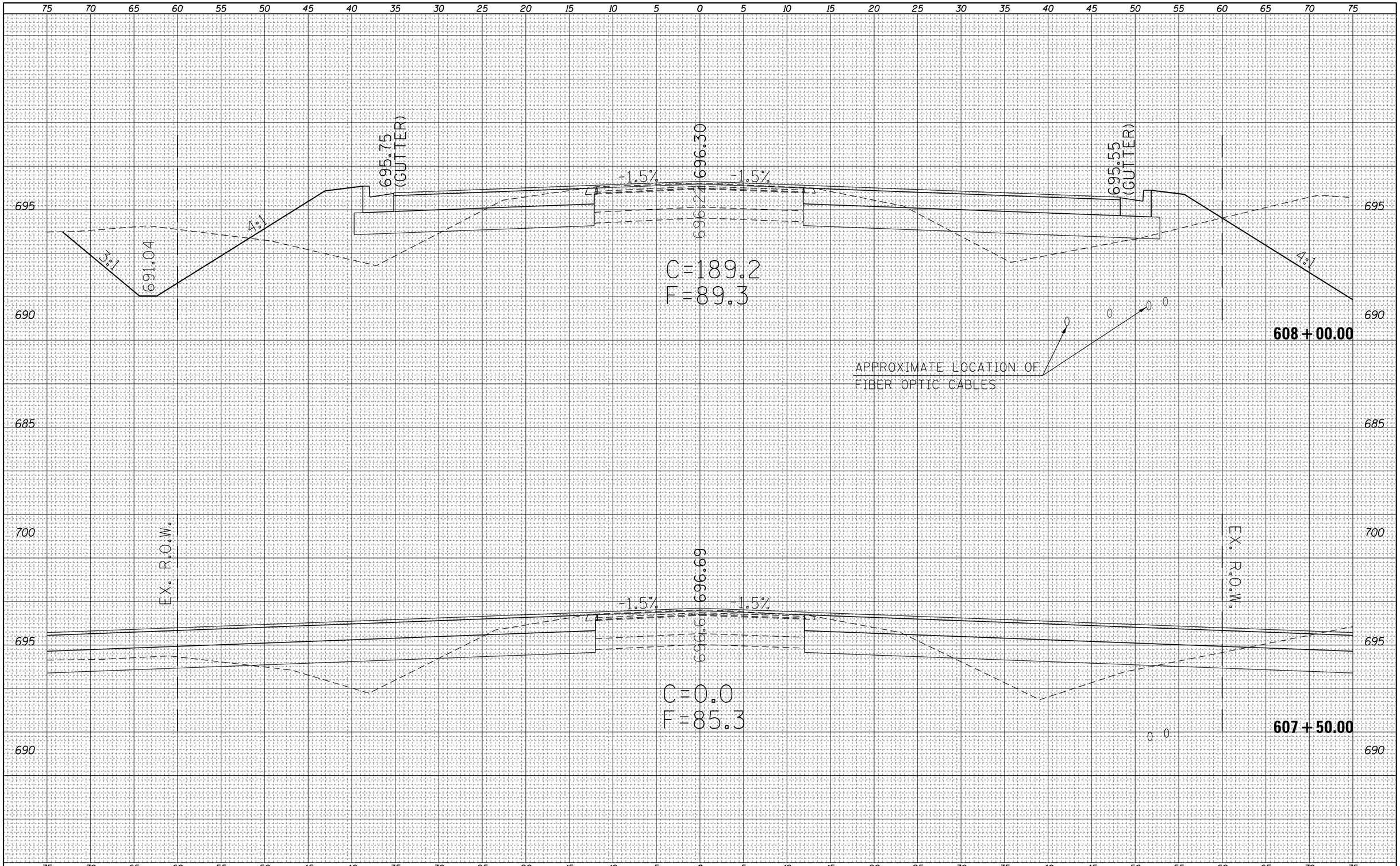

FINAL SURVEY		BY	DATE
NOTE BOOK	SURVEYED		
	PLOTTED		
	TEMPLATE		
	AREAS		
NO.	AREAS CHECKED		

ORIGINAL SURVEY		BY	DATE
NOTE BOOK	SURVEYED		
	PLOTTED		
	TEMPLATE		
	AREAS		
NO.	AREAS CHECKED		

FILE NAME = c:\pw_work\pwidot\steffenmk\d0158776\D774423	USER NAME = steffenmk	DESIGNED -	REVISED -
	sc-sht-IL16.dgn	DRAWN -	REVISED -
	PLOT SCALE = 10.0000 ' / in.	CHECKED -	REVISED -
Default	PLOT DATE = 5/7/2014	DATE -	REVISED -

STATE OF ILLINOIS
DEPARTMENT OF TRANSPORTATION

CROSS SECTIONS
IL. RTE. 16 MAINLINE

SCALE: 5 | SHEET 10 OF 19 SHEETS | STA. 607+50.00 TO STA. 608+00.00

F.A.P. RTE.	SECTION	COUNTY	TOTAL SHEETS	SHEET NO.
91	5N	Coles	271	138

CONTRACT NO. 74423

ILLINOIS FED. AID PROJECT

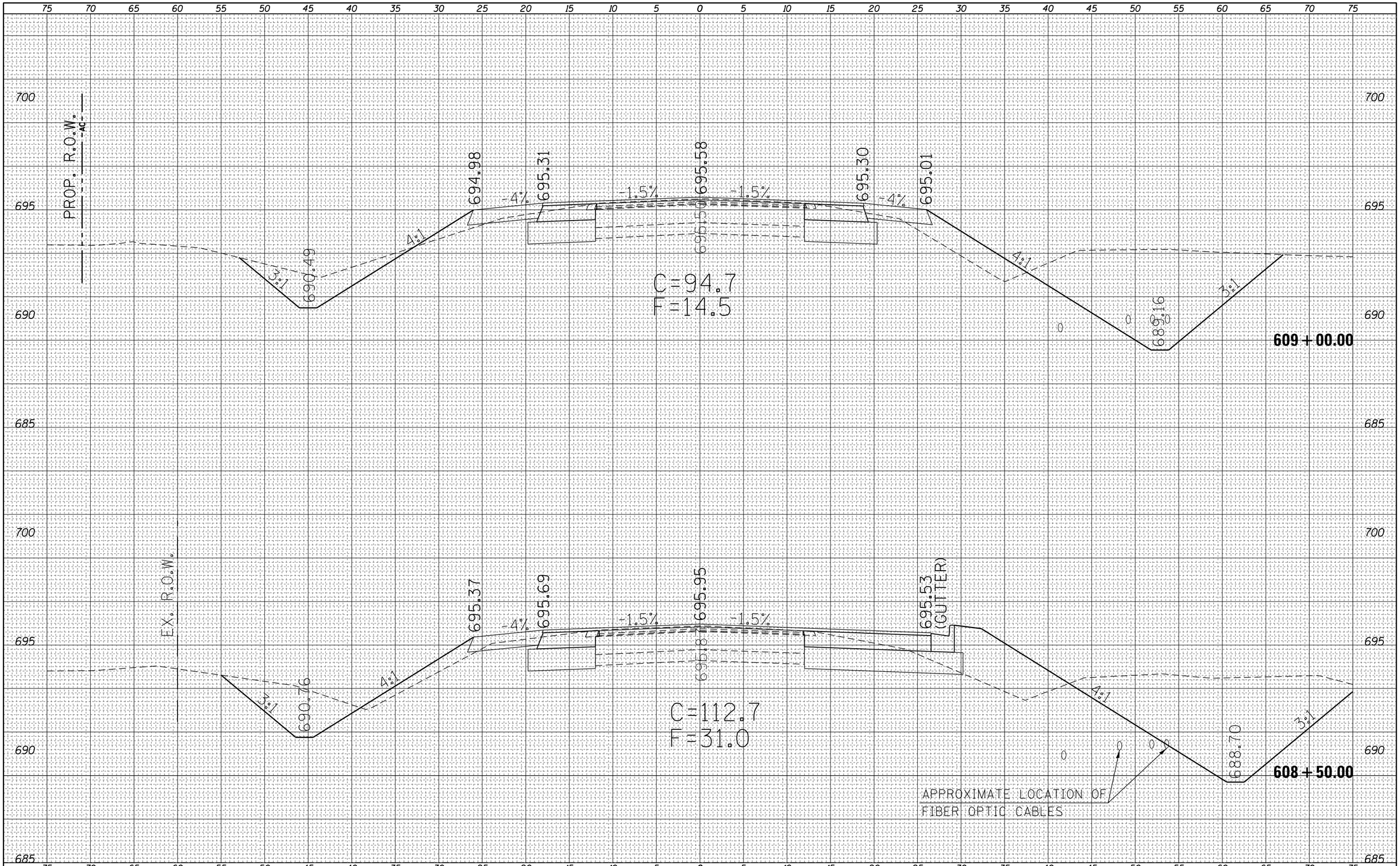

FINAL SURVEY	BY	DATE
SURVEYED		
PLOTTED		
TEMPLATE		
AREAS		
AREAS CHECKED		
NOTE BOOK NO.		

ORIGINAL SURVEY	BY	DATE
SURVEYED		
PLOTTED		
TEMPLATE		
AREAS		
AREAS CHECKED		
NOTE BOOK NO.		

FILE NAME = c:\pw_work\pwidot\steffenmk\d0158776\D774423	USER NAME = steffenmk	DESIGNED -	REVISED -
	sc-sht-IL16.dgn	DRAWN -	REVISED -
	PLOT SCALE = 10.0000 ' / in.	CHECKED -	REVISED -
Default	PLOT DATE = 5/7/2014	DATE -	REVISED -

STATE OF ILLINOIS
DEPARTMENT OF TRANSPORTATION

CROSS SECTIONS
IL. RTE. 16 MAINLINE

SCALE: 5 | SHEET 11 OF 19 SHEETS | STA. 608+50.00 TO STA. 609+00.00

F.A.P. RTE.	SECTION	COUNTY	TOTAL SHEETS	SHEET NO.
91	5N	Coles	271	139

CONTRACT NO. 74423

ILLINOIS FED. AID PROJECT

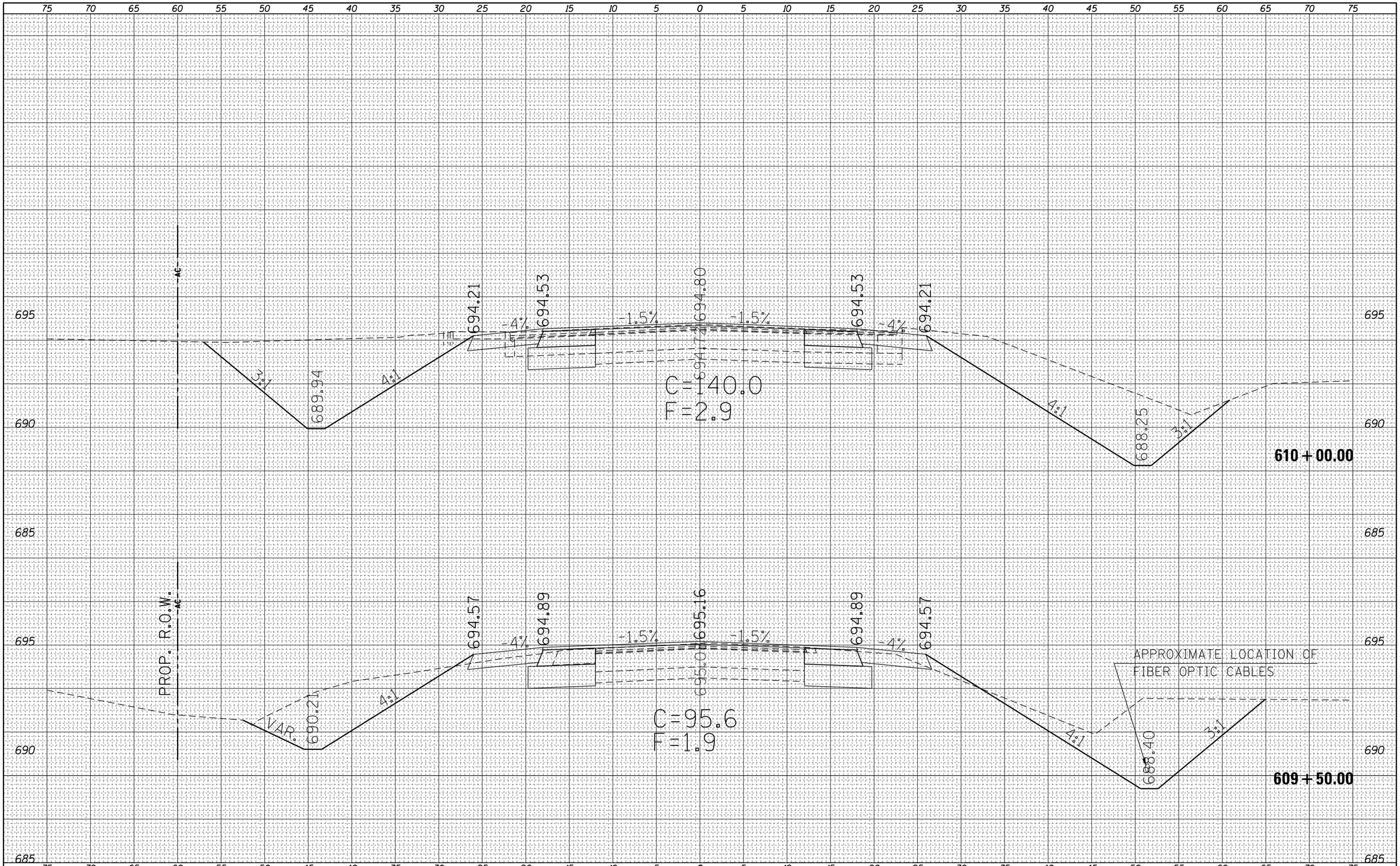

FINAL SURVEY		BY	DATE
NOTE BOOK	SURVEYED		
	PLOTTED		
	TEMPLATE		
	AREAS		
NO.	AREAS CHECKED		

ORIGINAL SURVEY		BY	DATE
NOTE BOOK	SURVEYED		
	PLOTTED		
	TEMPLATE		
	AREAS		
NO.	AREAS CHECKED		

FILE NAME = c:\pw_work\pwidot\steffenmk\d0158776\D774423	USER NAME = steffenmk	DESIGNED -	REVISED -
	sc-sht-IL16.dgn	DRAWN -	REVISED -
	PLOT SCALE = 10.0000 ' / in.	CHECKED -	REVISED -
Default	PLOT DATE = 5/7/2014	DATE -	REVISED -

STATE OF ILLINOIS
DEPARTMENT OF TRANSPORTATION

CROSS SECTIONS
IL. RTE. 16 MAINLINE

SCALE: 5 | SHEET 12 OF 19 SHEETS | STA. 609+50.00 TO STA. 610+00.00

F.A.P. RTE.	SECTION	COUNTY	TOTAL SHEETS	SHEET NO.
91	5N	Coles	271	140

CONTRACT NO. 74423

ILLINOIS FED. AID PROJECT

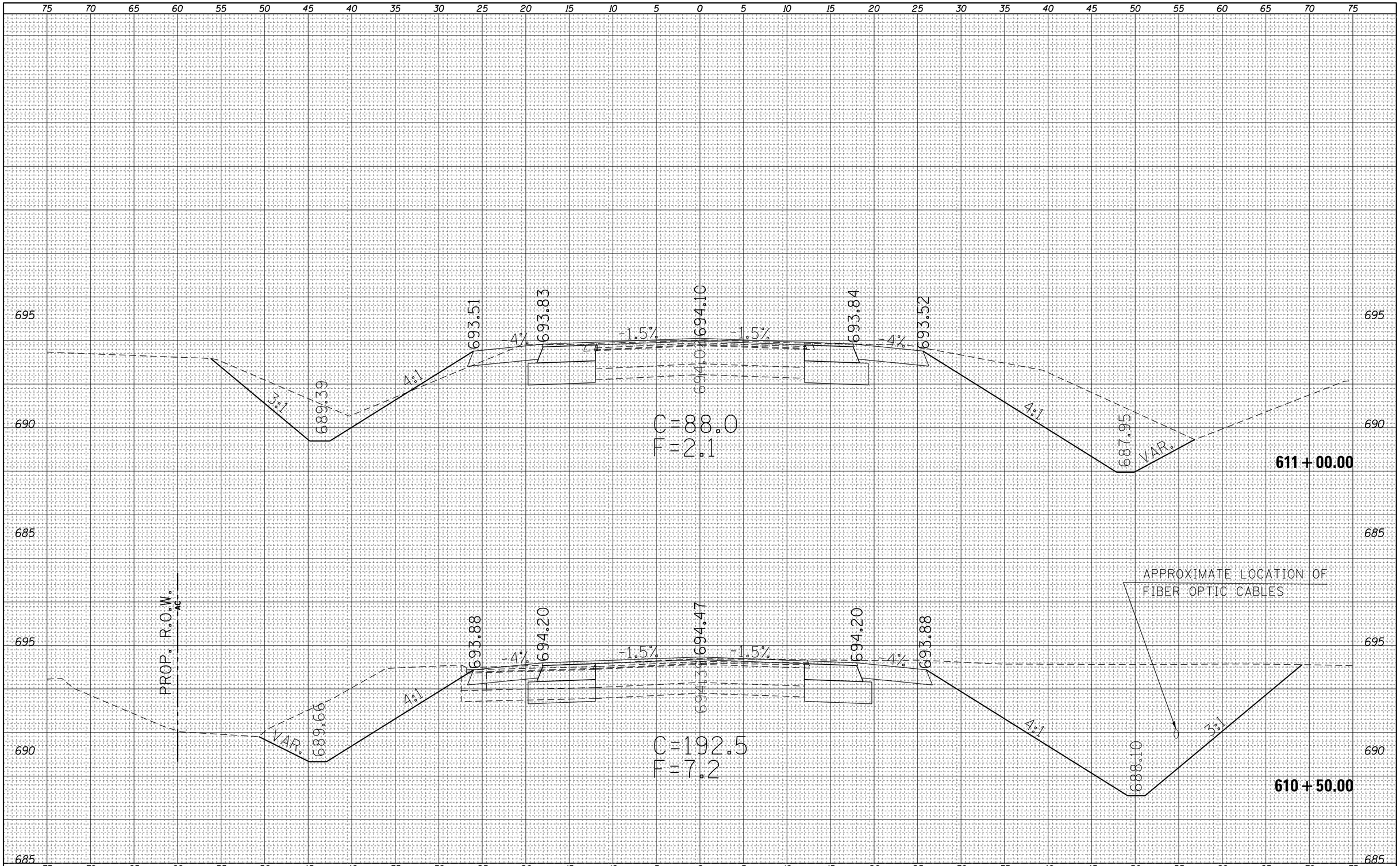

FINAL SURVEY		BY	DATE
NOTE BOOK	SURVEYED		
	PLOTTED		
	TEMPLATE		
	AREAS		
NO.	AREAS CHECKED		

ORIGINAL SURVEY		BY	DATE
NOTE BOOK	SURVEYED		
	PLOTTED		
	TEMPLATE		
	AREAS		
NO.	AREAS CHECKED		

FILE NAME = c:\pw_work\pwidot\steffenmk\d0158776\D774423	USER NAME = steffenmk	DESIGNED -	REVISED -
	sc-sht-IL16.dgn	DRAWN -	REVISED -
	PLOT SCALE = 10.0000 ' / in.	CHECKED -	REVISED -
Default	PLOT DATE = 5/7/2014	DATE -	REVISED -

STATE OF ILLINOIS
DEPARTMENT OF TRANSPORTATION

CROSS SECTIONS
IL. RTE. 16 MAINLINE

SCALE: 5 | SHEET 13 OF 19 SHEETS | STA. 610+50.00 TO STA. 611+00.00

F.A.P. RTE.	SECTION	COUNTY	TOTAL SHEETS	SHEET NO.
91	5N	Coles	271	141

CONTRACT NO. 74423

ILLINOIS FED. AID PROJECT

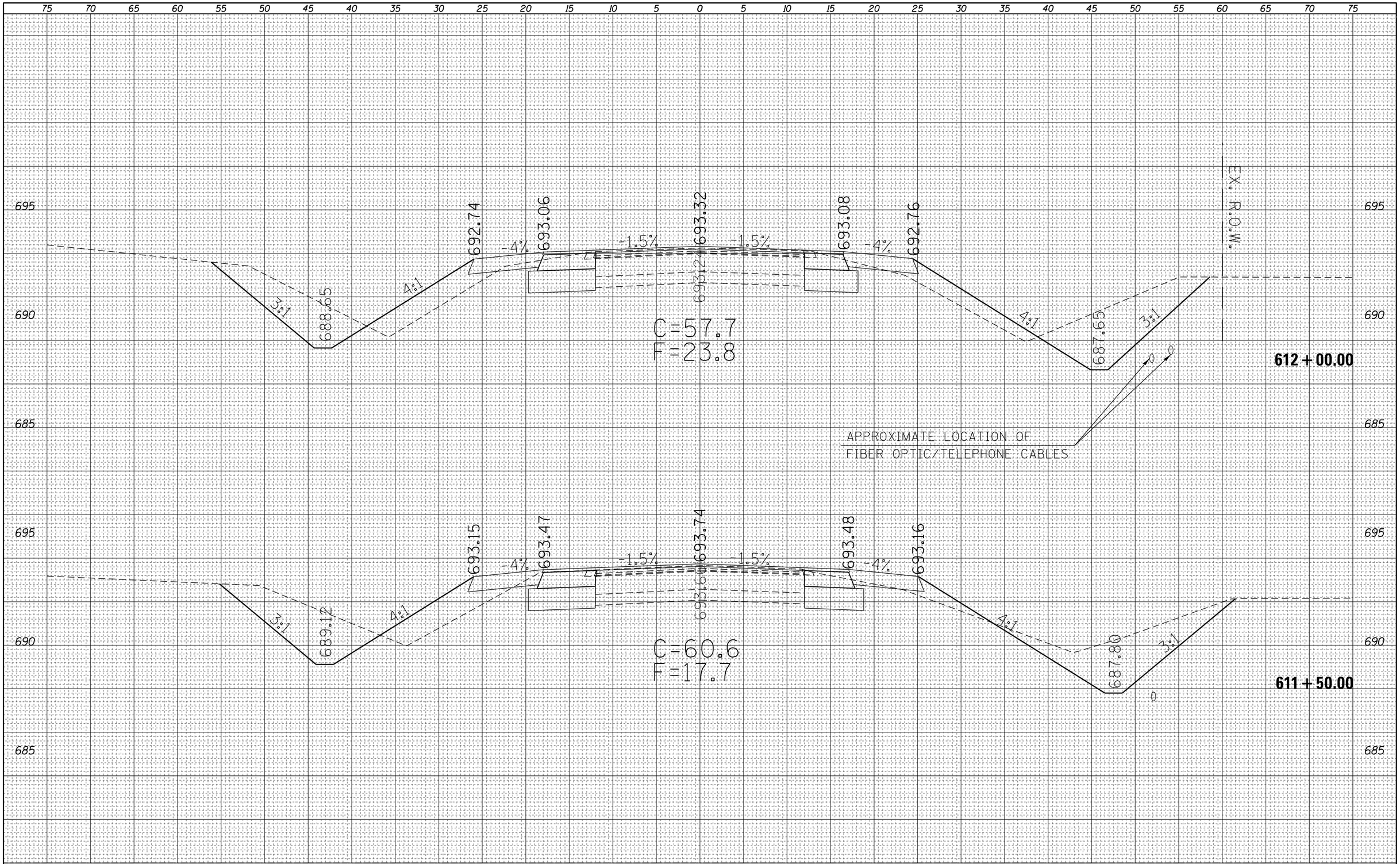

FINAL SURVEY		BY	DATE
NOTE BOOK	SURVEYED		
	PLOTTED		
	TEMPLATE		
	AREAS		
NO.	AREAS CHECKED		

ORIGINAL SURVEY		BY	DATE
NOTE BOOK	SURVEYED		
	PLOTTED		
	TEMPLATE		
	AREAS		
NO.	AREAS CHECKED		

FILE NAME =	USER NAME = steffenmk	DESIGNED -	REVISED -
c:\pw_work\pwidot\steffenmk\d0158776\D774423	sc-sht-IL16.dgn	DRAWN -	REVISED -
	PLOT SCALE = 10.0000 ' / in.	CHECKED -	REVISED -
Default	PLOT DATE = 5/7/2014	DATE -	REVISED -

STATE OF ILLINOIS
DEPARTMENT OF TRANSPORTATION

CROSS SECTIONS
IL. RTE. 16 MAINLINE

SCALE: 5 | SHEET 14 OF 19 SHEETS | STA. 611+50.00 TO STA. 612+00.00

F.A.P. RTE.	SECTION	COUNTY	TOTAL SHEETS	SHEET NO.
91	5N	Coles	271	142

CONTRACT NO. 74423

ILLINOIS FED. AID PROJECT

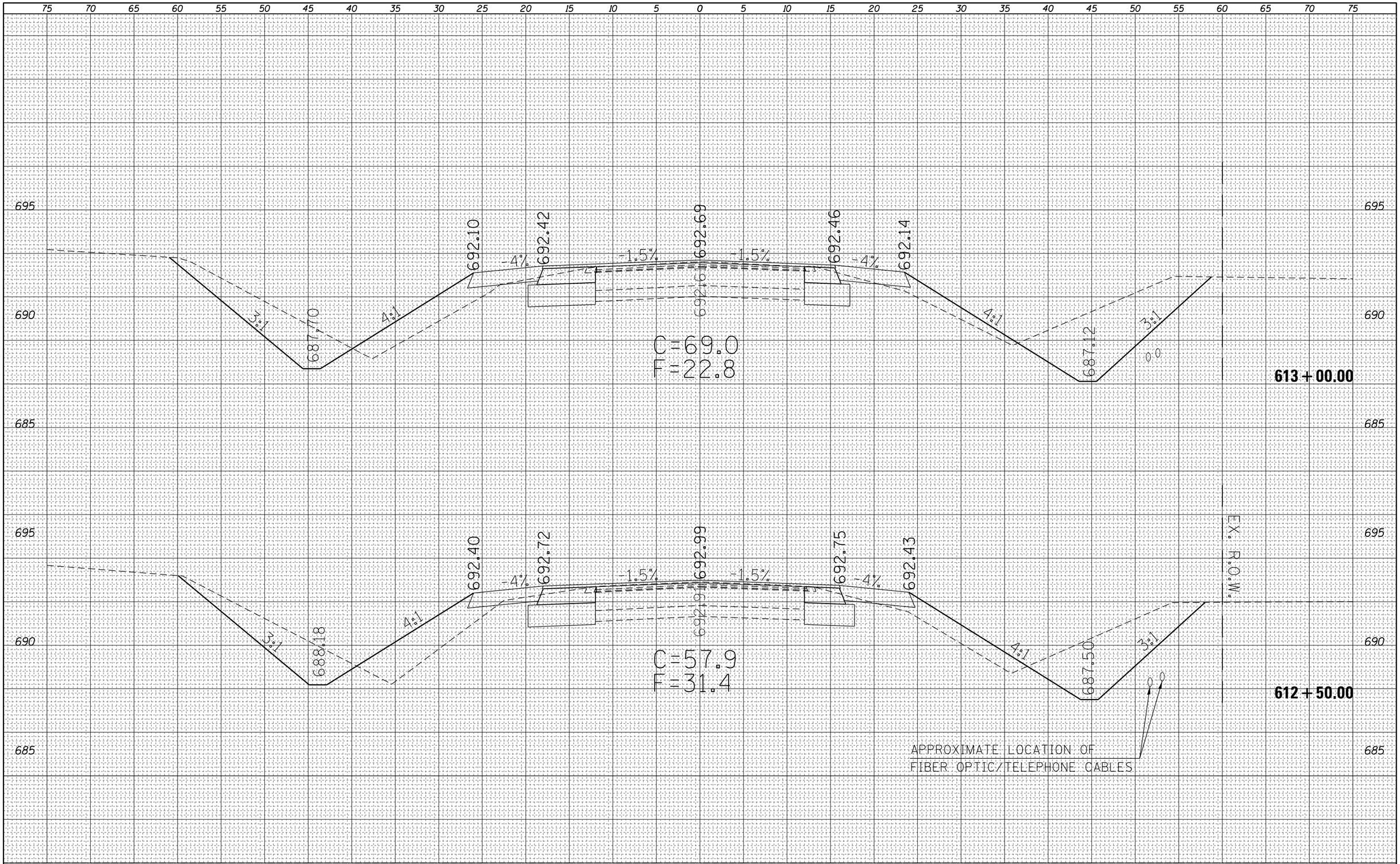

FINAL SURVEY		BY	DATE
NOTE BOOK	SURVEYED		
	PLOTTED		
	TEMPLATE		
	AREAS		
NO.	AREAS CHECKED		

ORIGINAL SURVEY		BY	DATE
NOTE BOOK	SURVEYED		
	PLOTTED		
	TEMPLATE		
	AREAS		
NO.	AREAS CHECKED		

FILE NAME = c:\pw_work\pwidot\steffenmk\d0158776\D774423	USER NAME = steffenmk	DESIGNED -	REVISED -
	sc-sht-IL16.dgn	DRAWN -	REVISED -
	PLOT SCALE = 10.0000 ' / in.	CHECKED -	REVISED -
Default	PLOT DATE = 5/7/2014	DATE -	REVISED -

STATE OF ILLINOIS
DEPARTMENT OF TRANSPORTATION

CROSS SECTIONS
IL. RTE. 16 MAINLINE

SCALE: 5 | SHEET 15 OF 19 SHEETS | STA. 612+50.00 TO STA. 613+00.00

F.A.P. RTE.	SECTION	COUNTY	TOTAL SHEETS	SHEET NO.
91	5N	Coles	271	143

CONTRACT NO. 74423

ILLINOIS FED. AID PROJECT

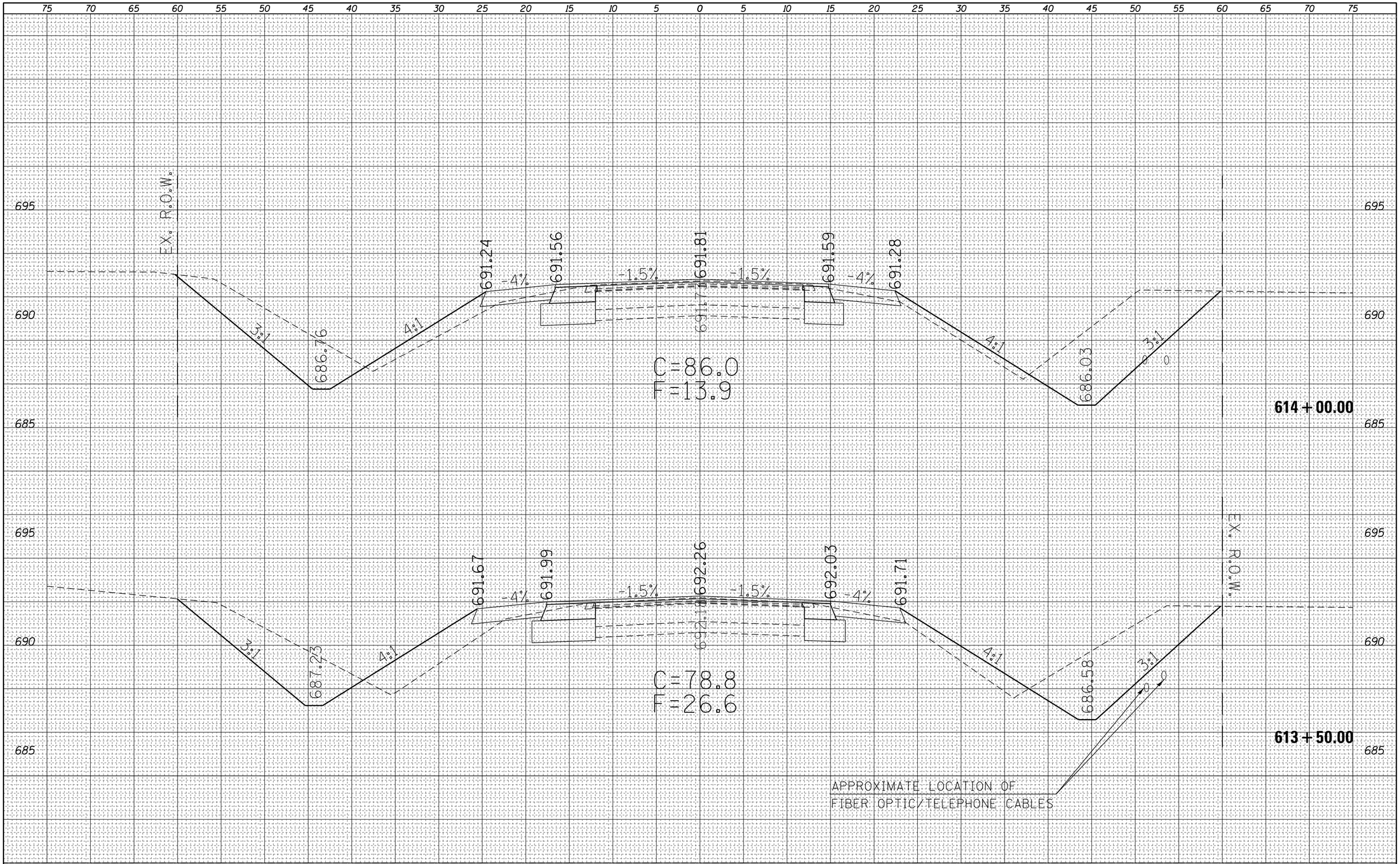

FINAL SURVEY		BY	DATE
NOTE BOOK	SURVEYED		
	PLOTTED		
	TEMPLATE		
	AREAS		
NO.	AREAS CHECKED		

ORIGINAL SURVEY		BY	DATE
NOTE BOOK	SURVEYED		
	PLOTTED		
	TEMPLATE		
	AREAS		
NO.	AREAS CHECKED		

FILE NAME =	USER NAME = steffenmk	DESIGNED -	REVISED -
c:\pw_work\pwidot\steffenmk\d0158776\D774423	sc-sht-IL16.dgn	DRAWN -	REVISED -
	PLOT SCALE = 10.0000 ' / in.	CHECKED -	REVISED -
Default	PLOT DATE = 5/7/2014	DATE -	REVISED -

STATE OF ILLINOIS
DEPARTMENT OF TRANSPORTATION

CROSS SECTIONS
IL. RTE. 16 MAINLINE

SCALE: 5 | SHEET 16 OF 19 SHEETS | STA. 613+50.00 TO STA. 614+00.00

F.A.P. RTE.	SECTION	COUNTY	TOTAL SHEETS	SHEET NO.
91	5N	Coles	271	144

CONTRACT NO. 74423

ILLINOIS FED. AID PROJECT

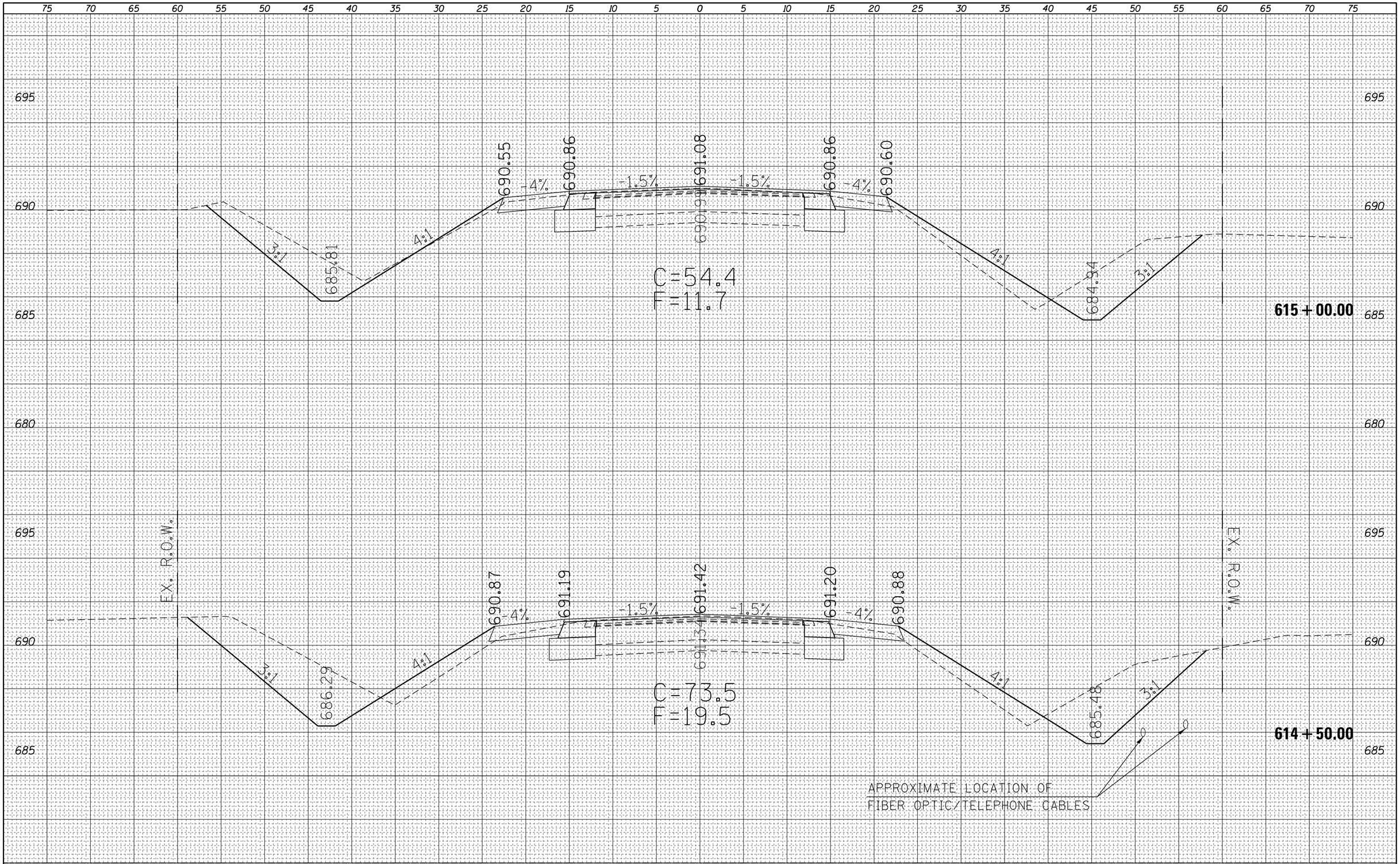

FINAL SURVEY		BY	DATE
NOTE BOOK	SURVEYED		
	PLOTTED		
	TEMPLATE		
	AREAS		
NO.	AREAS CHECKED		

ORIGINAL SURVEY		BY	DATE
NOTE BOOK	SURVEYED		
	PLOTTED		
	TEMPLATE		
	AREAS		
NO.	AREAS CHECKED		

FILE NAME = c:\pw_work\pwidot\steffenmk\d0158776\D774423	USER NAME = steffenmk	DESIGNED -	REVISED -
	sc-sht-IL16.dgn	DRAWN -	REVISED -
	PLOT SCALE = 10.0000 ' / in.	CHECKED -	REVISED -
Default	PLOT DATE = 5/7/2014	DATE -	REVISED -

STATE OF ILLINOIS
DEPARTMENT OF TRANSPORTATION

CROSS SECTIONS
IL. RTE. 16 MAINLINE

SCALE: 5 | SHEET 17 OF 19 SHEETS | STA. 614+50.00 TO STA. 615+00.00

F.A.P. RTE.	SECTION	COUNTY	TOTAL SHEETS	SHEET NO.
91	5N	Coles	271	145

CONTRACT NO. 74423

ILLINOIS FED. AID PROJECT

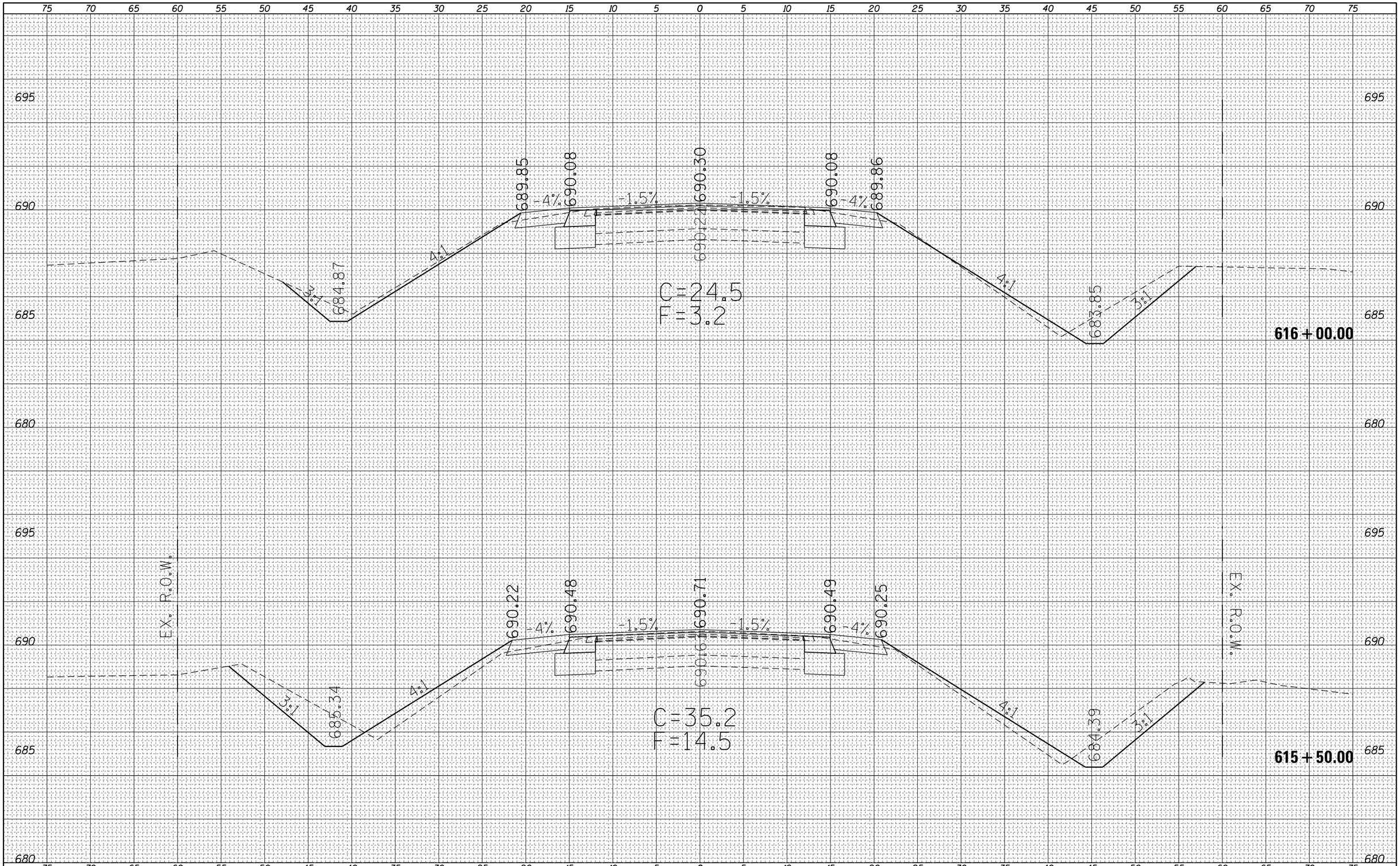

FINAL SURVEY		BY	DATE
NOTE BOOK	SURVEYED		
	PLOTTED		
	TEMPLATE		
	AREAS		
NO.	AREAS CHECKED		

ORIGINAL SURVEY		BY	DATE
NOTE BOOK	SURVEYED		
	PLOTTED		
	TEMPLATE		
	AREAS		
NO.	AREAS CHECKED		

FILE NAME = c:\pw_work\pwidot\steffenmk\d0158776\D774423	USER NAME = steffenmk	DESIGNED -	REVISED -
	sc-sht-IL16.dgn	DRAWN -	REVISED -
	PLOT SCALE = 10.0000 ' / in.	CHECKED -	REVISED -
Default	PLOT DATE = 5/7/2014	DATE -	REVISED -

STATE OF ILLINOIS
DEPARTMENT OF TRANSPORTATION

CROSS SECTIONS
IL. RTE. 16 MAINLINE

SCALE: 5 | SHEET 18 OF 19 SHEETS | STA. 615+50.00 TO STA. 616+00.00

F.A.P. RTE.	SECTION	COUNTY	TOTAL SHEETS	SHEET NO.
91	5N	Coles	271	146

CONTRACT NO. 74423

ILLINOIS FED. AID PROJECT

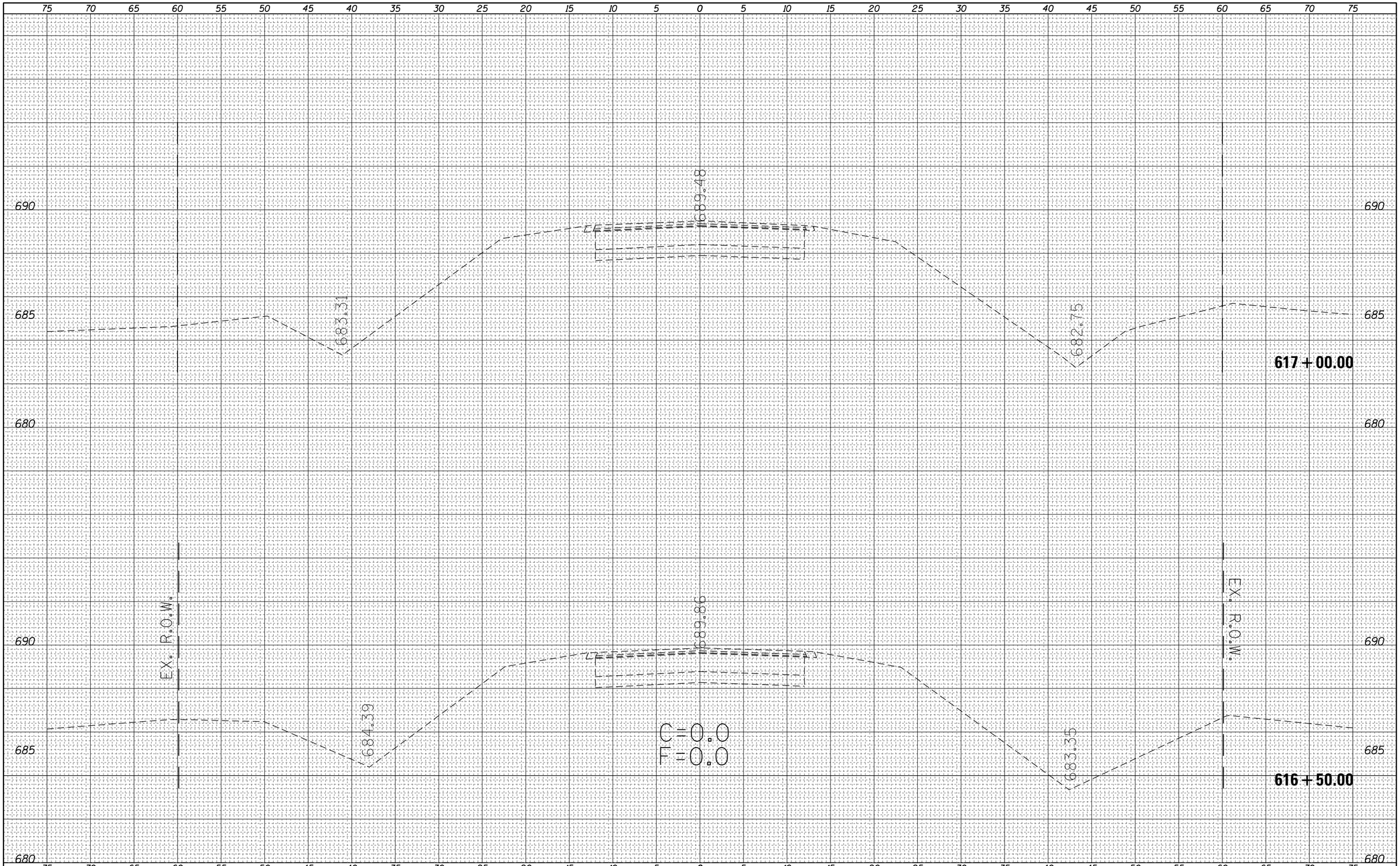

FINAL SURVEY		BY	DATE
NOTE BOOK	SURVEYED		
	PLOTTED		
	TEMPLATE		
	AREAS		
NO.	AREAS CHECKED		

ORIGINAL SURVEY		BY	DATE
NOTE BOOK	SURVEYED		
	PLOTTED		
	TEMPLATE		
	AREAS		
NO.	AREAS CHECKED		

FILE NAME =	USER NAME = steffenmk	DESIGNED -	REVISED -
c:\pw_work\pwidot\steffenmk\d0158776\D774423	sc-sht-IL16.dgn	DRAWN -	REVISED -
	PLOT SCALE = 10.0000 ' / in.	CHECKED -	REVISED -
Default	PLOT DATE = 5/7/2014	DATE -	REVISED -

STATE OF ILLINOIS
DEPARTMENT OF TRANSPORTATION

CROSS SECTIONS
IL. RTE. 16 MAINLINE

SCALE: 5 | SHEET 19 OF 19 SHEETS | STA. 616+50.00 TO STA. 617+00.00

F.A.P. RTE.	SECTION	COUNTY	TOTAL SHEETS	SHEET NO.
91	5N	Coles	271	147

CONTRACT NO. 74423

ILLINOIS FED. AID PROJECT

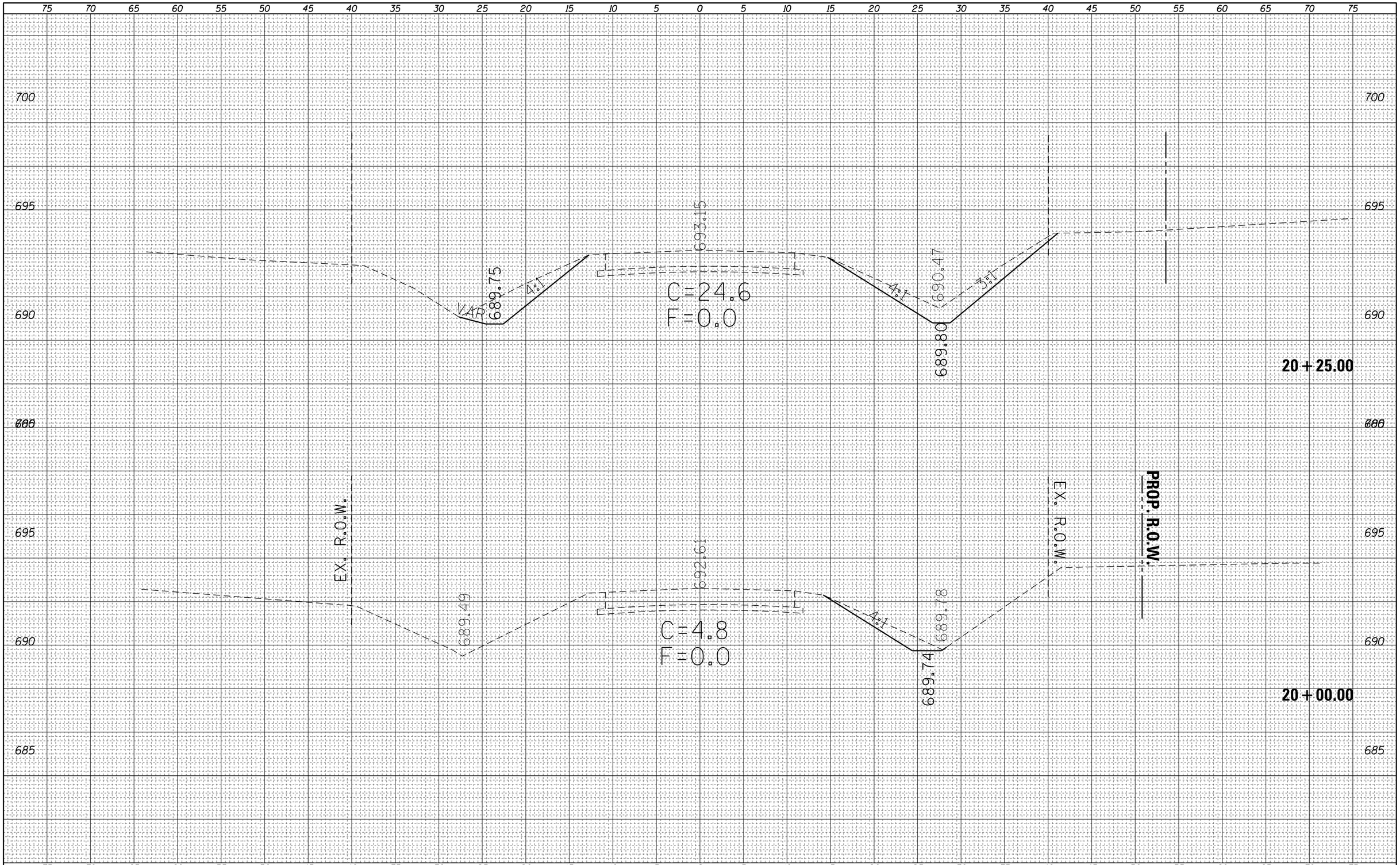

FINAL SURVEY		BY	DATE
NOTE BOOK	SURVEYED		
	PLOTTED		
	TEMPLATE		
	AREAS		
	AREAS CHECKED		
NO.			

ORIGINAL SURVEY		BY	DATE
NOTE BOOK	SURVEYED		
	PLOTTED		
	TEMPLATE		
	AREAS		
	AREAS CHECKED		
NO.			

FILE NAME =	USER NAME = steffenmk	DESIGNED -	REVISED -
c:\pw_work\pwidot\steffenmk\d0158776\D774423-sc-sht-PRHarrisonA.dgn		DRAWN -	REVISED -
	PLOT SCALE = 10.0000 ' / in.	CHECKED -	REVISED -
Default	PLOT DATE = 5/7/2014	DATE -	REVISED -

STATE OF ILLINOIS
DEPARTMENT OF TRANSPORTATION

CROSS SECTIONS
E. HARRISON A

SCALE: 5 | SHEET 1 OF 20 SHEETS | STA. 20+00.00 TO STA. 20+25.00

F.A.P. RTE.	SECTION	COUNTY	TOTAL SHEETS	SHEET NO.
91	5N	Coles	271	148

CONTRACT NO. 74423

ILLINOIS FED. AID PROJECT

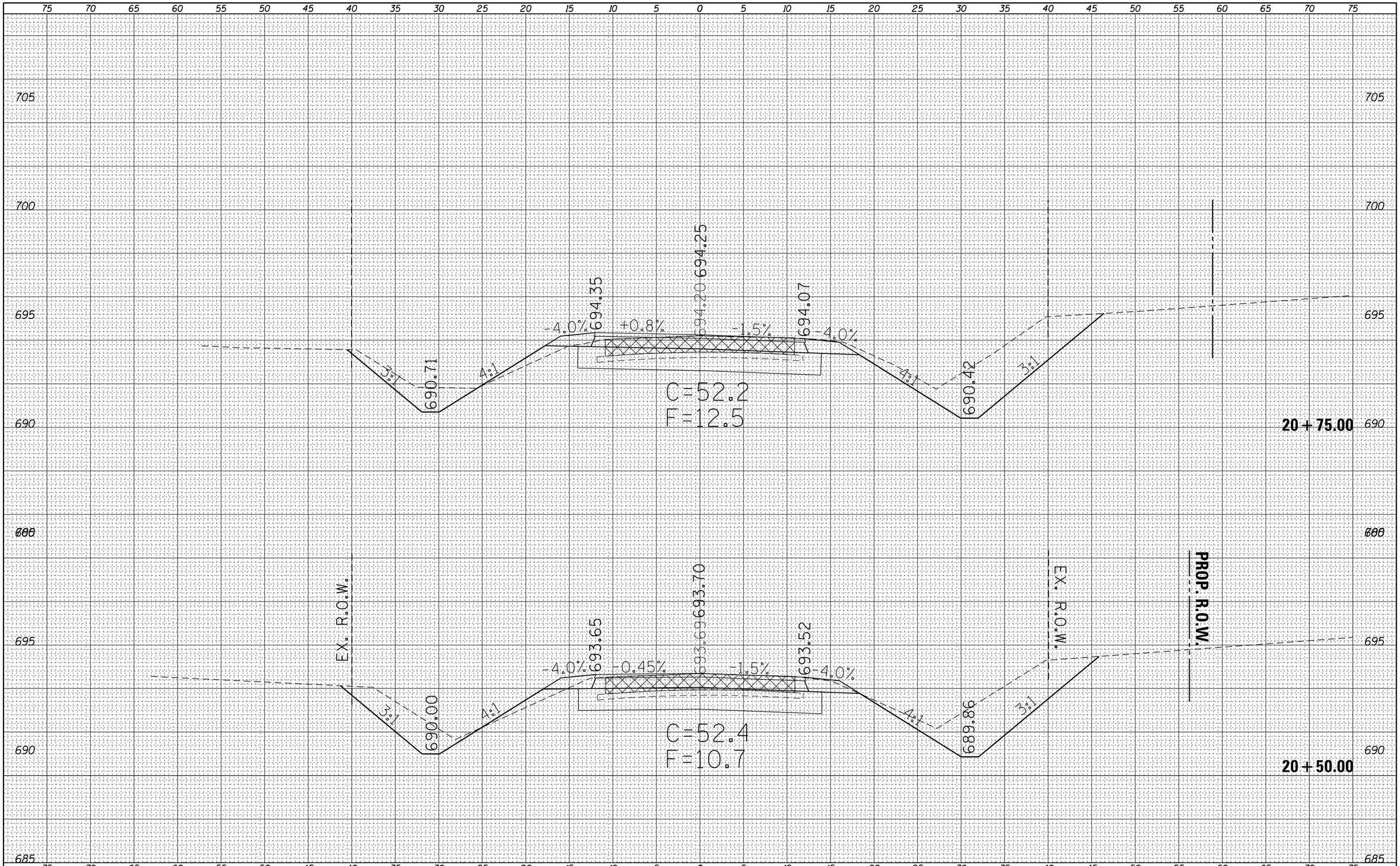

FINAL SURVEY		BY	DATE
NOTE BOOK	SURVEYED		
	PLOTTED		
	TEMPLATE		
	AREAS		
NO.	AREAS CHECKED		

ORIGINAL SURVEY		BY	DATE
NOTE BOOK	SURVEYED		
	PLOTTED		
	TEMPLATE		
	AREAS		
NO.	AREAS CHECKED		

FILE NAME = c:\pw_work\pwidot\steffenmk\d0158776\D774423-sc-sht-PRHarrisonA.dgn	USER NAME = steffenmk	DESIGNED -	REVISED -
		DRAWN -	REVISED -
	PLOT SCALE = 10.0000 ' / in.	CHECKED -	REVISED -
Default	PLOT DATE = 5/7/2014	DATE -	REVISED -

STATE OF ILLINOIS
DEPARTMENT OF TRANSPORTATION

CROSS SECTIONS
E. HARRISON A

SCALE: 5 | SHEET 2 OF 20 SHEETS | STA. 20+50.00 TO STA. 20+75.00

F.A.P. RTE.	SECTION	COUNTY	TOTAL SHEETS	SHEET NO.
91	5N	Coles	271	149

CONTRACT NO. 74423

ILLINOIS FED. AID PROJECT

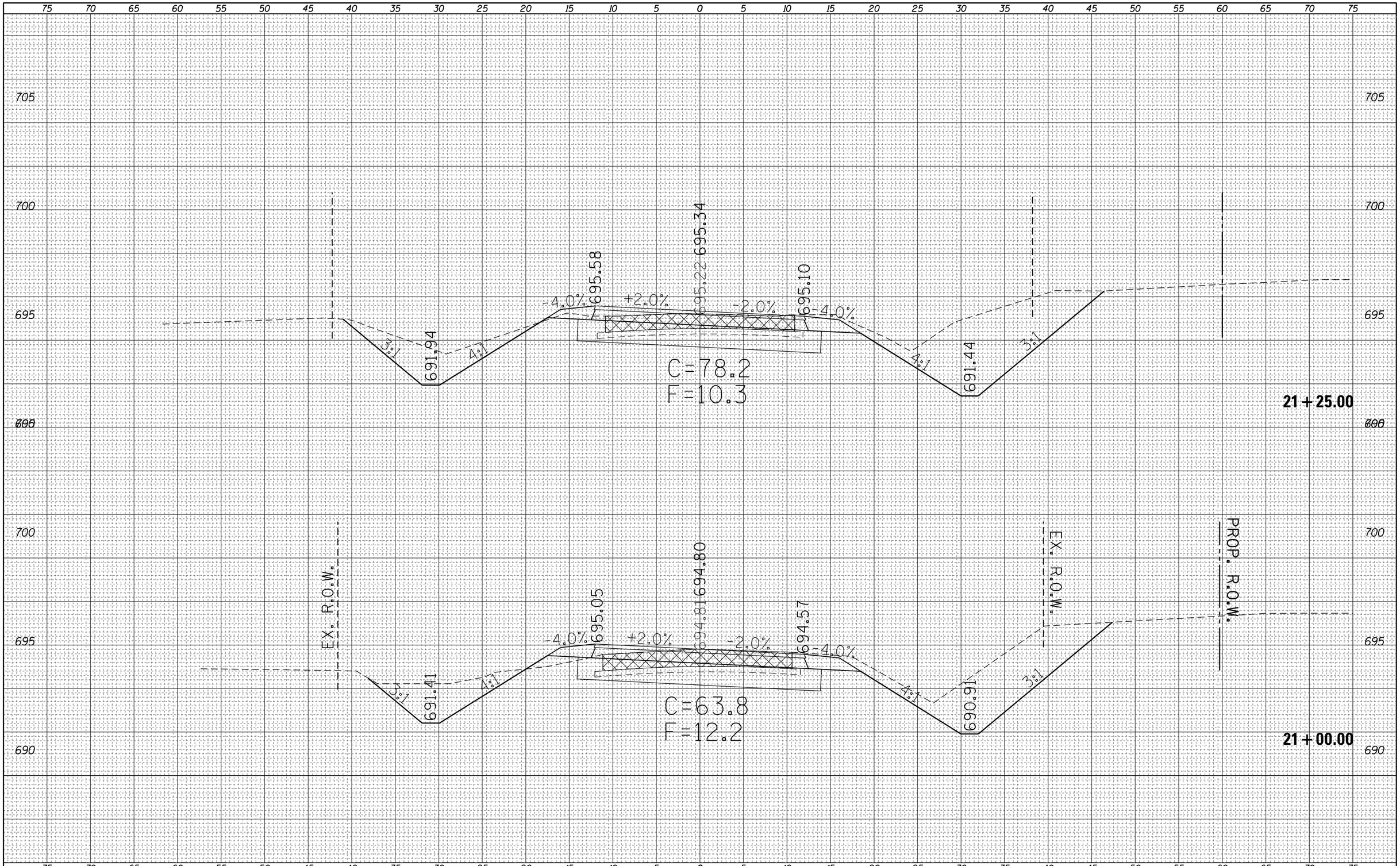

FINAL SURVEY		BY	DATE
NOTE BOOK	SURVEYED		
	PLOTTED		
	TEMPLATE		
	AREAS		
NO.	AREAS CHECKED		

ORIGINAL SURVEY		BY	DATE
NOTE BOOK	SURVEYED		
	PLOTTED		
	TEMPLATE		
	AREAS		
NO.	AREAS CHECKED		

FILE NAME = c:\pw_work\pwidot\steffenmk\d0158776\D774423-sc-sht-PRHarrisonA.dgn	USER NAME = steffenmk	DESIGNED -	REVISED -
		DRAWN -	REVISED -
	PLOT SCALE = 10.0000 ' / in.	CHECKED -	REVISED -
Default	PLOT DATE = 5/7/2014	DATE -	REVISED -

STATE OF ILLINOIS
DEPARTMENT OF TRANSPORTATION

CROSS SECTIONS
E. HARRISON A

SCALE: 5 | SHEET 3 OF 20 SHEETS | STA. 21+00.00 TO STA. 21+25.00

F.A.P. RTE.	SECTION	COUNTY	TOTAL SHEETS	SHEET NO.
91	5N	Coles	271	150

CONTRACT NO. 74423

ILLINOIS FED. AID PROJECT

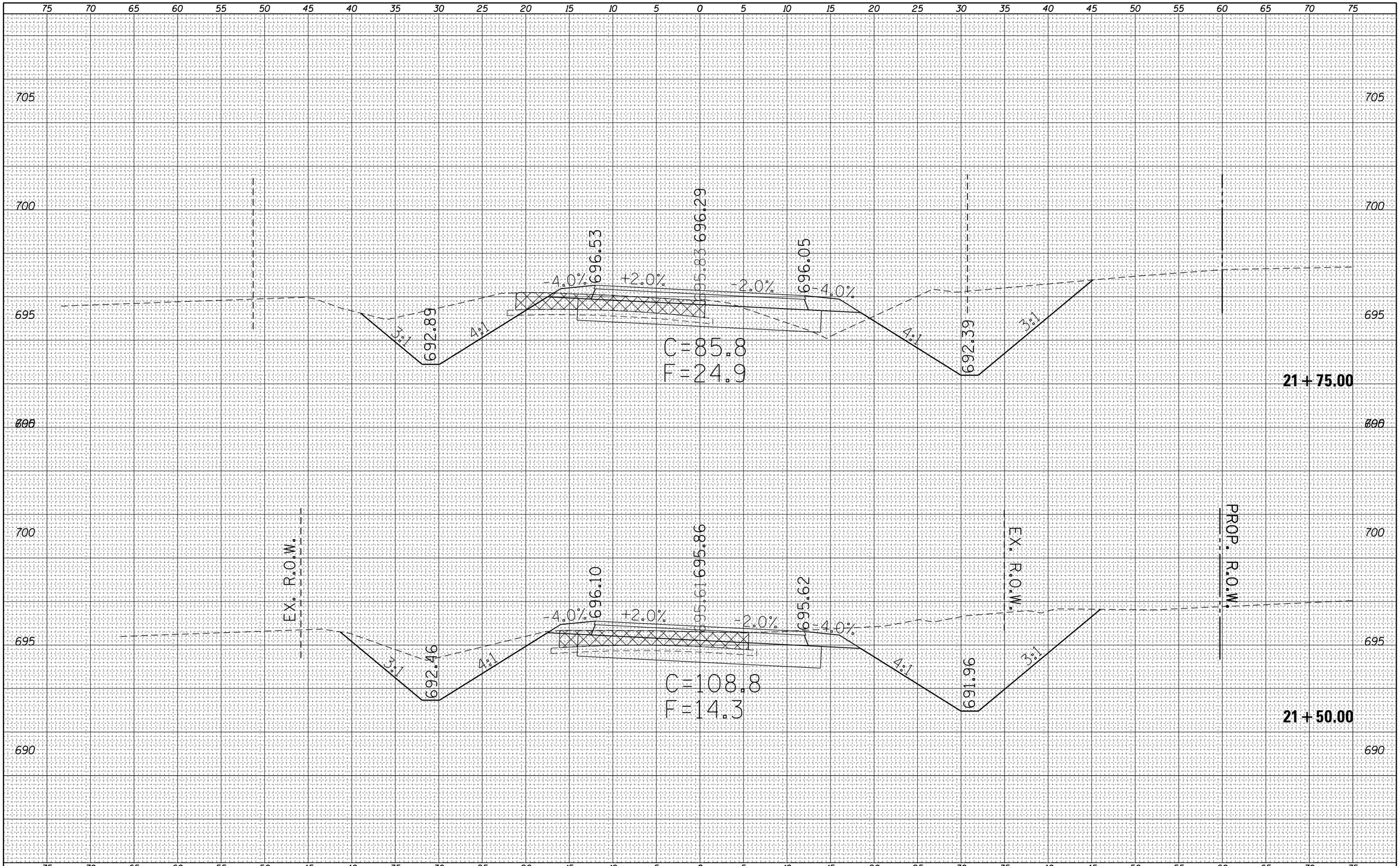

FINAL SURVEY		BY	DATE
NOTE BOOK	SURVEYED		
	PLOTTED		
	TEMPLATE		
	AREAS		
NO.	AREAS CHECKED		

ORIGINAL SURVEY		BY	DATE
NOTE BOOK	SURVEYED		
	PLOTTED		
	TEMPLATE		
	AREAS		
NO.	AREAS CHECKED		

FILE NAME =	USER NAME = steffenmk	DESIGNED -	REVISED -
c:\pw_work\pwidot\steffenmk\d0158776\D774423-sc-sht-PRHarrisonA.dgn		DRAWN -	REVISED -
	PLOT SCALE = 10.0000 ' / in.	CHECKED -	REVISED -
Default	PLOT DATE = 5/7/2014	DATE -	REVISED -

STATE OF ILLINOIS
DEPARTMENT OF TRANSPORTATION

CROSS SECTIONS
E. HARRISON A

SCALE: 5 | SHEET 4 OF 20 SHEETS | STA. 21+50.00 TO STA. 21+75.00

F.A.P. RTE.	SECTION	COUNTY	TOTAL SHEETS	SHEET NO.
91	5N	Coles	271	151

CONTRACT NO. 74423

ILLINOIS FED. AID PROJECT

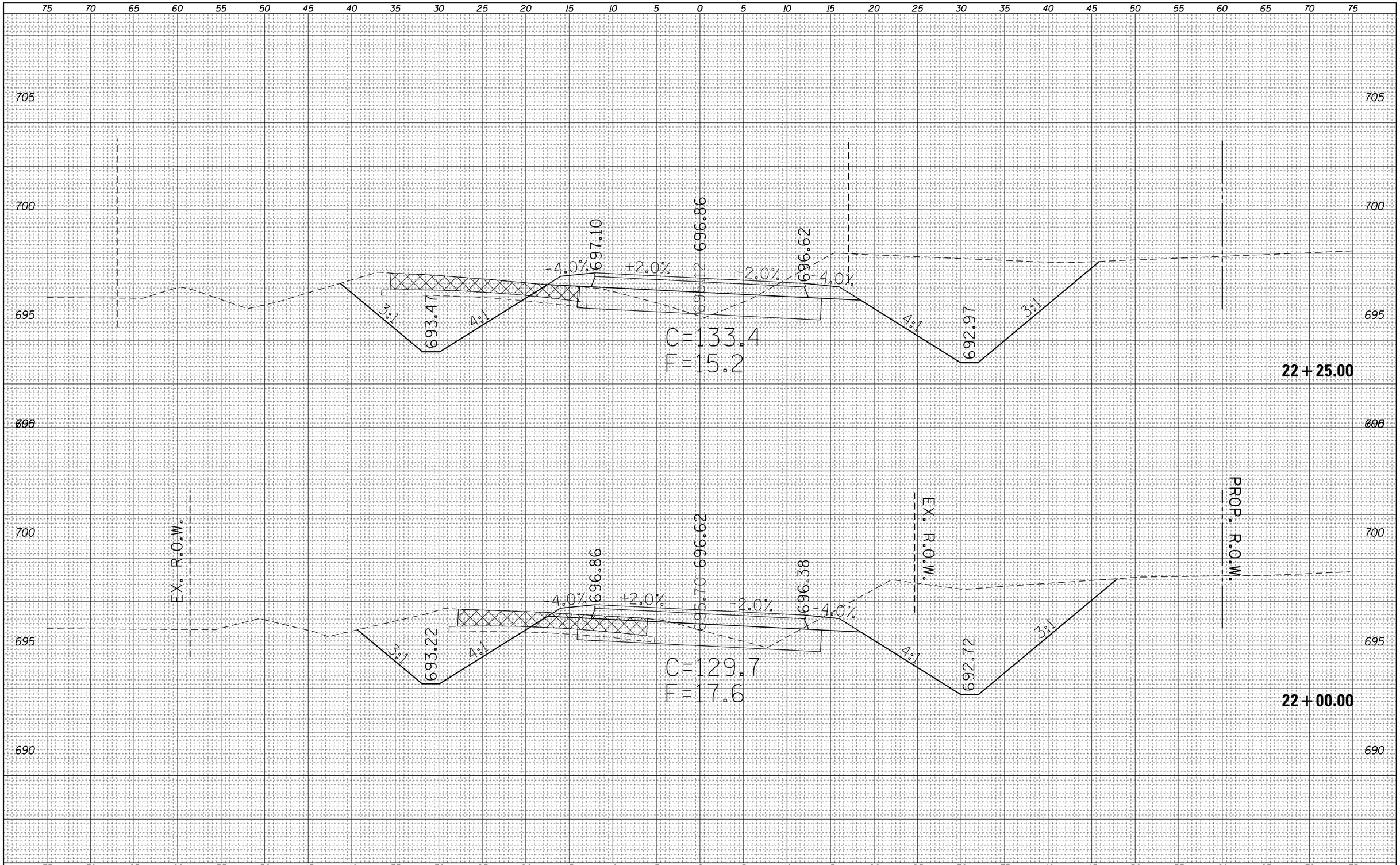

FINAL SURVEY		BY	DATE
NOTE BOOK	SURVEYED		
	PLOTTED		
	TEMPLATE		
	AREAS		
NO.	AREAS CHECKED		

ORIGINAL SURVEY		BY	DATE
NOTE BOOK	SURVEYED		
	PLOTTED		
	TEMPLATE		
	AREAS		
NO.	AREAS CHECKED		

FILE NAME = c:\pw_work\pwidot\steffenmk\d0158776\D774423-sc-sht-PRHarrisonA.dgn	USER NAME = steffenmk	DESIGNED -	REVISED -
		DRAWN -	REVISED -
	PLOT SCALE = 10.0000 ' / in.	CHECKED -	REVISED -
Default	PLOT DATE = 5/7/2014	DATE -	REVISED -

STATE OF ILLINOIS
DEPARTMENT OF TRANSPORTATION

CROSS SECTIONS
E. HARRISON A

SCALE: 5 | SHEET 5 OF 20 SHEETS | STA. 22+00.00 TO STA. 22+25.00

F.A.P. RTE.	SECTION	COUNTY	TOTAL SHEETS	SHEET NO.
91	5N	Coles	271	152

CONTRACT NO. 74423

ILLINOIS FED. AID PROJECT

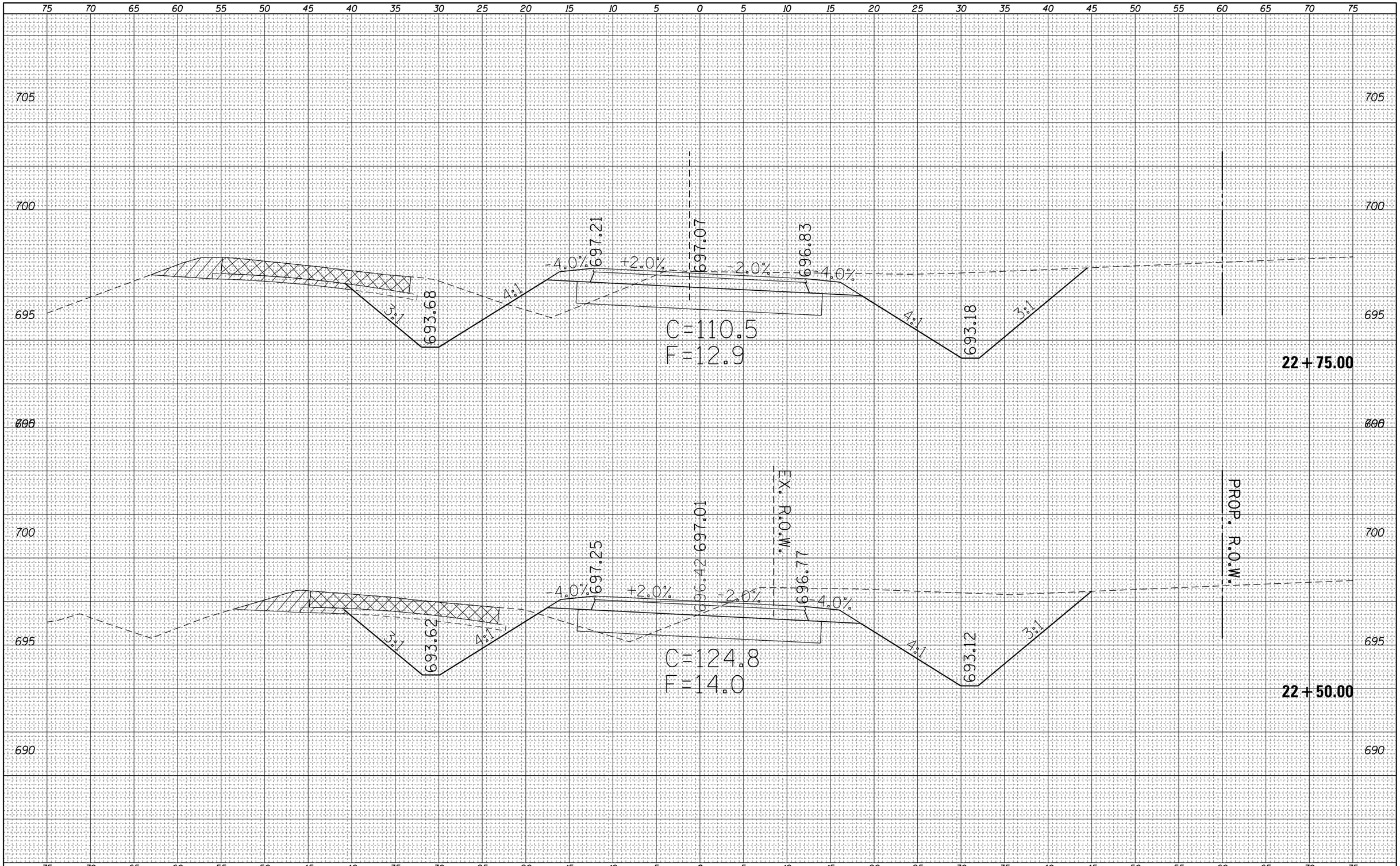

FINAL SURVEY		BY	DATE
NOTE BOOK	SURVEYED		
	PLOTTED		
	TEMPLATE		
	AREAS		
NO.	AREAS CHECKED		

ORIGINAL SURVEY		BY	DATE
NOTE BOOK	SURVEYED		
	PLOTTED		
	TEMPLATE		
	AREAS		
NO.	AREAS CHECKED		

FILE NAME =	USER NAME = steffenmk	DESIGNED -	REVISED -
c:\pw_work\pwidot\steffenmk\d0158776\D774423-sc-sht-PRHarrisonA.dgn		DRAWN -	REVISED -
	PLOT SCALE = 10.0000 ' / in.	CHECKED -	REVISED -
Default	PLOT DATE = 5/7/2014	DATE -	REVISED -

STATE OF ILLINOIS
DEPARTMENT OF TRANSPORTATION

CROSS SECTIONS
E. HARRISON A

SCALE: 5 | SHEET 6 OF 20 SHEETS | STA. 22+50.00 TO STA. 22+75.00

F.A.P. RTE.	SECTION	COUNTY	TOTAL SHEETS	SHEET NO.
91	5N	Coles	271	153

CONTRACT NO. 74423

ILLINOIS FED. AID PROJECT

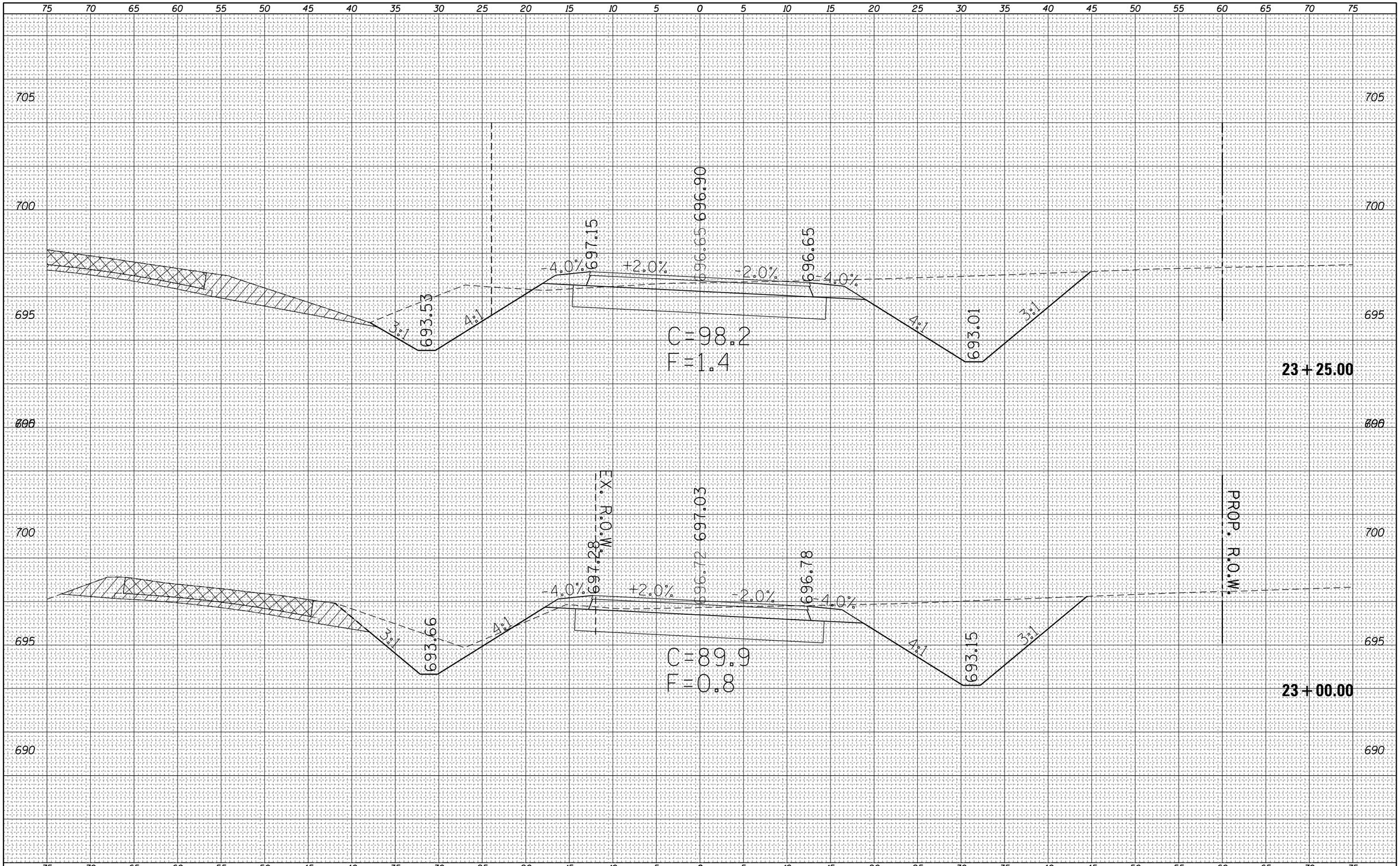

FINAL SURVEY		BY	DATE
NOTE BOOK	SURVEYED		
	PLOTTED		
	TEMPLATE		
	AREAS		
NO.	AREAS CHECKED		

ORIGINAL SURVEY		BY	DATE
NOTE BOOK	SURVEYED		
	PLOTTED		
	TEMPLATE		
	AREAS		
NO.	AREAS CHECKED		

FILE NAME =	USER NAME = steffenmk	DESIGNED -	REVISED -
c:\pw_work\pwidot\steffenmk\d0158776\D774423-sc-sht-PRHarrisonA.dgn		DRAWN -	REVISED -
	PLOT SCALE = 10.0000 ' / in.	CHECKED -	REVISED -
Default	PLOT DATE = 5/7/2014	DATE -	REVISED -

STATE OF ILLINOIS
DEPARTMENT OF TRANSPORTATION

CROSS SECTIONS
E. HARRISON A

SCALE: 5 | SHEET 7 OF 20 SHEETS | STA. 23+00.00 TO STA. 23+25.00

F.A.P. RTE.	SECTION	COUNTY	TOTAL SHEETS	SHEET NO.
91	5N	Coles	271	154

CONTRACT NO. 74423

ILLINOIS FED. AID PROJECT

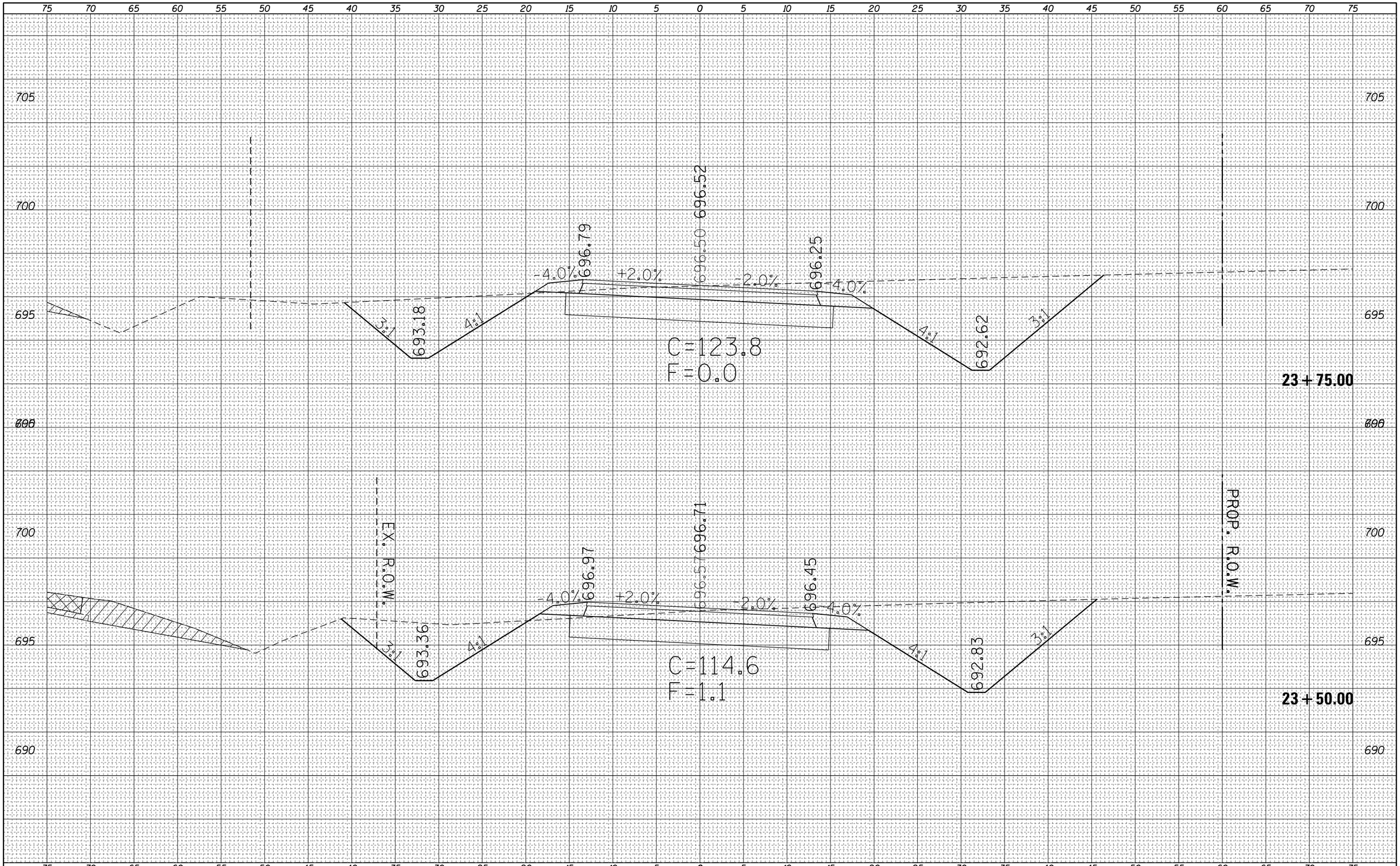

FINAL SURVEY		BY	DATE
NOTE BOOK	SURVEYED		
	PLOTTED		
	TEMPLATE		
	AREAS		
NO.	AREAS CHECKED		

ORIGINAL SURVEY		BY	DATE
NOTE BOOK	SURVEYED		
	PLOTTED		
	TEMPLATE		
	AREAS		
NO.	AREAS CHECKED		

FILE NAME = c:\pw_work\pwidot\steffenmk\d0158776\D774423-sheet	USER NAME = steffenmk	DESIGNED -	REVISED -
		DRAWN -	REVISED -
	PLOT SCALE = 10.0000 ' / in.	CHECKED -	REVISED -
Default	PLOT DATE = 5/7/2014	DATE -	REVISED -

STATE OF ILLINOIS
DEPARTMENT OF TRANSPORTATION

CROSS SECTIONS
E. HARRISON A

SCALE: 5 | SHEET 8 OF 20 SHEETS | STA. 23+50.00 TO STA. 23+75.00

F.A.P. RTE.	SECTION	COUNTY	TOTAL SHEETS	SHEET NO.
91	5N	Coles	271	155

CONTRACT NO. 74423

ILLINOIS FED. AID PROJECT

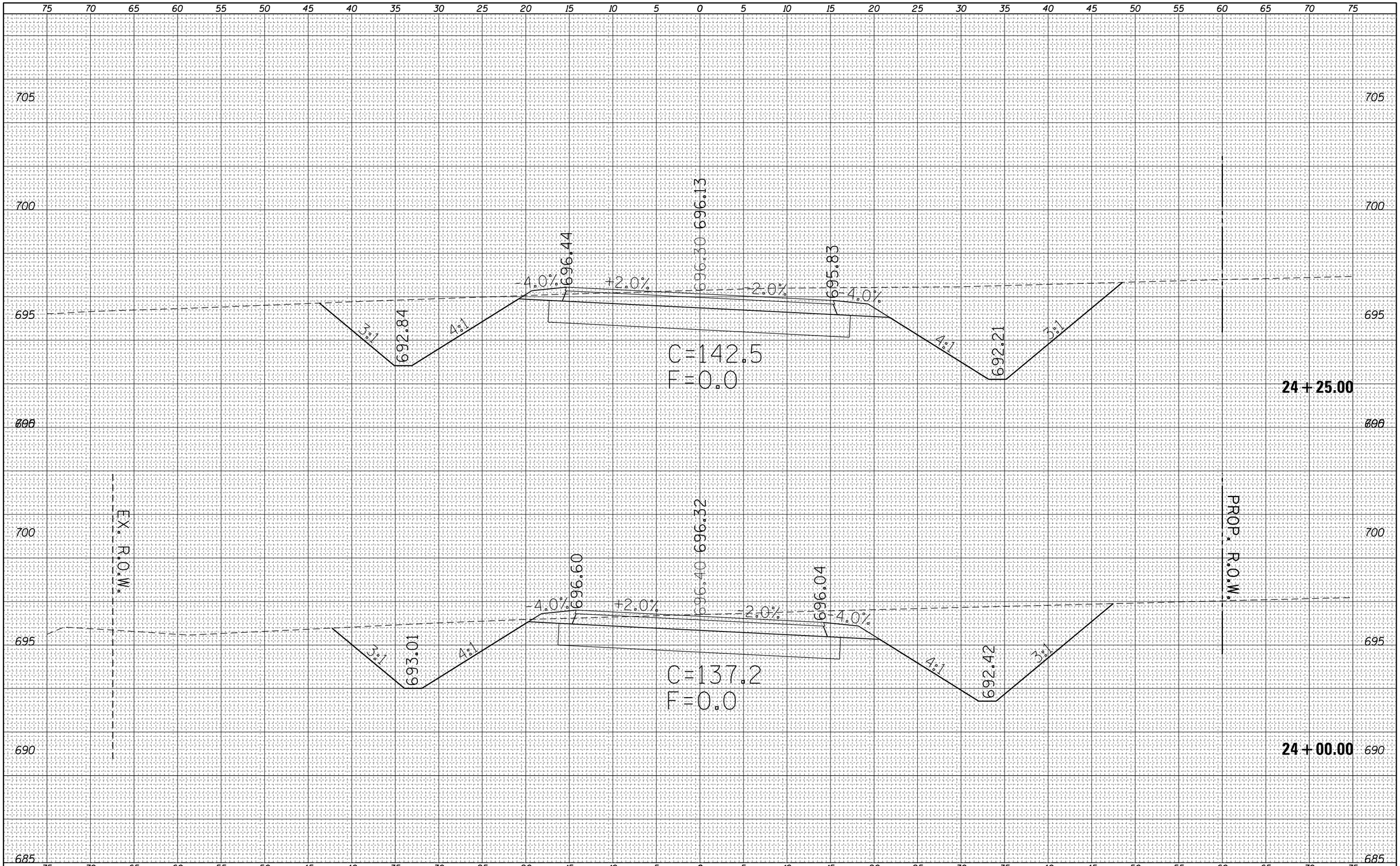

FINAL SURVEY		BY	DATE
NOTE BOOK	SURVEYED		
	PLOTTED		
	TEMPLATE		
	AREAS		
NO.	AREAS CHECKED		

ORIGINAL SURVEY		BY	DATE
NOTE BOOK	SURVEYED		
	PLOTTED		
	TEMPLATE		
	AREAS		
NO.	AREAS CHECKED		

FILE NAME = c:\pw_work\pwidot\steffenmk\d0158776\D774423-sc-sht-PRHarrisonA.dgn	USER NAME = steffenmk	DESIGNED -	REVISED -
		DRAWN -	REVISED -
	PLOT SCALE = 10.0000 ' / in.	CHECKED -	REVISED -
Default	PLOT DATE = 5/7/2014	DATE -	REVISED -

STATE OF ILLINOIS
DEPARTMENT OF TRANSPORTATION

CROSS SECTIONS
E. HARRISON A

SCALE: 5 | SHEET 9 OF 20 SHEETS | STA. 24+00.00 TO STA. 24+25.00

F.A.P. RTE.	SECTION	COUNTY	TOTAL SHEETS	SHEET NO.
91	5N	Coles	271	156

CONTRACT NO. 74423

ILLINOIS FED. AID PROJECT

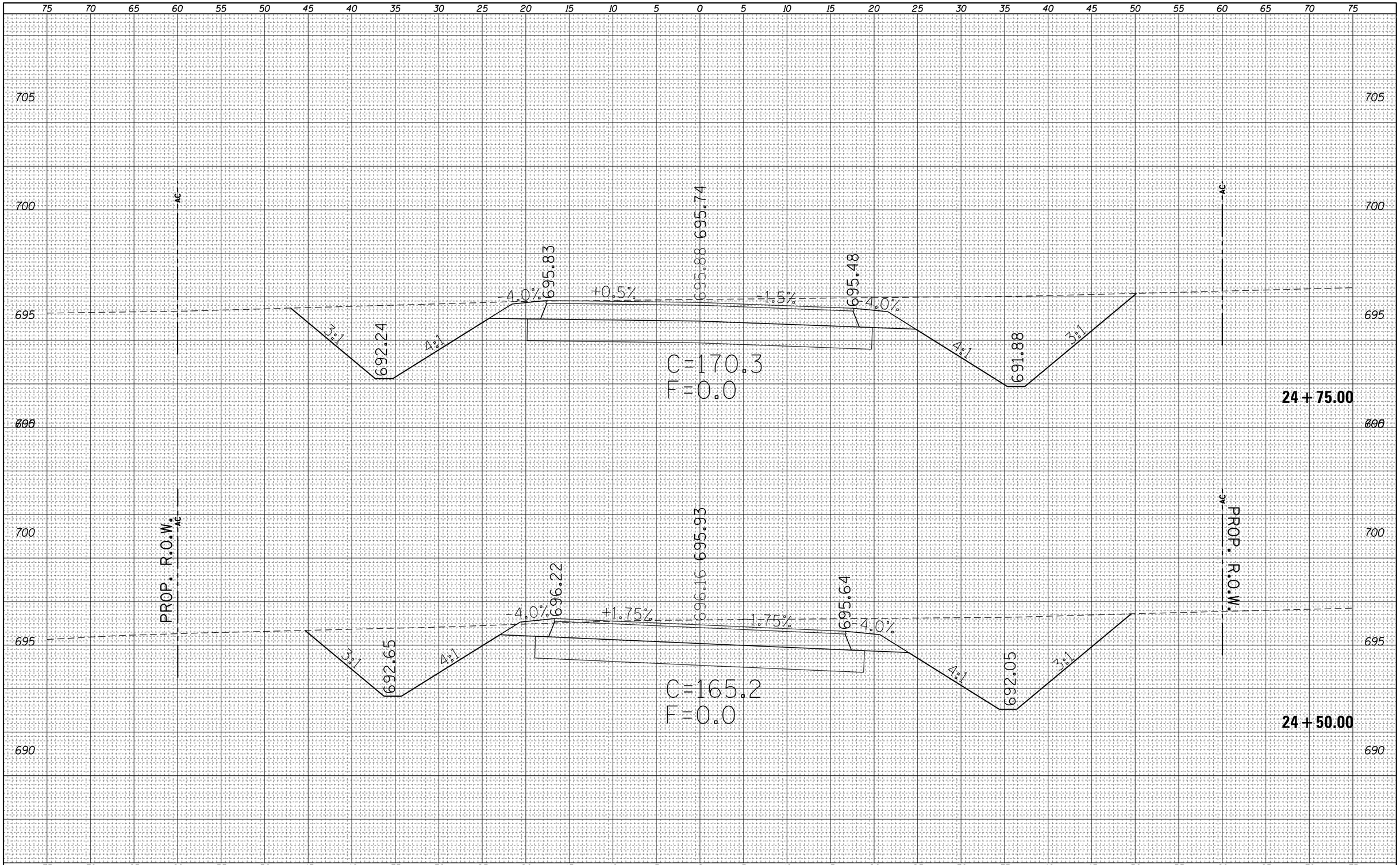

FINAL SURVEY		BY	DATE
NOTE BOOK	SURVEYED		
	PLOTTED		
	TEMPLATE		
	AREAS		
NO.	AREAS CHECKED		

ORIGINAL SURVEY		BY	DATE
NOTE BOOK	SURVEYED		
	PLOTTED		
	TEMPLATE		
	AREAS		
NO.	AREAS CHECKED		

FILE NAME =	USER NAME = steffenmk	DESIGNED -	REVISED -
c:\pw_work\pwidot\steffenmk\d0158776\D774423-sc-sht-PRHarrisonA.dgn		DRAWN -	REVISED -
	PLOT SCALE = 10.0000 ' / in.	CHECKED -	REVISED -
Default	PLOT DATE = 5/7/2014	DATE -	REVISED -

STATE OF ILLINOIS
DEPARTMENT OF TRANSPORTATION

CROSS SECTIONS
E. HARRISON A

SCALE: 5 | SHEET 10 OF 20 SHEETS | STA. 24+50.00 TO STA. 24+75.00

F.A.P. RTE.	SECTION	COUNTY	TOTAL SHEETS	SHEET NO.
91	5N	Coles	271	157

CONTRACT NO. 74423

ILLINOIS FED. AID PROJECT

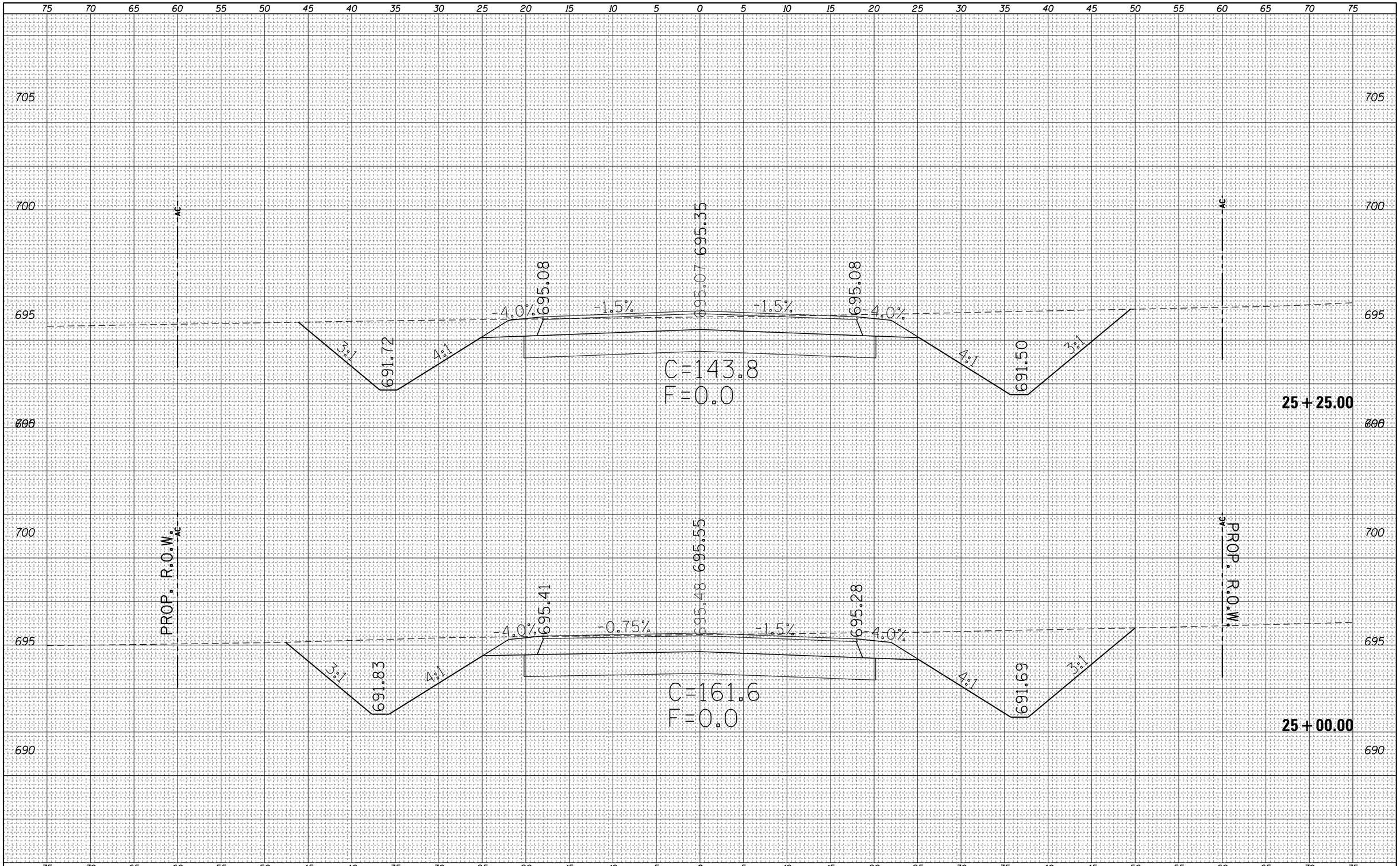

FINAL SURVEY		BY	DATE
NOTE BOOK	SURVEYED		
	PLOTTED		
	TEMPLATE		
	AREAS		
NO.	AREAS CHECKED		

ORIGINAL SURVEY		BY	DATE
NOTE BOOK	SURVEYED		
	PLOTTED		
	TEMPLATE		
	AREAS		
NO.	AREAS CHECKED		

FILE NAME =	USER NAME = steffenmk	DESIGNED -	REVISED -
c:\pw_work\pwidot\steffenmk\d0158776\D774423-sc-sht-PRHarrisonA.dgn		DRAWN -	REVISED -
	PLOT SCALE = 10.0000 ' / in.	CHECKED -	REVISED -
Default	PLOT DATE = 5/7/2014	DATE -	REVISED -

STATE OF ILLINOIS
DEPARTMENT OF TRANSPORTATION

CROSS SECTIONS
E. HARRISON A

SCALE: 5 | SHEET 11 OF 20 SHEETS | STA. 25+00.00 TO STA. 25+25.00

F.A.P. RTE.	SECTION	COUNTY	TOTAL SHEETS	SHEET NO.
91	5N	Coles	271	158

CONTRACT NO. 74423

ILLINOIS FED. AID PROJECT

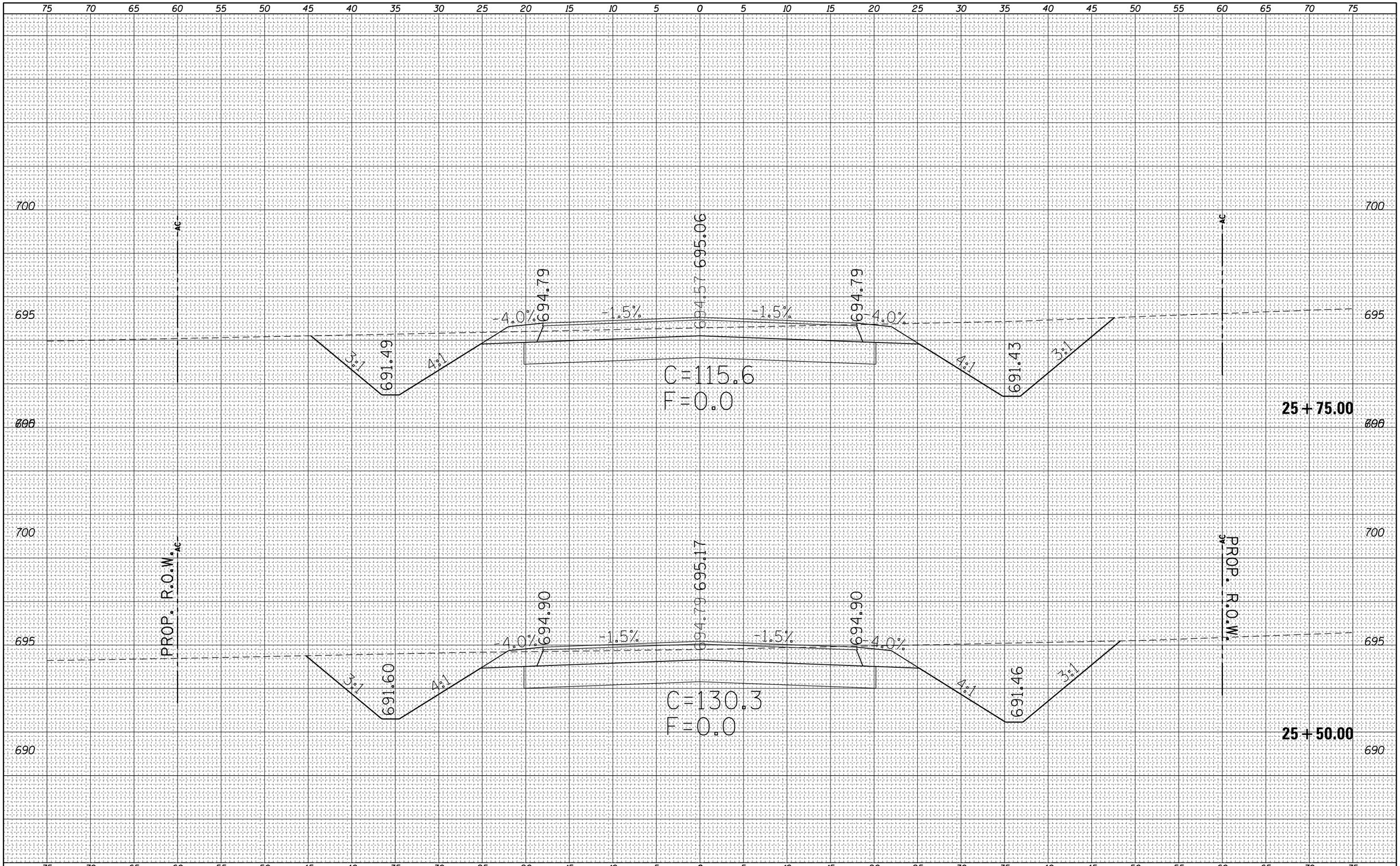

FINAL SURVEY		BY	DATE
NOTE BOOK	SURVEYED		
	PLOTTED		
	TEMPLATE		
	AREAS		
NO.	AREAS CHECKED		

ORIGINAL SURVEY		BY	DATE
NOTE BOOK	SURVEYED		
	PLOTTED		
	TEMPLATE		
	AREAS		
NO.	AREAS CHECKED		

FILE NAME =	USER NAME = steffenmk	DESIGNED -	REVISED -
c:\pw_work\pwidot\steffenmk\d0158776\D774423-sc-sht-PRHarrisonA.dgn		DRAWN -	REVISED -
	PLOT SCALE = 10.0000 ' / in.	CHECKED -	REVISED -
Default	PLOT DATE = 5/7/2014	DATE -	REVISED -

STATE OF ILLINOIS
DEPARTMENT OF TRANSPORTATION

CROSS SECTIONS
E. HARRISON A

SCALE: 5 | SHEET 12 OF 20 SHEETS | STA. 25+50.00 TO STA. 25+75.00

F.A.P. RTE.	SECTION	COUNTY	TOTAL SHEETS	SHEET NO.
91	5N	Coles	271	159

CONTRACT NO. 74423

ILLINOIS FED. AID PROJECT

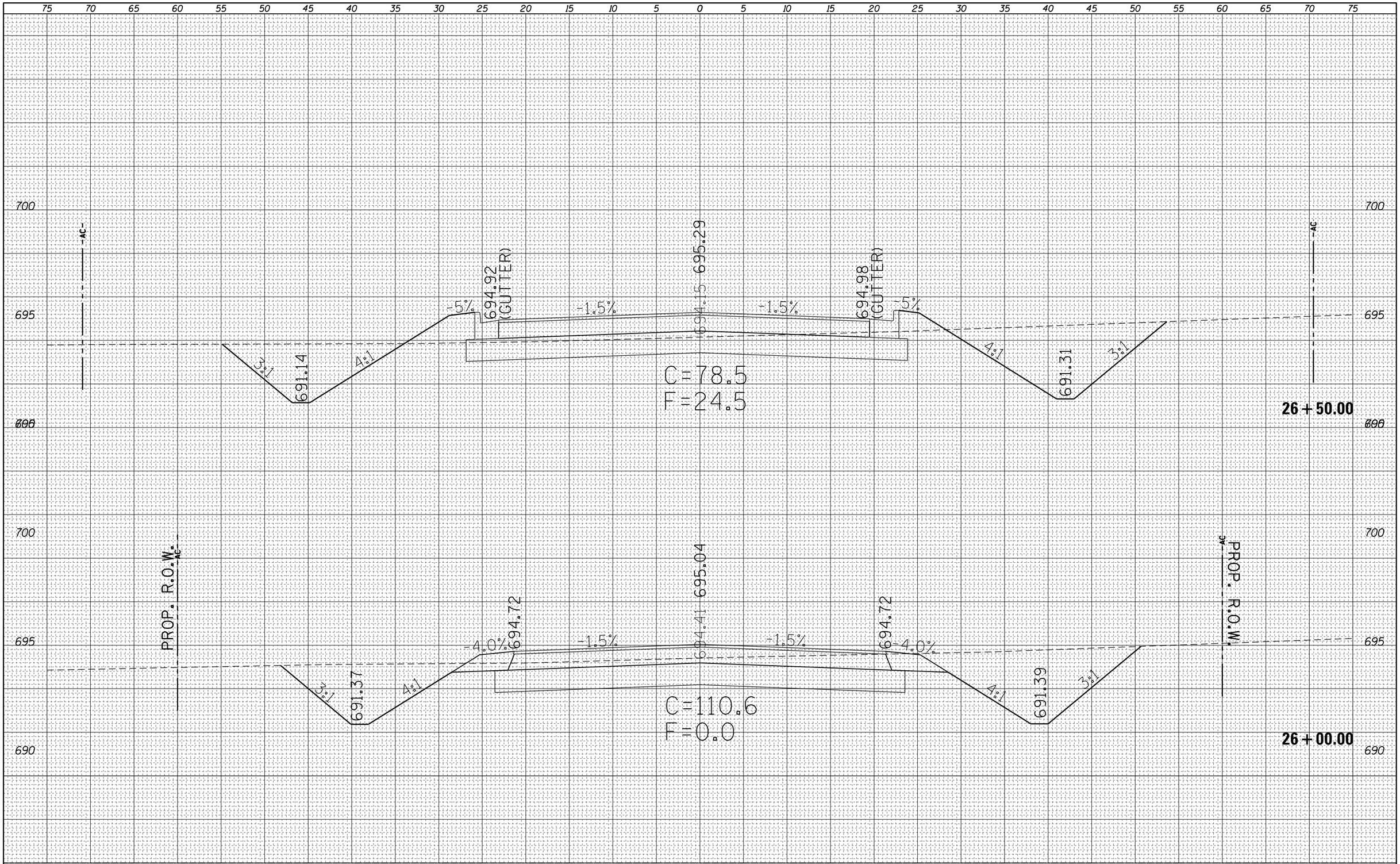

FINAL SURVEY		BY	DATE
NOTE BOOK	SURVEYED		
	PLOTTED		
	TEMPLATE		
	AREAS		
NO.	AREAS CHECKED		

ORIGINAL SURVEY		BY	DATE
NOTE BOOK	SURVEYED		
	PLOTTED		
	TEMPLATE		
	AREAS		
NO.	AREAS CHECKED		

FILE NAME =	USER NAME = steffenmk	DESIGNED -	REVISED -
c:\pw_work\pwidot\steffenmk\d0158776\D774423-sc-sht-PRHarrisonA.dgn		DRAWN -	REVISED -
	PLOT SCALE = 10.0000 ' / in.	CHECKED -	REVISED -
Default	PLOT DATE = 5/7/2014	DATE -	REVISED -

STATE OF ILLINOIS
DEPARTMENT OF TRANSPORTATION

CROSS SECTIONS
E. HARRISON A

SCALE: 5 | SHEET 13 OF 20 SHEETS | STA. 26+00.00 TO STA. 26+50.00

F.A.P. RTE.	SECTION	COUNTY	TOTAL SHEETS	SHEET NO.
91	5N	Coles	271	160

CONTRACT NO. 74423

ILLINOIS FED. AID PROJECT

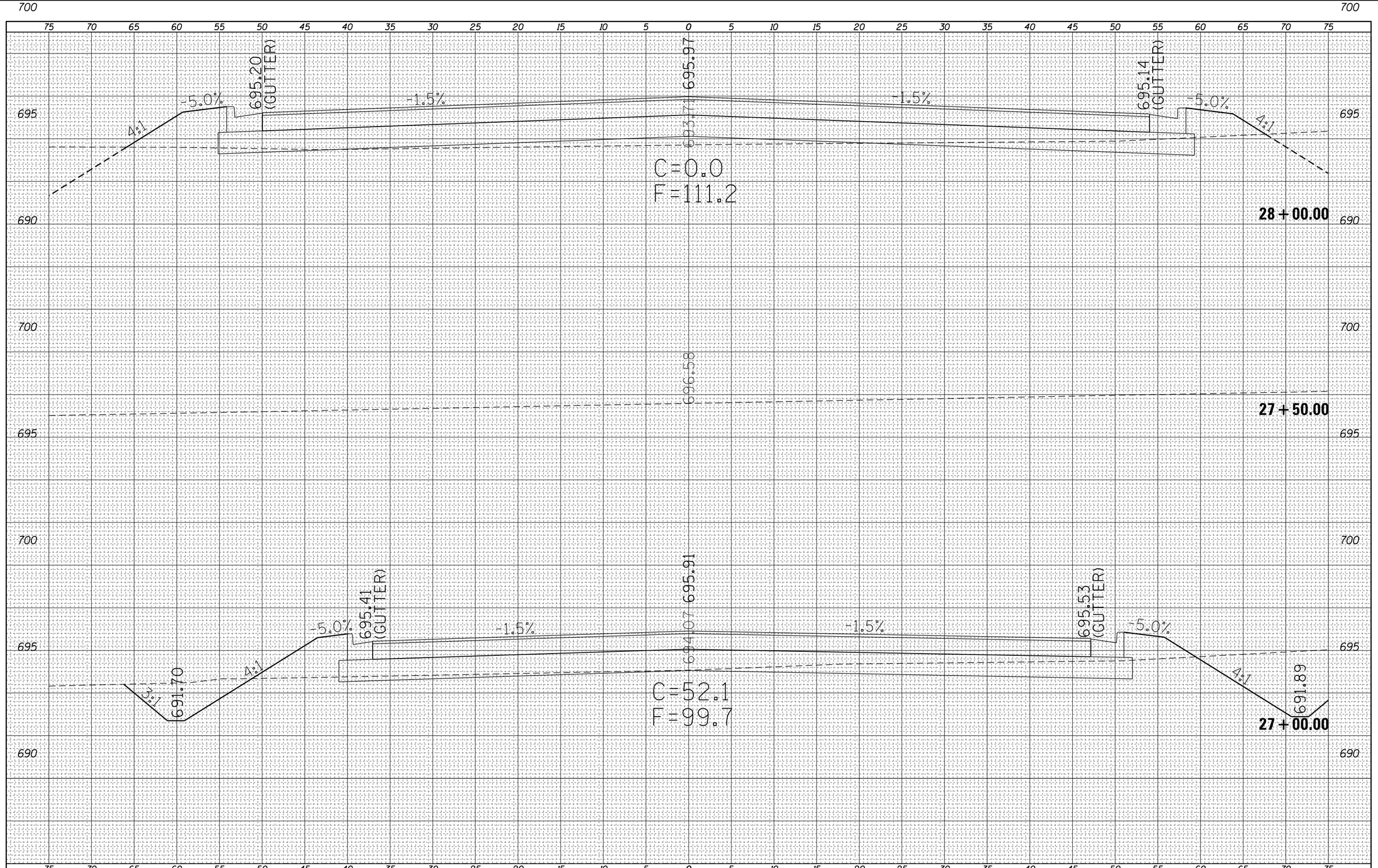

FINAL SURVEY		BY	DATE
NOTE BOOK	SURVEYED		
	PLOTTED		
	TEMPLATE		
	AREAS		
NO.	AREAS CHECKED		

ORIGINAL SURVEY		BY	DATE
NOTE BOOK	SURVEYED		
	PLOTTED		
	TEMPLATE		
	AREAS		
NO.	AREAS CHECKED		

FILE NAME =	USER NAME = steffenmk	DESIGNED -	REVISED -
c:\pw_work\pwidot\steffenmk\d0158776\D774423-sc-sht-PRHarrisonA.dgn		DRAWN -	REVISED -
	PLOT SCALE = 10.0000 ' / in.	CHECKED -	REVISED -
Default	PLOT DATE = 5/7/2014	DATE -	REVISED -

STATE OF ILLINOIS
DEPARTMENT OF TRANSPORTATION

CROSS SECTIONS
E. HARRISON A

SCALE: 5 | SHEET 14 OF 20 SHEETS | STA. 27+00.00 TO STA. 28+00.00

F.A.P. RTE.	SECTION	COUNTY	TOTAL SHEETS	SHEET NO.
91	5N	Coles	271	161

CONTRACT NO. 74423

ILLINOIS FED. AID PROJECT

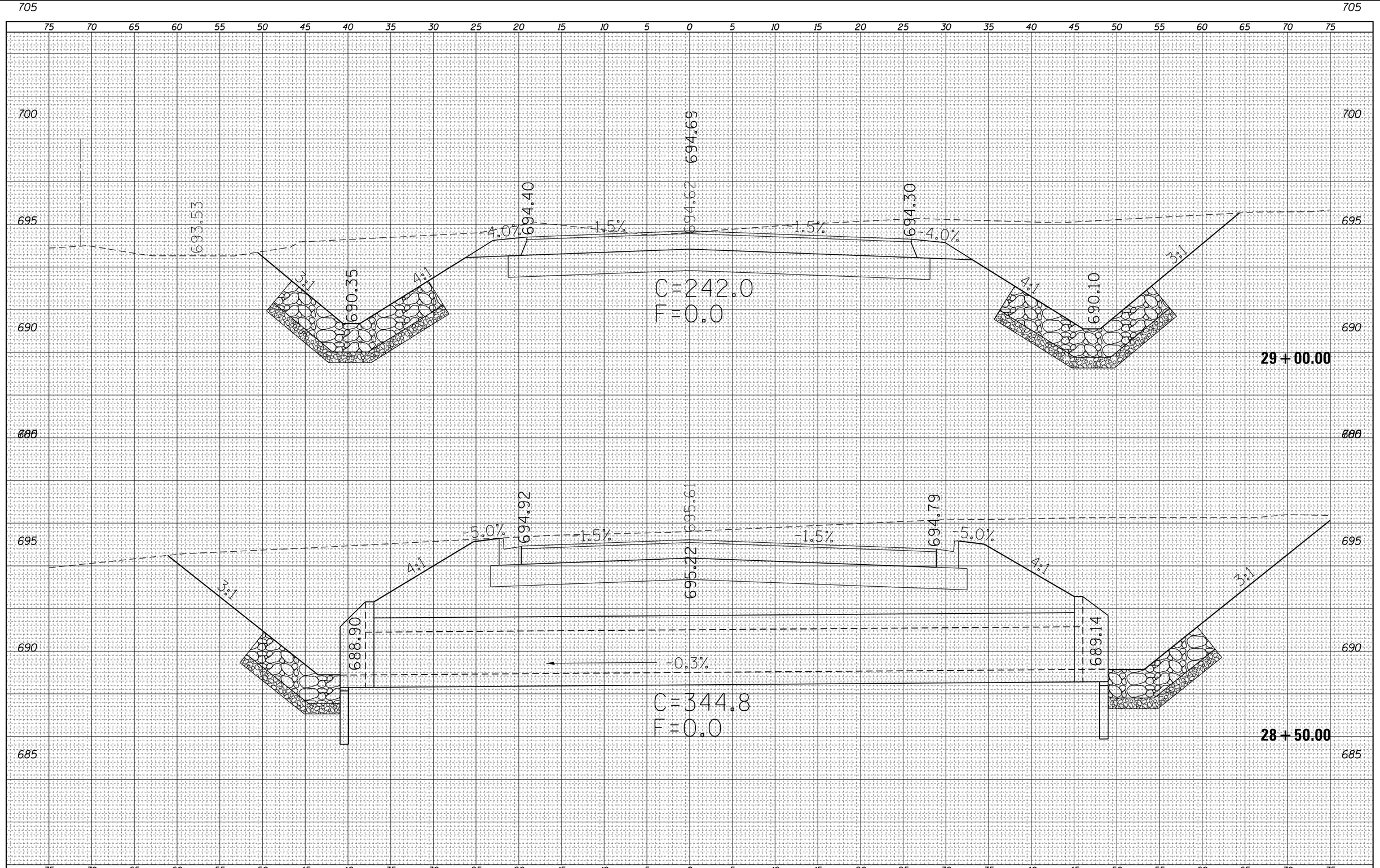

FINAL SURVEY	BY	DATE
SURVEYED		
PLOTTED		
TEMPLATE		
AREAS		
AREAS CHECKED		
NOTE BOOK NO.		

ORIGINAL SURVEY	BY	DATE
SURVEYED		
PLOTTED		
TEMPLATE		
AREAS		
AREAS CHECKED		
NOTE BOOK NO.		

FILE NAME = c:\pw_work\pwidot\steffenmk\d0158776\D774423-sc-sht-PRHarrisonA.dgn	USER NAME = steffenmk	DESIGNED -	REVISED -
		DRAWN -	REVISED -
	PLOT SCALE = 10.0000 ' / in.	CHECKED -	REVISED -
Default	PLOT DATE = 5/7/2014	DATE -	REVISED -

STATE OF ILLINOIS
DEPARTMENT OF TRANSPORTATION

CROSS SECTIONS
E. HARRISON A

SCALE: 5 | SHEET 15 OF 20 SHEETS | STA. 28+50.00 TO STA. 29+00.00

F.A.P. RTE.	SECTION	COUNTY	TOTAL SHEETS	SHEET NO.
91	5N	Coles	271	162

CONTRACT NO. 74423

ILLINOIS FED. AID PROJECT

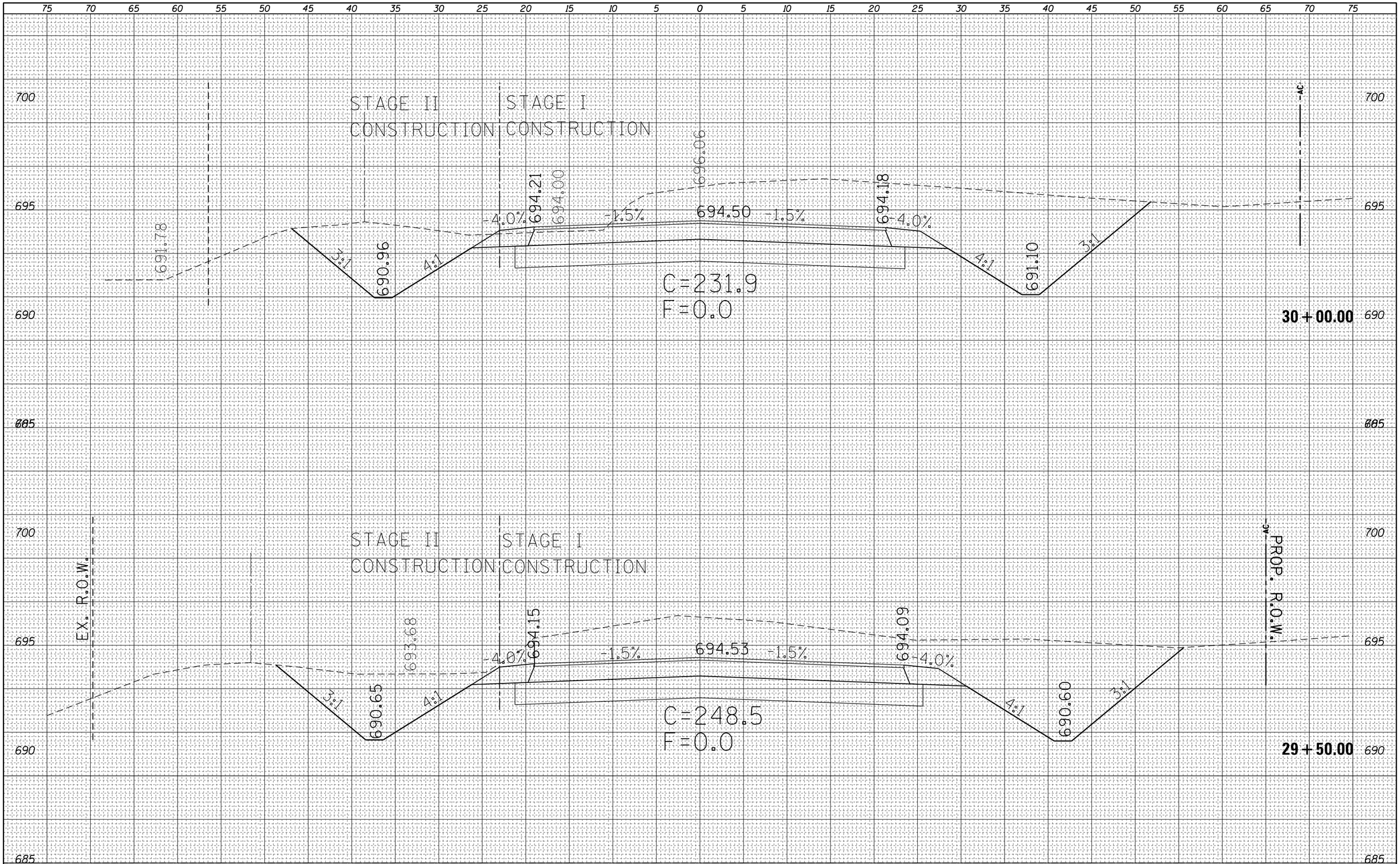

FINAL SURVEY		BY	DATE
NOTE BOOK	SURVEYED		
	PLOTTED		
	TEMPLATE		
	AREAS		
NO.	AREAS CHECKED		

ORIGINAL SURVEY		BY	DATE
NOTE BOOK	SURVEYED		
	PLOTTED		
	TEMPLATE		
	AREAS		
NO.	AREAS CHECKED		

FILE NAME = c:\pw_work\pwidot\steffenmk\d0158776\D774423-sc-sht-PRHarrisonA.dgn	USER NAME = steffenmk	DESIGNED -	REVISED -
		DRAWN -	REVISED -
	PLOT SCALE = 10.0000 ' / in.	CHECKED -	REVISED -
Default	PLOT DATE = 5/7/2014	DATE -	REVISED -

STATE OF ILLINOIS
DEPARTMENT OF TRANSPORTATION

CROSS SECTIONS
E. HARRISON A

SCALE: 5 | SHEET 16 OF 20 SHEETS | STA. 29+50.00 TO STA. 30+00.00

F.A.P. RTE.	SECTION	COUNTY	TOTAL SHEETS	SHEET NO.
91	5N	Coles	271	163

CONTRACT NO. 74423

ILLINOIS FED. AID PROJECT

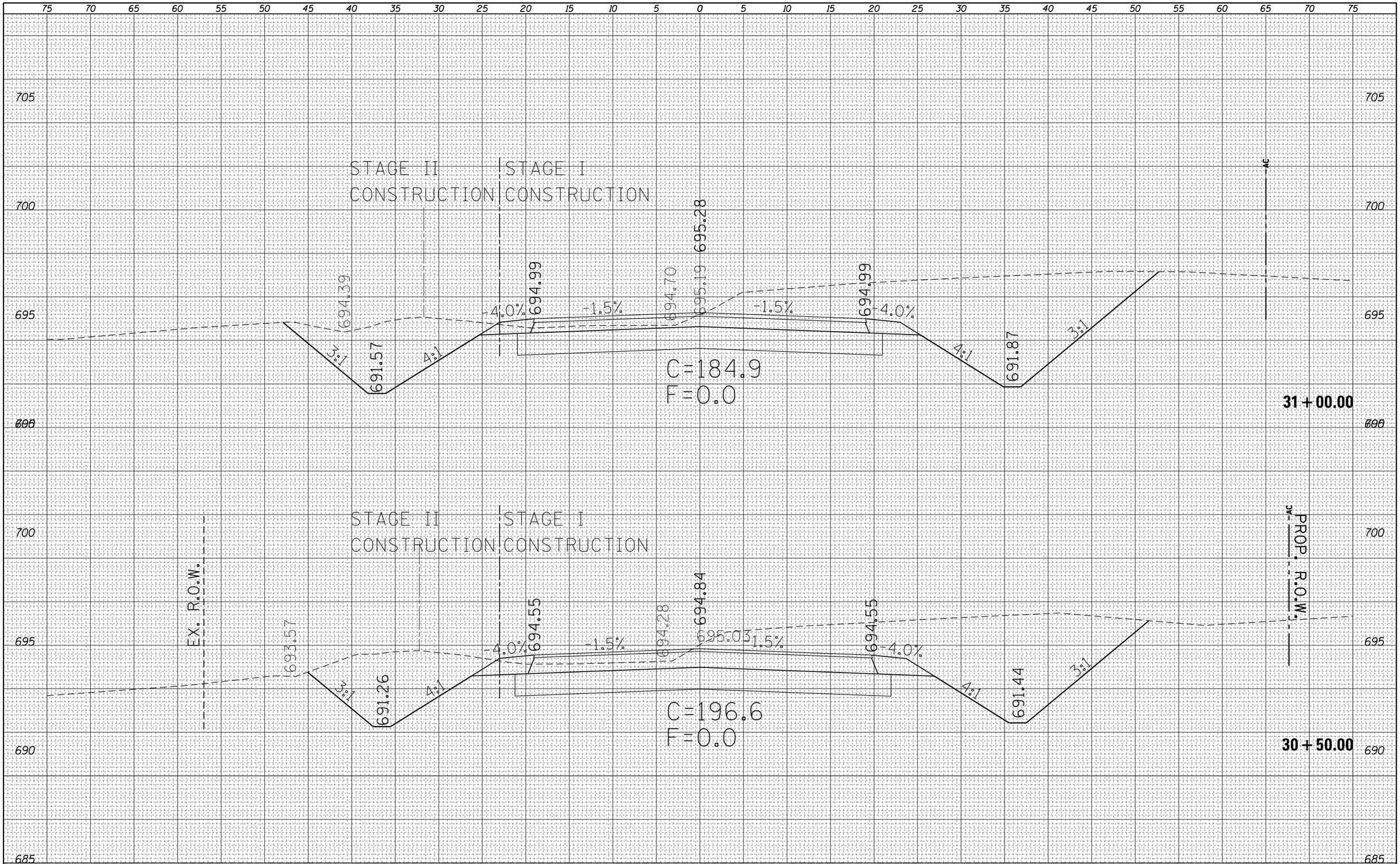

FINAL SURVEY		BY	DATE
NOTE BOOK	SURVEYED		
	PLOTTED		
	TEMPLATE		
	AREAS		
NO.	AREAS CHECKED		

ORIGINAL SURVEY		BY	DATE
NOTE BOOK	SURVEYED		
	PLOTTED		
	TEMPLATE		
	AREAS		
NO.	AREAS CHECKED		

FILE NAME = c:\pw_work\pwidot\steffenmk\d0158776\D774423-sc-sht-PRHarrisonA.dgn	USER NAME = steffenmk	DESIGNED -	REVISED -
		DRAWN -	REVISED -
	PLOT SCALE = 10.0000 ' / in.	CHECKED -	REVISED -
Default	PLOT DATE = 5/7/2014	DATE -	REVISED -

STATE OF ILLINOIS
DEPARTMENT OF TRANSPORTATION

CROSS SECTIONS
E. HARRISON A

SCALE: 5 | SHEET 17 OF 20 SHEETS | STA. 30+50.00 TO STA. 37+00.00

F.A.P. RTE.	SECTION	COUNTY	TOTAL SHEETS	SHEET NO.
91	5N	Coles	271	164

CONTRACT NO. 74423

ILLINOIS FED. AID PROJECT

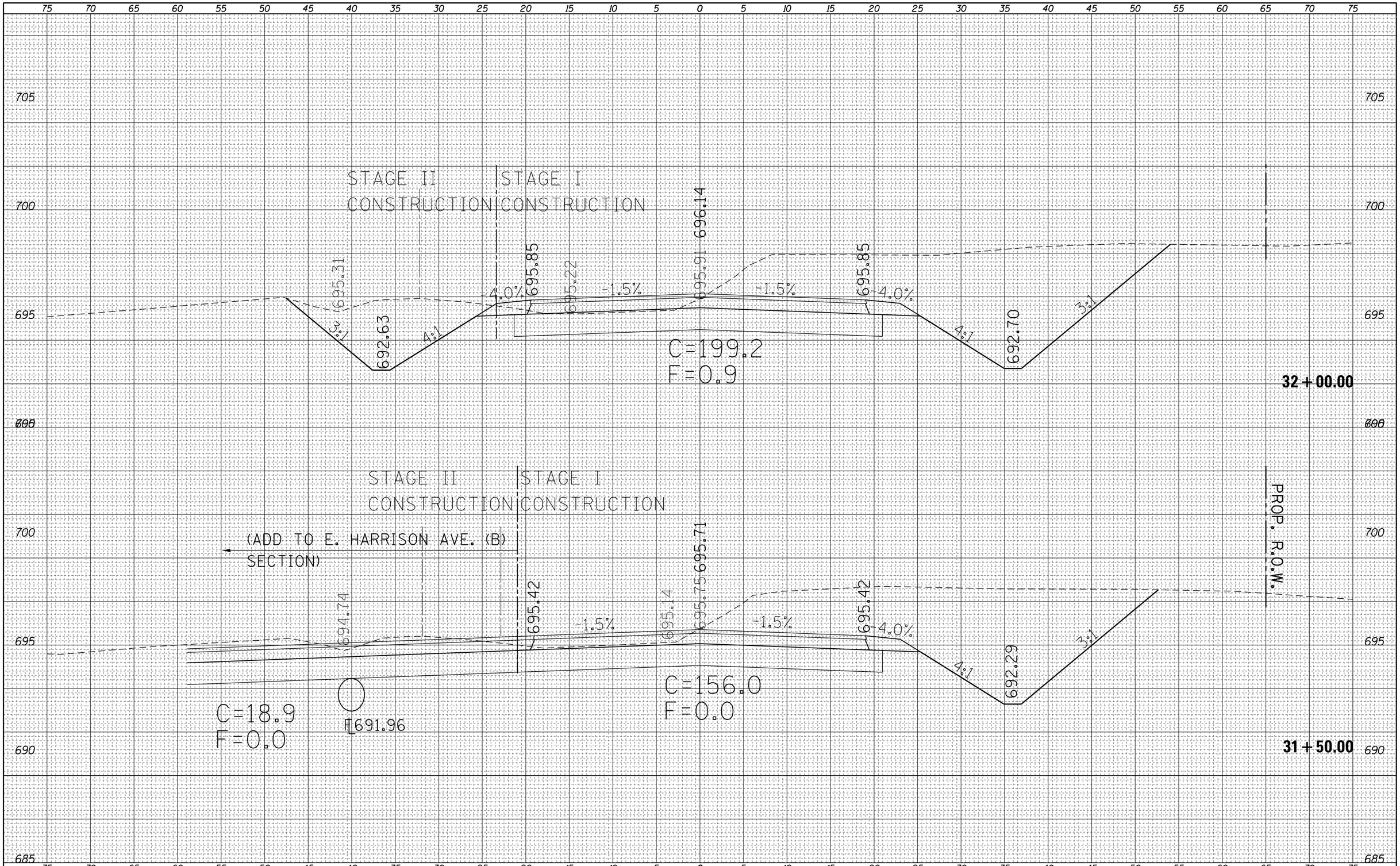

FINAL SURVEY		BY	DATE
NOTE BOOK	SURVEYED		
	PLOTTED		
	TEMPLATE		
	AREAS		
NO.	AREAS CHECKED		

ORIGINAL SURVEY		BY	DATE
NOTE BOOK	SURVEYED		
	PLOTTED		
	TEMPLATE		
	AREAS		
NO.	AREAS CHECKED		

FILE NAME = c:\pw_work\pwidot\steffenmk\d0158776\D774423-sc-sht-PRHarrisonA.dgn	USER NAME = steffenmk	DESIGNED -	REVISED -
		DRAWN -	REVISED -
	PLOT SCALE = 10.0000 ' / in.	CHECKED -	REVISED -
Default	PLOT DATE = 5/7/2014	DATE -	REVISED -

STATE OF ILLINOIS
DEPARTMENT OF TRANSPORTATION

CROSS SECTIONS
E. HARRISON A

SCALE: 5 | SHEET 18 OF 20 SHEETS | STA. 31+50.00 TO STA. 32+00.00

F.A.P. RTE.	SECTION	COUNTY	TOTAL SHEETS	SHEET NO.
91	5N	Coles	271	165

CONTRACT NO. 74423

ILLINOIS FED. AID PROJECT

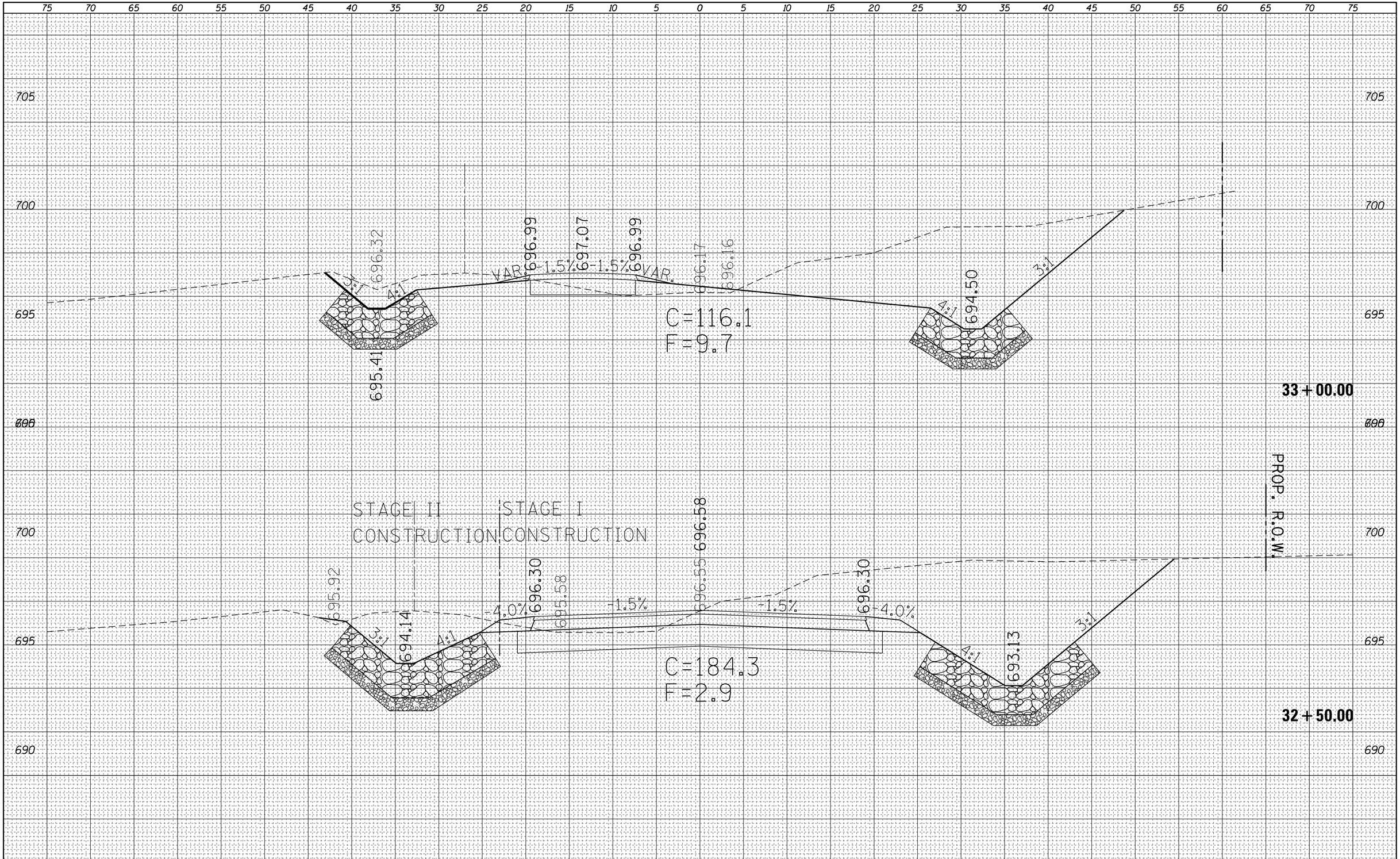

FINAL SURVEY						
NOTE BOOK	SURVEYED					
	PLOTTED					
	TEMPLATE					
	AREAS					
NO.	AREAS CHECKED					

ORIGINAL SURVEY						
NOTE BOOK	SURVEYED					
	PLOTTED					
	TEMPLATE					
	AREAS					
NO.	AREAS CHECKED					

FILE NAME = c:\pw_work\pwidot\steffenmk\d0158776\D774423-sht-PRHarrisonA.dgn	USER NAME = steffenmk	DESIGNED -	REVISED -
		DRAWN -	REVISED -
	PLOT SCALE = 10.0000 ' / in.	CHECKED -	REVISED -
Default	PLOT DATE = 5/7/2014	DATE -	REVISED -

STATE OF ILLINOIS
DEPARTMENT OF TRANSPORTATION

CROSS SECTIONS
E. HARRISON A

SCALE: 5 | SHEET 19 OF 20 SHEETS | STA. 32+50.00 TO STA. 33+00.00

F.A.P. RTE.	SECTION	COUNTY	TOTAL SHEETS	SHEET NO.
91	5N	Coles	271	166

CONTRACT NO. 74423

ILLINOIS FED. AID PROJECT

FINAL SURVEY		BY	DATE
	SURVEYED		
	PLOTTED		
	TEMPLATE		
NOTE BOOK	AREAS		
	AREAS CHECKED		
NO.			

ORIGINAL SURVEY		BY	DATE
	SURVEYED		
	PLOTTED		
	TEMPLATE		
NOTE BOOK	AREAS		
	AREAS CHECKED		
NO.			

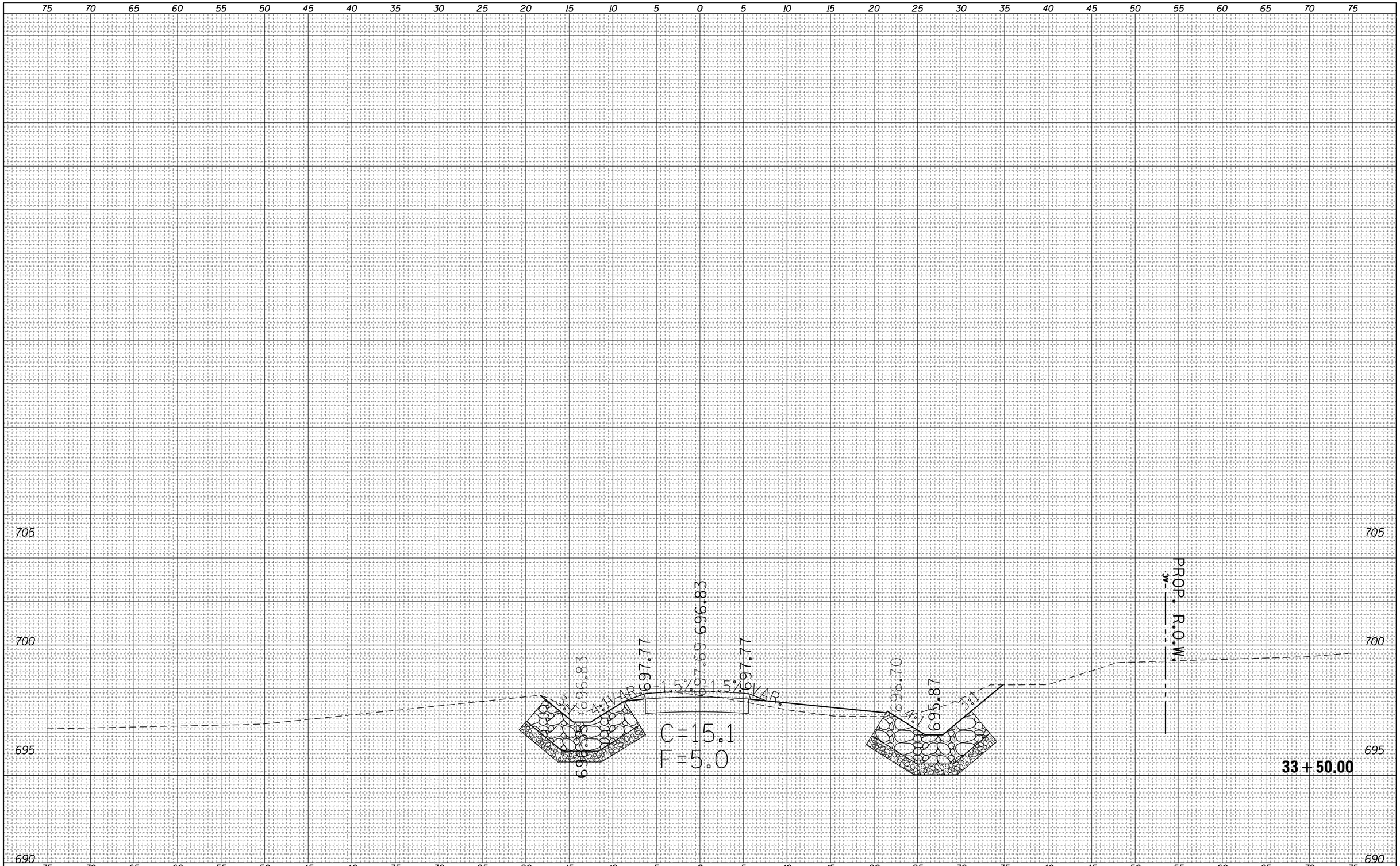

FILE NAME =	USER NAME = steffenmk	DESIGNED -	REVISED -
c:\pw_work\pwidot\steffenmk\d0158776\D774423-sc-sht-PRHarrisonA.dgn		DRAWN -	REVISED -
	PLOT SCALE = 10.0000 ' / in.	CHECKED -	REVISED -
Default	PLOT DATE = 5/7/2014	DATE -	REVISED -

STATE OF ILLINOIS
DEPARTMENT OF TRANSPORTATION

CROSS SECTIONS
E. HARRISON A

SCALE: 5 | SHEET 20 OF 20 SHEETS | STA. 33+50.00 TO STA. 33+50.00

F.A.P. RTE.	SECTION	COUNTY	TOTAL SHEETS	SHEET NO.
91	5N	Coles	271	167

CONTRACT NO. 74423

ILLINOIS FED. AID PROJECT

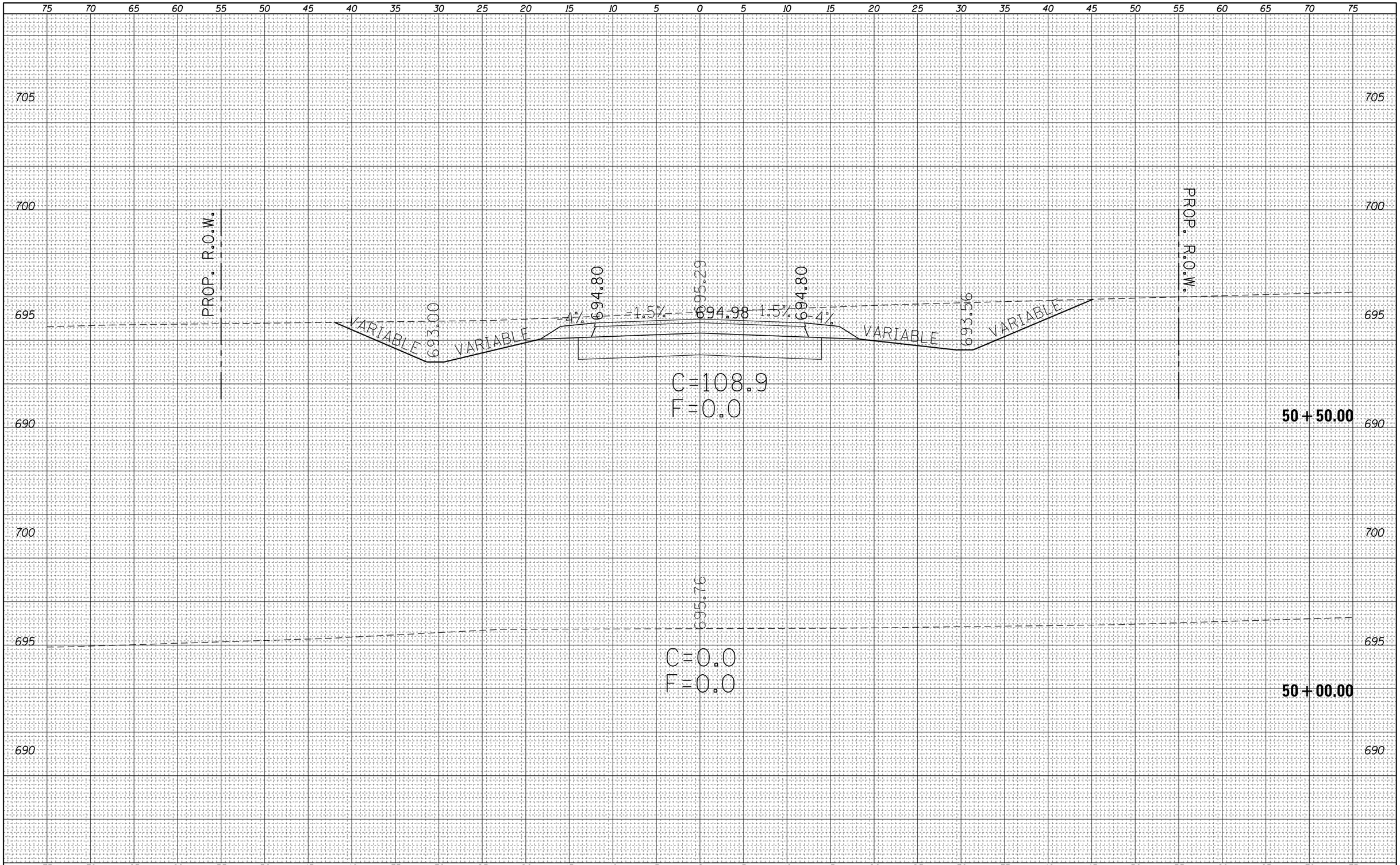

FINAL SURVEY		BY	DATE
NOTE BOOK	SURVEYED		
	PLOTTED		
	TEMPLATE		
	AREAS		
NO.	AREAS CHECKED		

ORIGINAL SURVEY		BY	DATE
NOTE BOOK	SURVEYED		
	PLOTTED		
	TEMPLATE		
	AREAS		
NO.	AREAS CHECKED		

FILE NAME =	USER NAME = steffenmk	DESIGNED -	REVISED -
c:\pw_work\pwidot\steffenmk\d0158776\D774423-sc-sht-PRHarrisonB.dgn		DRAWN -	REVISED -
	PLOT SCALE = 10.0000 ' / in.	CHECKED -	REVISED -
Default	PLOT DATE = 5/7/2014	DATE -	REVISED -

STATE OF ILLINOIS
DEPARTMENT OF TRANSPORTATION

CROSS SECTIONS
E. HARRISON B

SCALE: 5 | SHEET 1 OF 41 SHEETS | STA. 50+00.00 TO STA. 50+50.00

F.A.P. RTE.	SECTION	COUNTY	TOTAL SHEETS	SHEET NO.
91	5N	Coles	271	168

CONTRACT NO. 74423

ILLINOIS FED. AID PROJECT

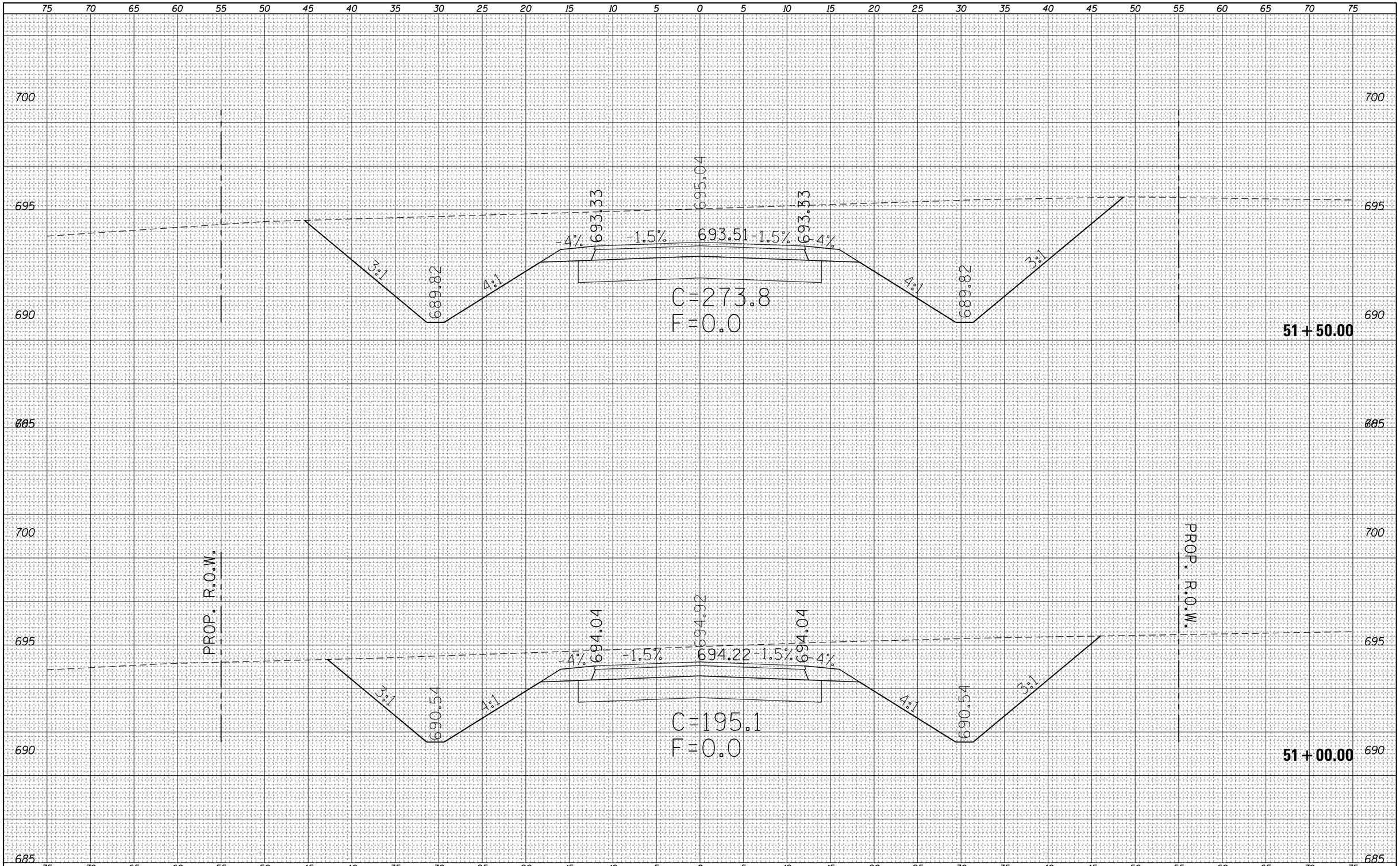

FINAL SURVEY		BY	DATE
NOTE BOOK	SURVEYED		
	PLOTTED		
	TEMPLATE		
	AREAS		
NO.	AREAS CHECKED		

ORIGINAL SURVEY		BY	DATE
NOTE BOOK	SURVEYED		
	PLOTTED		
	TEMPLATE		
	AREAS		
NO.	AREAS CHECKED		

FILE NAME = c:\pw_work\pwidot\steffenmk\d0158776\D774423-sc-sht-PRHarrisonB.dgn	USER NAME = steffenmk	DESIGNED -	REVISED -	STATE OF ILLINOIS DEPARTMENT OF TRANSPORTATION
		DRAWN -	REVISED -	
	PLOT SCALE = 10.0000 ' / in.	CHECKED -	REVISED -	
Default	PLOT DATE = 5/7/2014	DATE -	REVISED -	

CROSS SECTIONS
E. HARRISON B

SCALE: 5 | SHEET 2 OF 41 SHEETS | STA. 51+00.00 TO STA. 51+50.00

F.A.P. RTE.	SECTION	COUNTY	TOTAL SHEETS	SHEET NO.
91	5N	Coles	271	169

CONTRACT NO. 74423

ILLINOIS FED. AID PROJECT

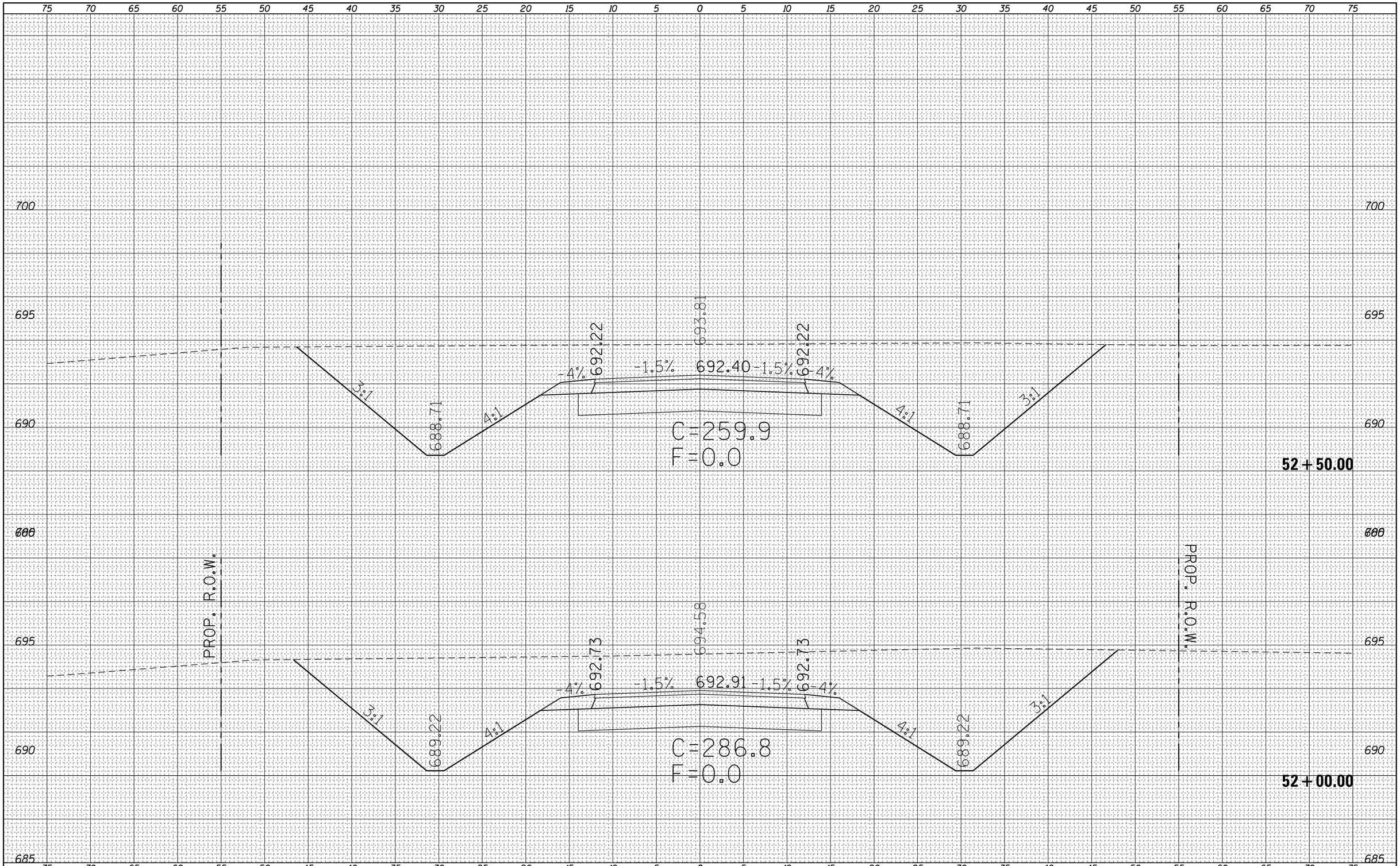

FINAL SURVEY		BY	DATE
	SURVEYED		
	PLOTTED		
	TEMPLATE		
NOTE BOOK	AREAS		
	AREAS CHECKED		
NO.			

ORIGINAL SURVEY		BY	DATE
	SURVEYED		
	PLOTTED		
	TEMPLATE		
NOTE BOOK	AREAS		
	AREAS CHECKED		
NO.			

FILE NAME = c:\pw_work\pwidot\steffenmk\d0158776\D774423-sheet-sc-sht-PRHarrisonB.dgn	USER NAME = steffenmk	DESIGNED -	REVISED -
		DRAWN -	REVISED -
	PLOT SCALE = 10.0000 ' / in.	CHECKED -	REVISED -
Default	PLOT DATE = 5/7/2014	DATE -	REVISED -

STATE OF ILLINOIS
DEPARTMENT OF TRANSPORTATION

CROSS SECTIONS
E. HARRISON B

SCALE: 5 | SHEET 3 OF 41 SHEETS | STA. 52+00.00 TO STA. 52+50.00

F.A.P. RTE.	SECTION	COUNTY	TOTAL SHEETS	SHEET NO.
91	5N	Coles	271	170

CONTRACT NO. 74423

ILLINOIS FED. AID PROJECT

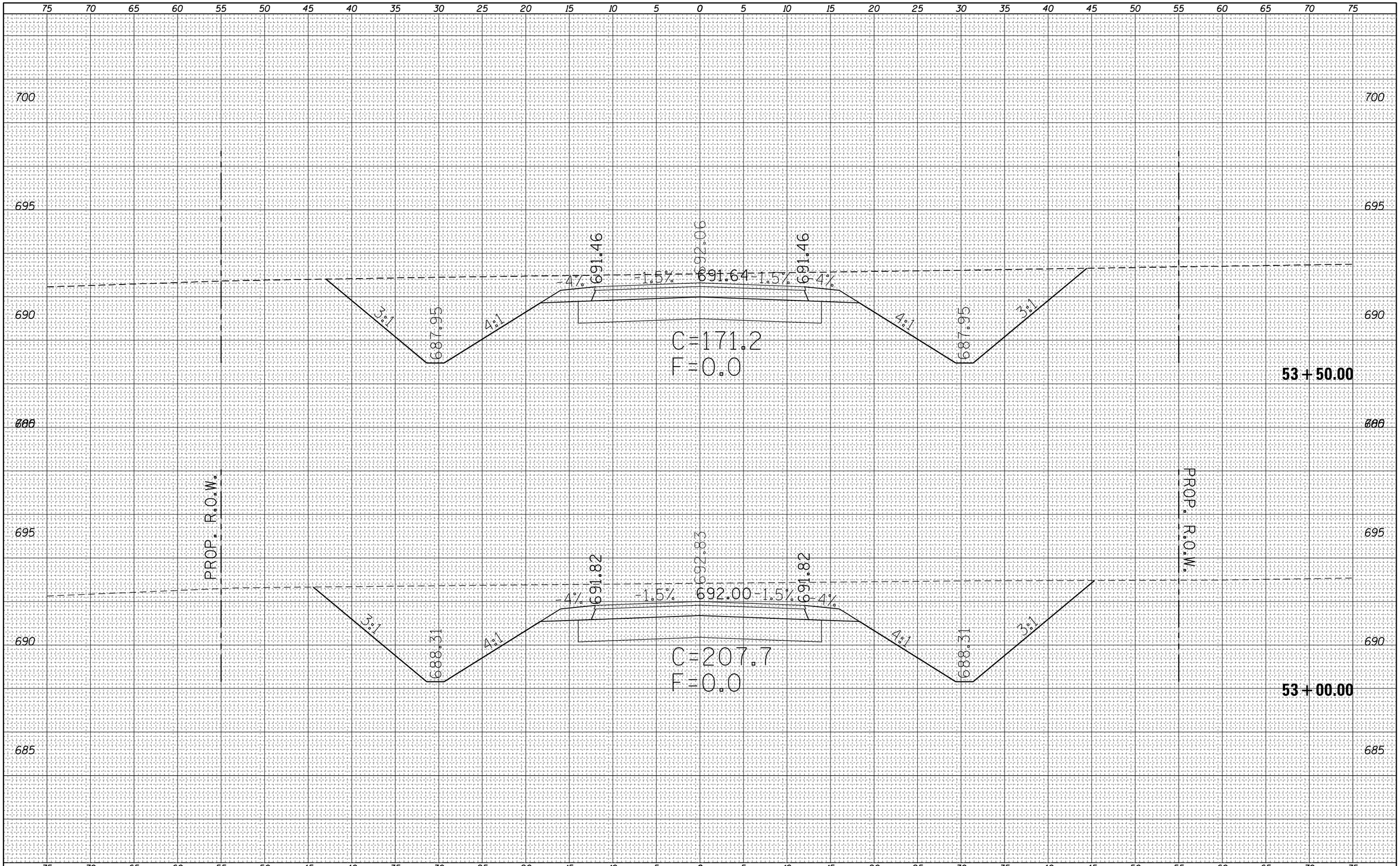

FINAL SURVEY		BY	DATE
NOTE BOOK	SURVEYED		
	PLOTTED		
	TEMPLATE		
	AREAS		
NO.	AREAS CHECKED		

ORIGINAL SURVEY		BY	DATE
NOTE BOOK	SURVEYED		
	PLOTTED		
	TEMPLATE		
	AREAS		
NO.	AREAS CHECKED		

FILE NAME =	USER NAME = steffenmk	DESIGNED -	REVISED -
c:\pw_work\pwidot\steffenmk\d0158776\D774423-sc-sht-PRHarrisonB.dgn		DRAWN -	REVISED -
	PLOT SCALE = 10.0000 ' / in.	CHECKED -	REVISED -
Default	PLOT DATE = 5/7/2014	DATE -	REVISED -

STATE OF ILLINOIS
DEPARTMENT OF TRANSPORTATION

CROSS SECTIONS
E. HARRISON B

SCALE: 5 | SHEET 4 OF 41 SHEETS | STA. 53+00.00 TO STA. 53+50.00

F.A.P. RTE.	SECTION	COUNTY	TOTAL SHEETS	SHEET NO.
91	5N	Coles	271	171

CONTRACT NO. 74423

ILLINOIS FED. AID PROJECT

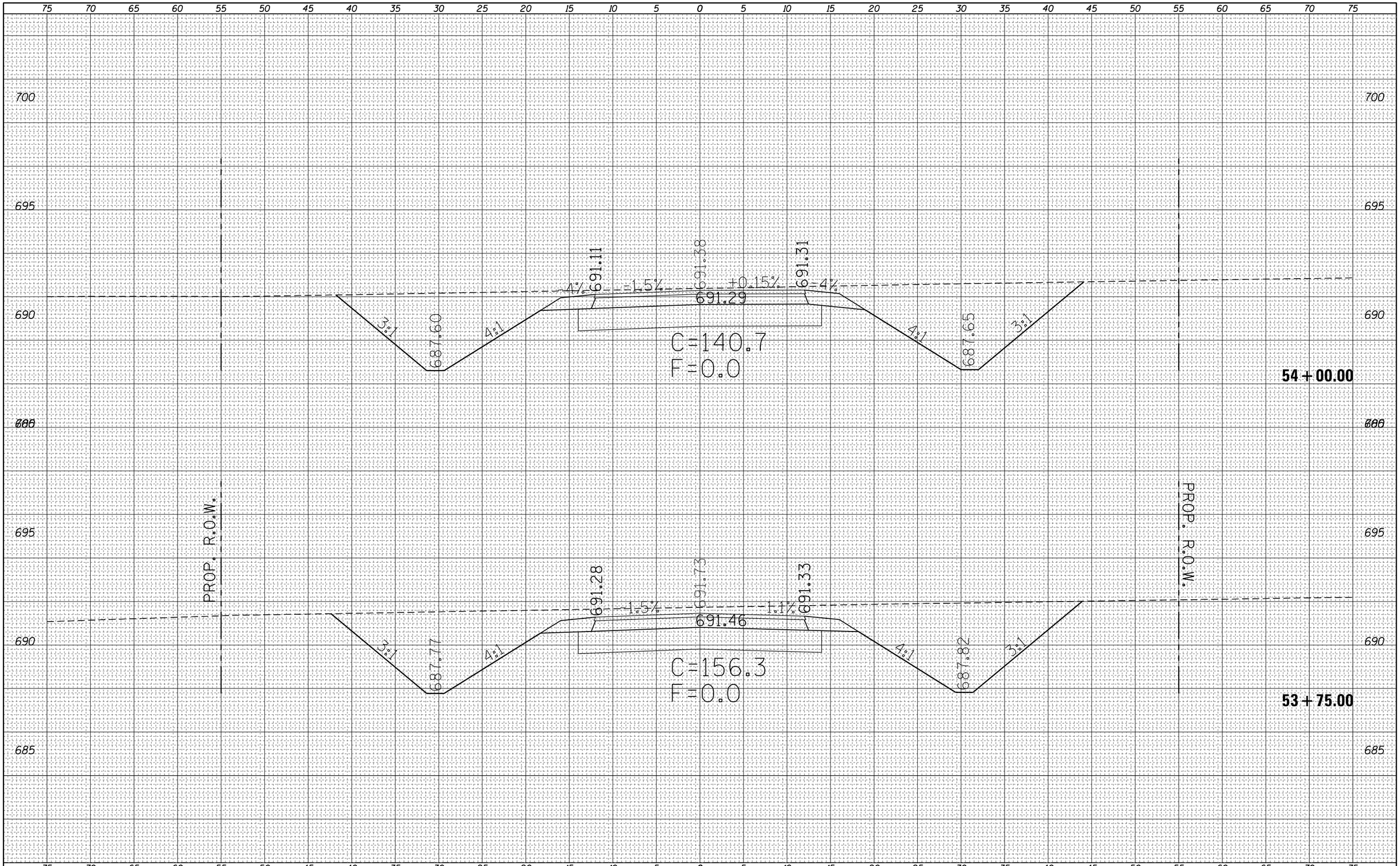

FINAL SURVEY		BY	DATE
NOTE BOOK	SURVEYED		
	PLOTTED		
	TEMPLATE		
	AREAS		
NO.	AREAS CHECKED		

ORIGINAL SURVEY		BY	DATE
NOTE BOOK	SURVEYED		
	PLOTTED		
	TEMPLATE		
	AREAS		
NO.	AREAS CHECKED		

FILE NAME =	USER NAME = steffenmk	DESIGNED -	REVISED -
c:\pw_work\pwidot\steffenmk\d0158776\D774423-sc-sht-PRHarrisonB.dgn		DRAWN -	REVISED -
	PLOT SCALE = 10.0000 ' / in.	CHECKED -	REVISED -
Default	PLOT DATE = 5/7/2014	DATE -	REVISED -

STATE OF ILLINOIS
DEPARTMENT OF TRANSPORTATION

CROSS SECTIONS
E. HARRISON B

SCALE: 5 | SHEET 5 OF 41 SHEETS | STA. 53+75.00 TO STA. 54+00.00

F.A.P. RTE.	SECTION	COUNTY	TOTAL SHEETS	SHEET NO.
91	5N	Coles	271	172

CONTRACT NO. 74423

ILLINOIS FED. AID PROJECT

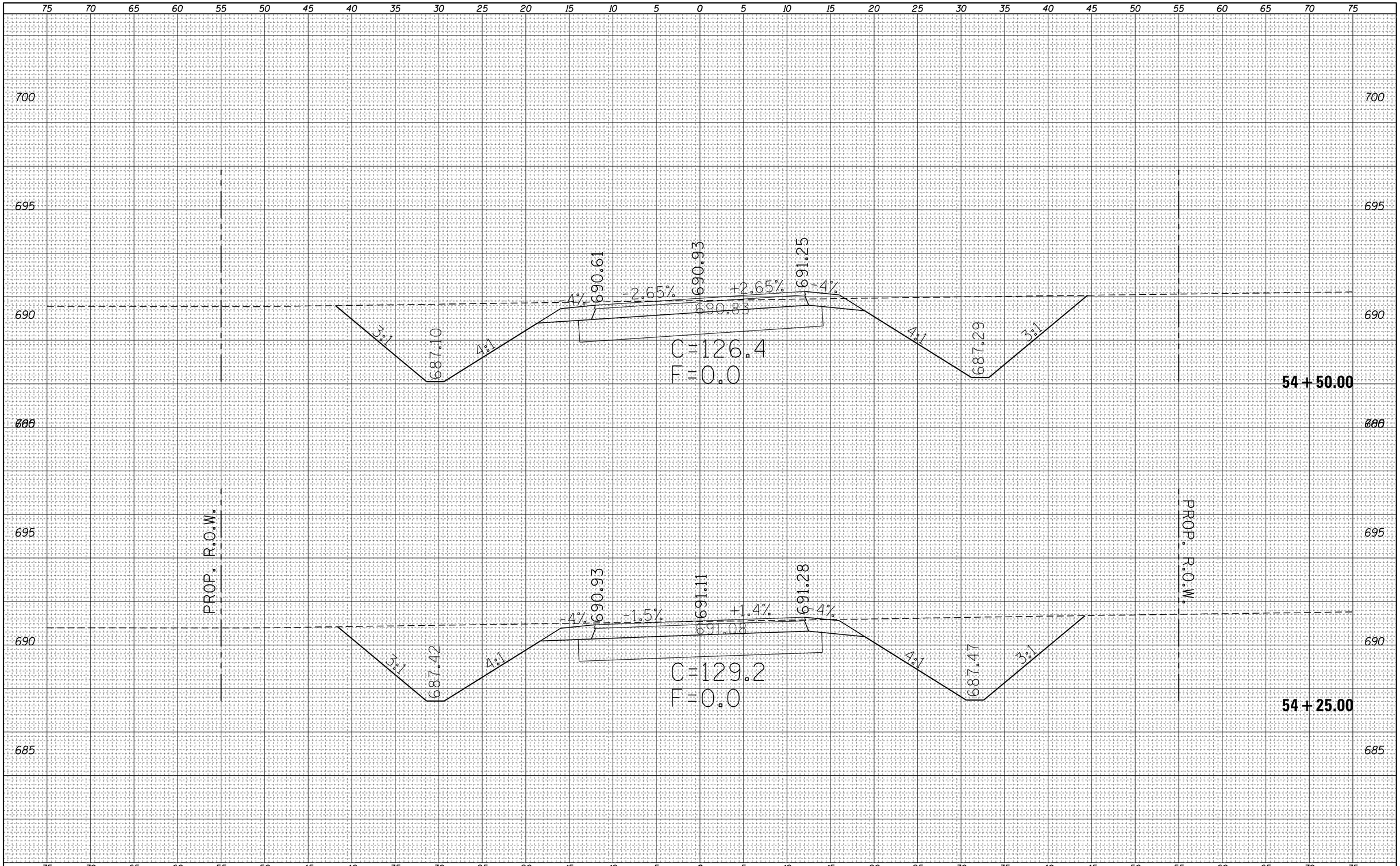

FINAL SURVEY		BY	DATE
NOTE BOOK	SURVEYED		
	PLOTTED		
	TEMPLATE		
	AREAS		
NO.	AREAS CHECKED		

ORIGINAL SURVEY		BY	DATE
NOTE BOOK	SURVEYED		
	PLOTTED		
	TEMPLATE		
	AREAS		
NO.	AREAS CHECKED		

FILE NAME = c:\pw_work\pwidot\steffenmk\d0158776\D774423-sc-sht-PRHarrisonB.dgn	USER NAME = steffenmk	DESIGNED -	REVISED -
		DRAWN -	REVISED -
	PLOT SCALE = 10.0000 ' / in.	CHECKED -	REVISED -
Default	PLOT DATE = 5/7/2014	DATE -	REVISED -

STATE OF ILLINOIS
DEPARTMENT OF TRANSPORTATION

CROSS SECTIONS
E. HARRISON B

SCALE: 5 | SHEET 6 OF 41 SHEETS | STA. 54+25.00 TO STA. 54+50.00

F.A.P. RTE.	SECTION	COUNTY	TOTAL SHEETS	SHEET NO.
91	5N	Coles	271	173

CONTRACT NO. 74423

ILLINOIS FED. AID PROJECT

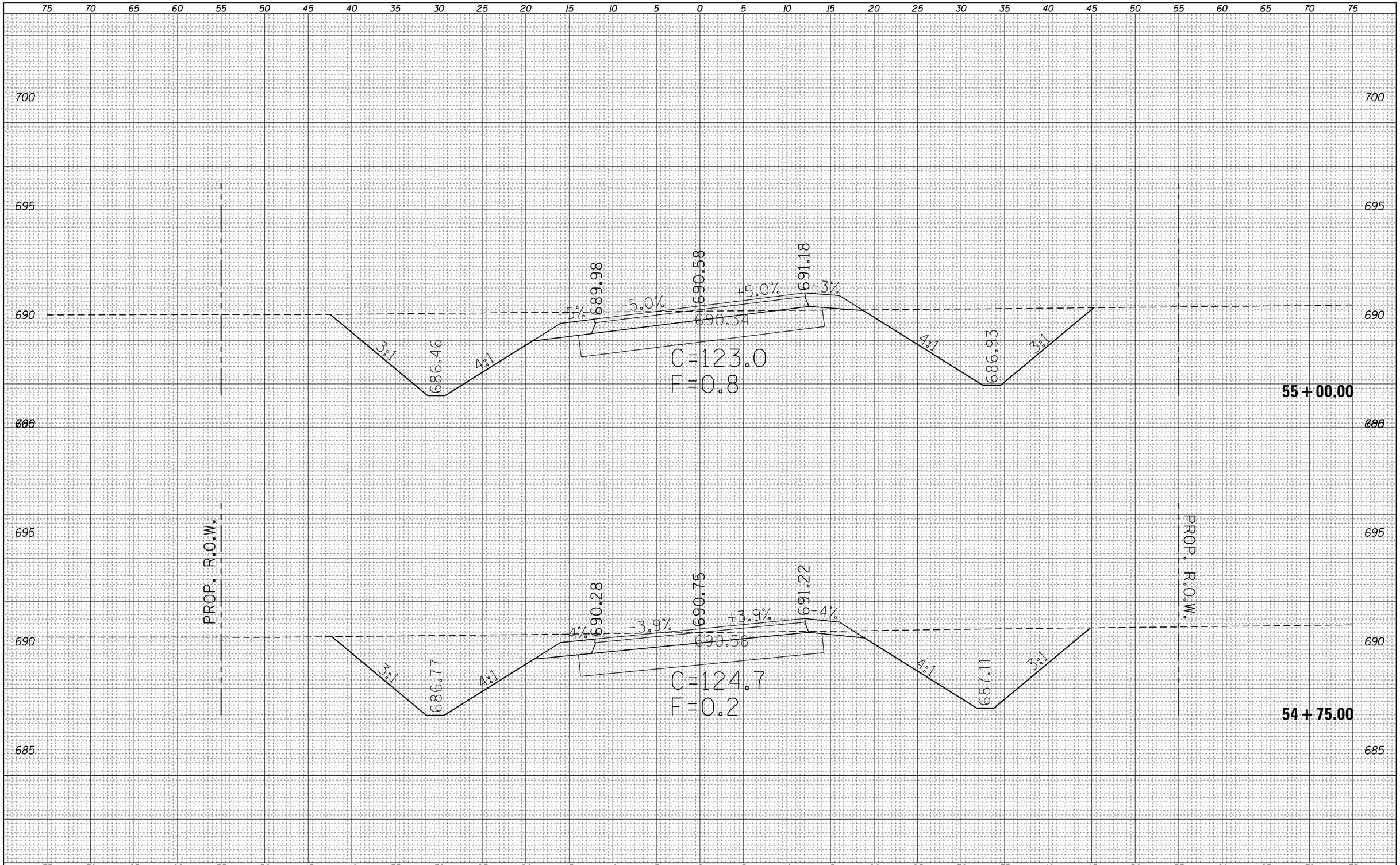

FINAL SURVEY		BY	DATE
NOTE BOOK	SURVEYED		
	PLOTTED		
	TEMPLATE		
	AREAS		
NO.	AREAS CHECKED		

ORIGINAL SURVEY		BY	DATE
NOTE BOOK	SURVEYED		
	PLOTTED		
	TEMPLATE		
	AREAS		
NO.	AREAS CHECKED		

FILE NAME =	USER NAME = steffenmk	DESIGNED -	REVISED -
c:\pw_work\pwidot\steffenmk\d0158776\D774423-sc-sht-PRHarrisonB.dgn		DRAWN -	REVISED -
	PLOT SCALE = 10.0000 ' / in.	CHECKED -	REVISED -
Default	PLOT DATE = 5/7/2014	DATE -	REVISED -

STATE OF ILLINOIS
DEPARTMENT OF TRANSPORTATION

CROSS SECTIONS
E. HARRISON B

SCALE: 5 | SHEET 7 OF 41 SHEETS | STA. 54+75.00 TO STA. 55+00.00

F.A.P. RTE.	SECTION	COUNTY	TOTAL SHEETS	SHEET NO.
91	5N	Coles	271	174

CONTRACT NO. 74423

ILLINOIS FED. AID PROJECT

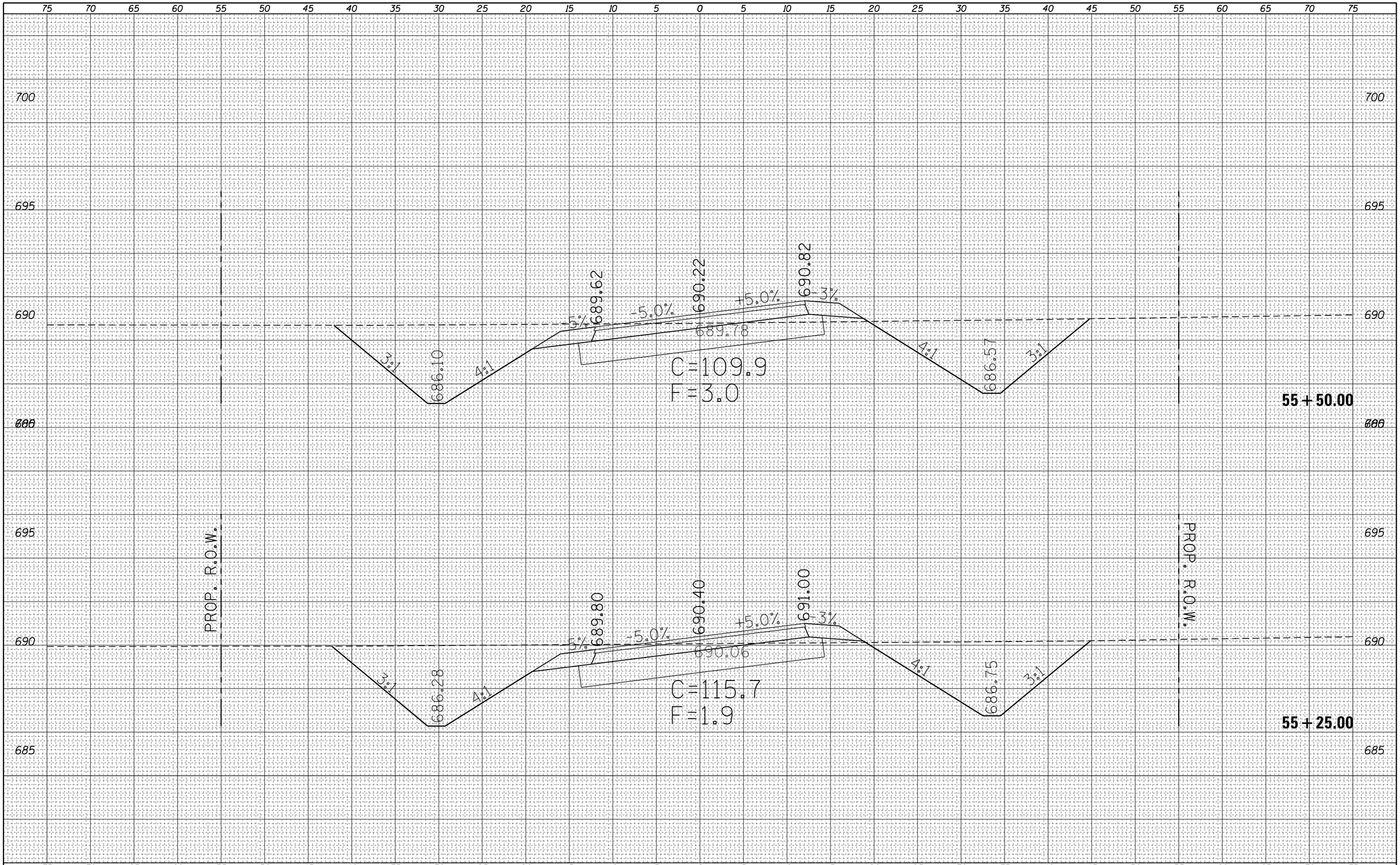

FINAL SURVEY		BY	DATE
NOTE BOOK	SURVEYED		
	PLOTTED		
	TEMPLATE		
	AREAS		
NO.	AREAS CHECKED		

ORIGINAL SURVEY		BY	DATE
NOTE BOOK	SURVEYED		
	PLOTTED		
	TEMPLATE		
	AREAS		
NO.	AREAS CHECKED		

FILE NAME =	USER NAME = steffenmk	DESIGNED -	REVISED -
c:\pw_work\pwidot\steffenmk\d0158776\D774423-sc-sht-PRHarrisonB.dgn		DRAWN -	REVISED -
	PLOT SCALE = 10.0000 ' / in.	CHECKED -	REVISED -
Default	PLOT DATE = 5/7/2014	DATE -	REVISED -

STATE OF ILLINOIS
DEPARTMENT OF TRANSPORTATION

CROSS SECTIONS
E. HARRISON B

SCALE: 5 | SHEET 8 OF 41 SHEETS | STA. 55+25.00 TO STA. 55+50.00

F.A.P. RTE.	SECTION	COUNTY	TOTAL SHEETS	SHEET NO.
91	5N	Coles	271	175

CONTRACT NO. 74423

ILLINOIS FED. AID PROJECT

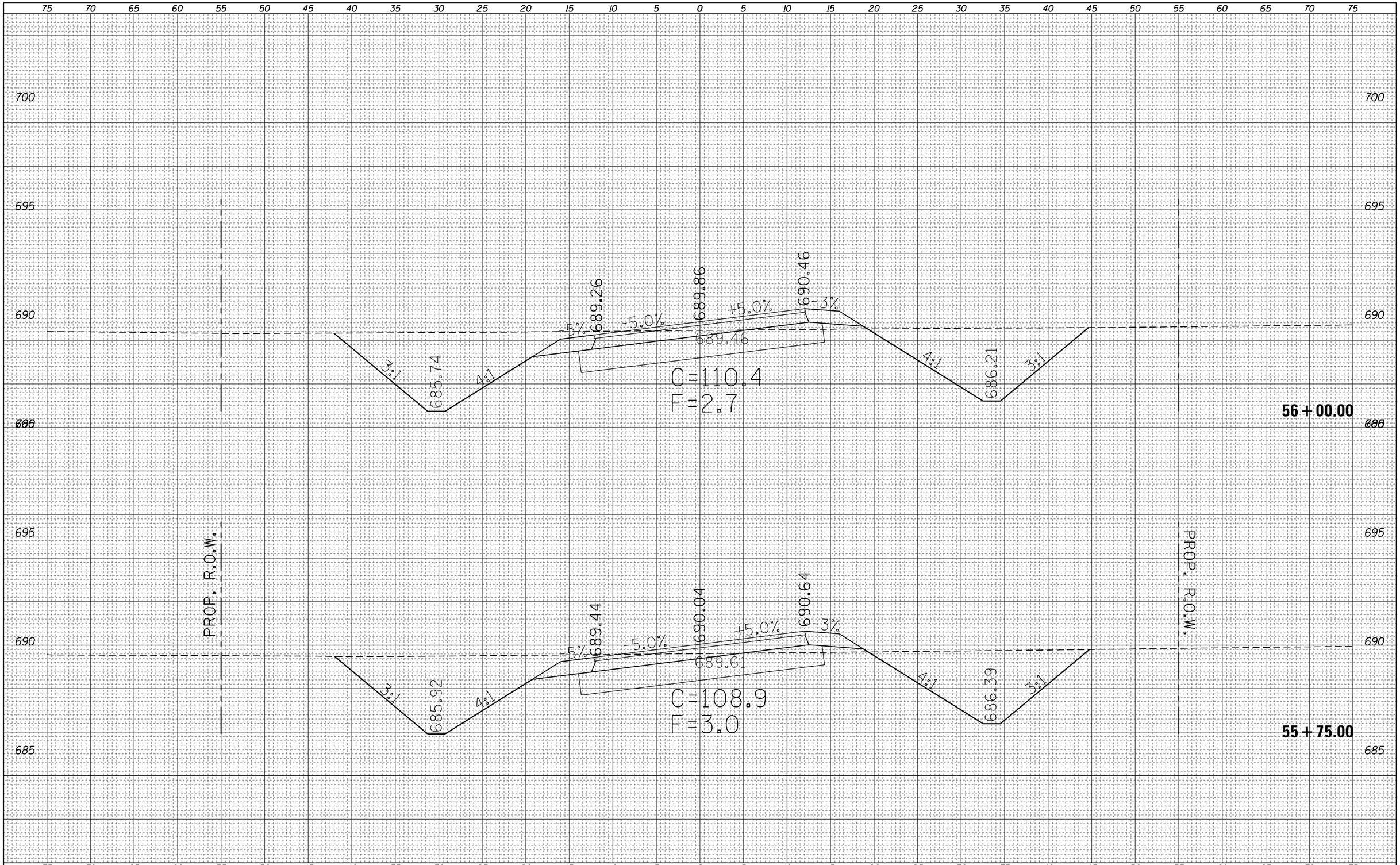

FILE NAME =	USER NAME = steffenmk	DESIGNED -	REVISED -
c:\pw_work\pwidot\steffenmk\d0158776\D774423-sc-sht-PRHarrisonB.dgn		DRAWN -	REVISED -
	PLOT SCALE = 10.0000 ' / in.	CHECKED -	REVISED -
Default	PLOT DATE = 5/7/2014	DATE -	REVISED -

STATE OF ILLINOIS
DEPARTMENT OF TRANSPORTATION

CROSS SECTIONS
E. HARRISON B

SCALE: 5 | SHEET 9 OF 41 SHEETS | STA. 55+75.00 TO STA. 56+00.00

F.A.P. RTE.	SECTION	COUNTY	TOTAL SHEETS	SHEET NO.
91	5N	Coles	271	176

CONTRACT NO. 74423

ILLINOIS FED. AID PROJECT

FINAL SURVEY		BY	DATE
NOTE BOOK	SURVEYED		
	PLOTTED		
	TEMPLATE		
	AREAS		
NO.	AREAS CHECKED		

ORIGINAL SURVEY		BY	DATE
NOTE BOOK	SURVEYED		
	PLOTTED		
	TEMPLATE		
	AREAS		
NO.	AREAS CHECKED		

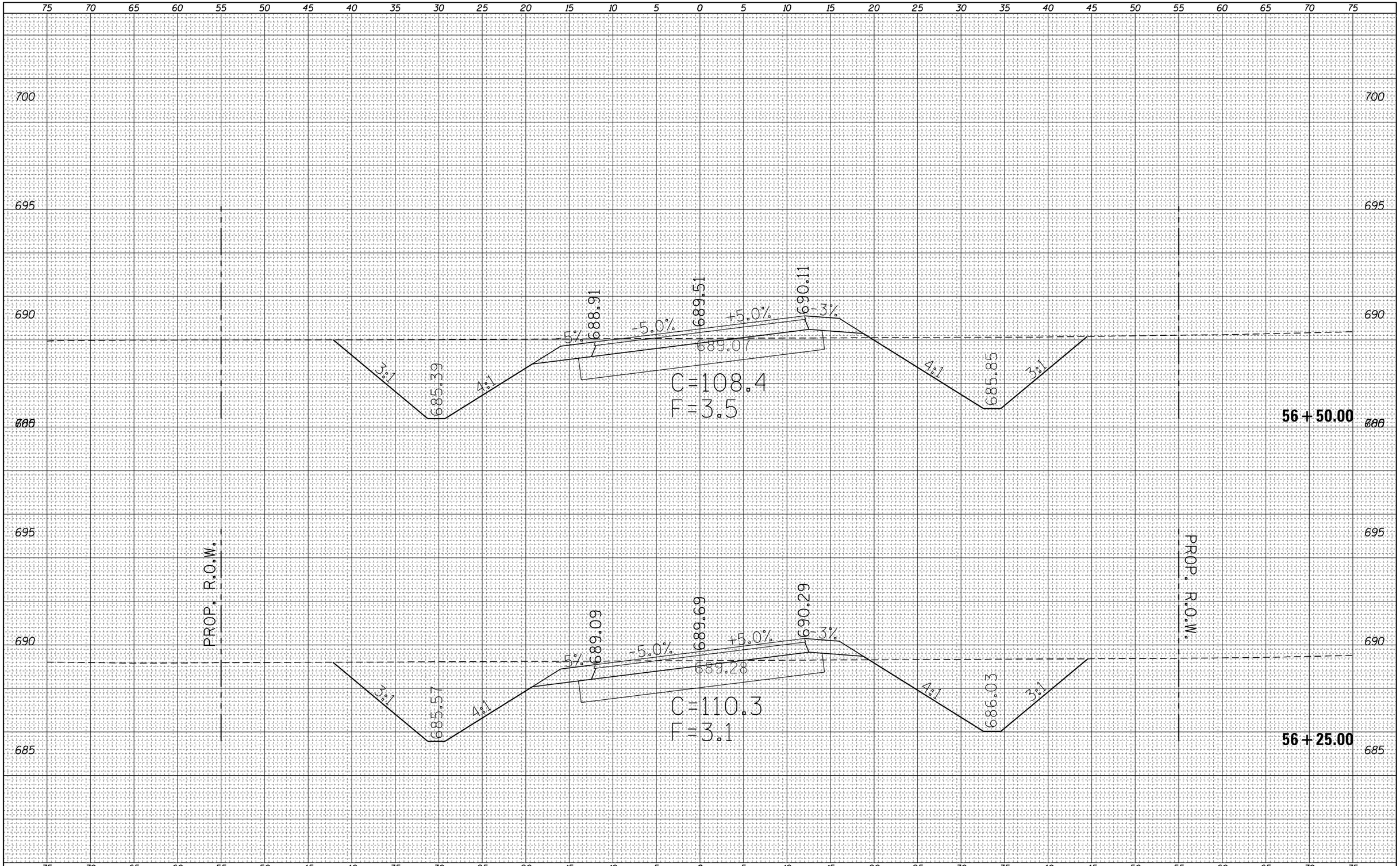

FINAL SURVEY		BY	DATE
NOTE BOOK	SURVEYED		
	PLOTTED		
	TEMPLATE		
	AREAS		
NO.	AREAS CHECKED		

ORIGINAL SURVEY		BY	DATE
NOTE BOOK	SURVEYED		
	PLOTTED		
	TEMPLATE		
	AREAS		
NO.	AREAS CHECKED		

FILE NAME = c:\pw_work\pwidot\steffenmk\d0158776\D774423-sc-sht-PRHarrisonB.dgn	USER NAME = steffenmk	DESIGNED -	REVISED -
		DRAWN -	REVISED -
	PLOT SCALE = 10.0000 ' / in.	CHECKED -	REVISED -
Default	PLOT DATE = 5/7/2014	DATE -	REVISED -

STATE OF ILLINOIS
DEPARTMENT OF TRANSPORTATION

CROSS SECTIONS
E. HARRISON B

SCALE: 5 | SHEET 10 OF 41 SHEETS | STA. 56+25.00 TO STA. 56+50.00

F.A.P. RTE.	SECTION	COUNTY	TOTAL SHEETS	SHEET NO.
91	5N	Coles	271	177

CONTRACT NO. 74423

ILLINOIS FED. AID PROJECT

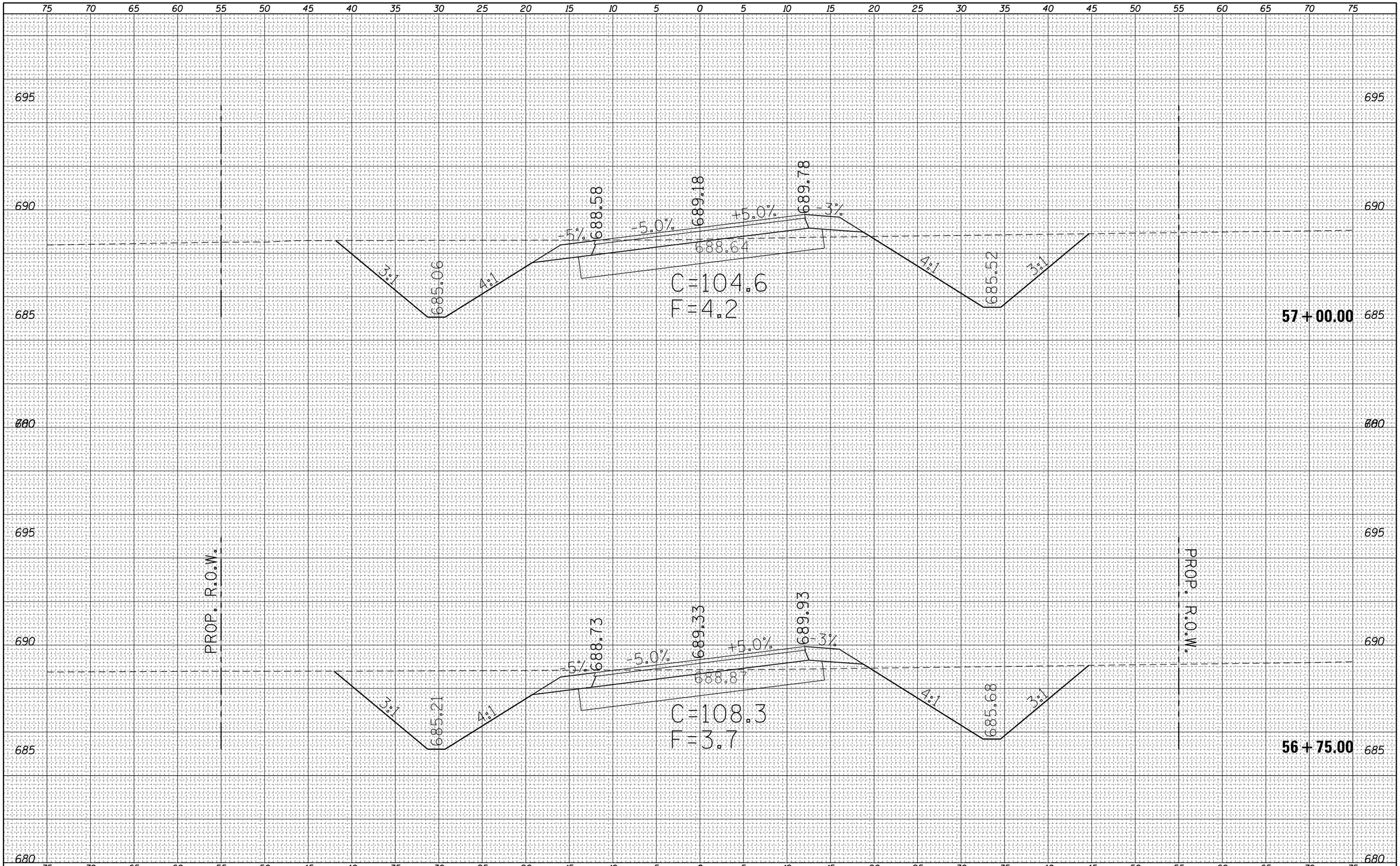

FINAL SURVEY		BY	DATE
NOTE BOOK	SURVEYED		
	PLOTTED		
	TEMPLATE		
	AREAS		
NO.	AREAS CHECKED		

ORIGINAL SURVEY		BY	DATE
NOTE BOOK	SURVEYED		
	PLOTTED		
	TEMPLATE		
	AREAS		
NO.	AREAS CHECKED		

FILE NAME =	USER NAME = steffenmk	DESIGNED -	REVISED -
c:\pw_work\pwidot\steffenmk\d0158776\D774423-sheet-sc-sht-PRHarrisonB.dgn		DRAWN -	REVISED -
	PLOT SCALE = 10.0000 ' / in.	CHECKED -	REVISED -
Default	PLOT DATE = 5/7/2014	DATE -	REVISED -

STATE OF ILLINOIS
DEPARTMENT OF TRANSPORTATION

CROSS SECTIONS
E. HARRISON B

SCALE: 5 | SHEET 11 OF 41 SHEETS | STA. 56+75.00 TO STA. 57+00.00

F.A.P. RTE.	SECTION	COUNTY	TOTAL SHEETS	SHEET NO.
91	5N	Coles	271	178

CONTRACT NO. 74423

ILLINOIS FED. AID PROJECT

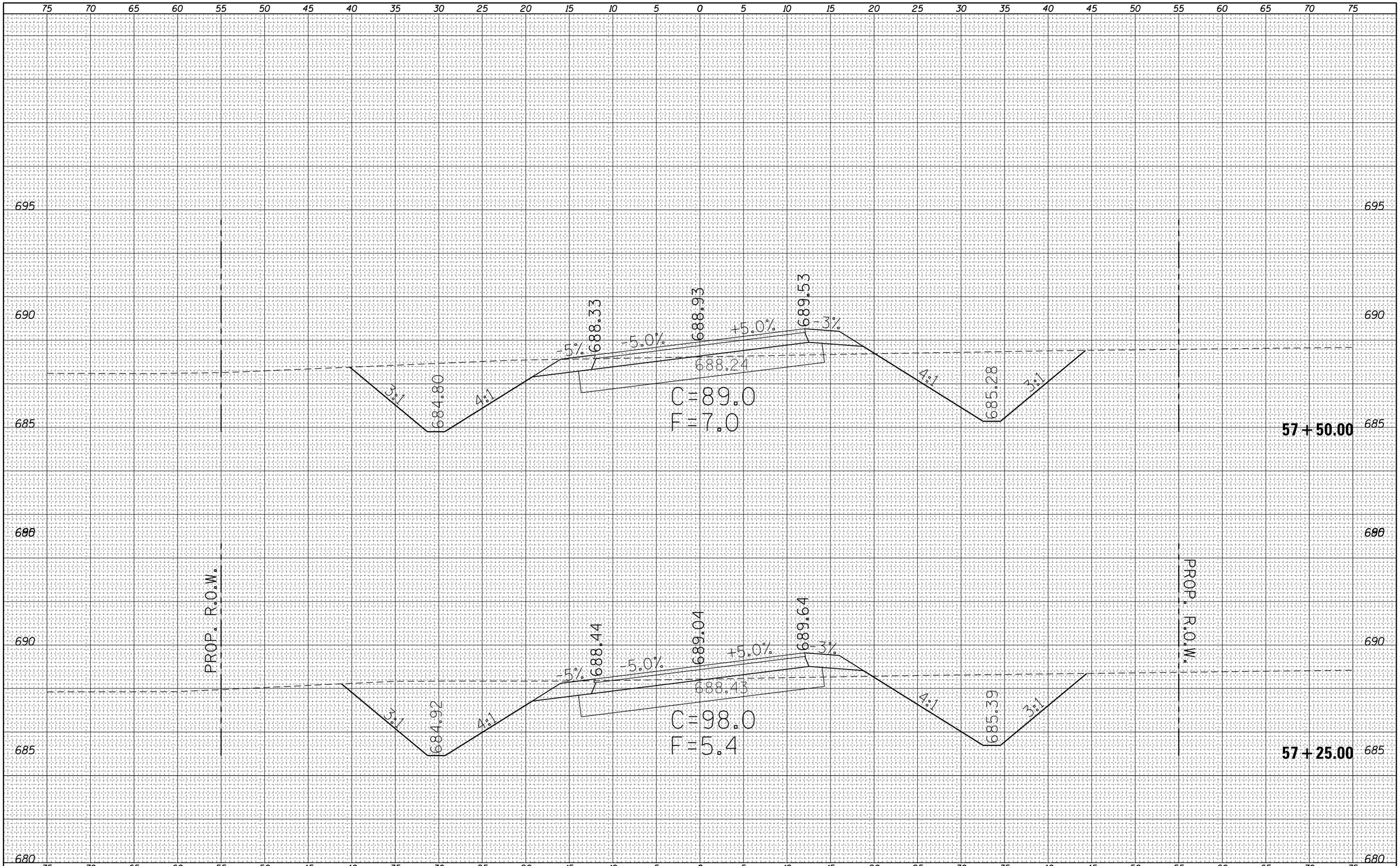

FINAL SURVEY		BY	DATE
NOTE BOOK	SURVEYED		
	PLOTTED		
	TEMPLATE		
	AREAS		
NO.	AREAS CHECKED		

ORIGINAL SURVEY		BY	DATE
NOTE BOOK	SURVEYED		
	PLOTTED		
	TEMPLATE		
	AREAS		
NO.	AREAS CHECKED		

FILE NAME = c:\pw_work\pwidot\steffenmk\d0158776\D774423-sheet-sc-sht-PRHarrisonB.dgn	USER NAME = steffenmk	DESIGNED -	REVISED -
		DRAWN -	REVISED -
	PLOT SCALE = 10.0000 ' / in.	CHECKED -	REVISED -
Default	PLOT DATE = 5/7/2014	DATE -	REVISED -

STATE OF ILLINOIS
DEPARTMENT OF TRANSPORTATION

CROSS SECTIONS
E. HARRISON B

SCALE: 5 | SHEET 12 OF 41 SHEETS | STA. 57+25.00 TO STA. 57+50.00

F.A.P. RTE.	SECTION	COUNTY	TOTAL SHEETS	SHEET NO.
91	5N	Coles	271	179

CONTRACT NO. 74423

ILLINOIS FED. AID PROJECT

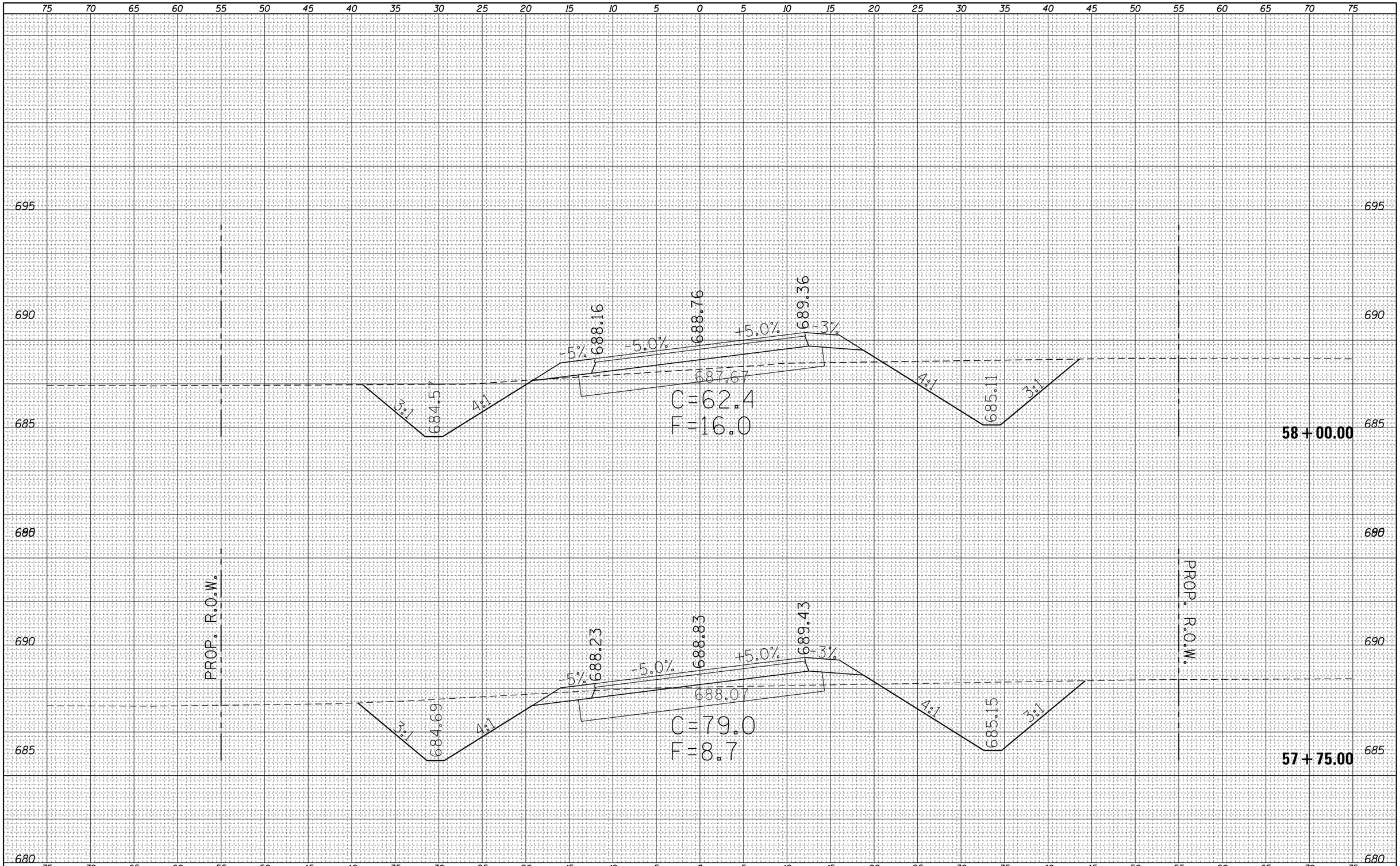

FINAL SURVEY		BY	DATE
NOTE BOOK	SURVEYED		
	PLOTTED		
	TEMPLATE		
	AREAS		
NO.	AREAS CHECKED		

ORIGINAL SURVEY		BY	DATE
NOTE BOOK	SURVEYED		
	PLOTTED		
	TEMPLATE		
	AREAS		
NO.	AREAS CHECKED		

FILE NAME =	USER NAME = steffenmk	DESIGNED -	REVISED -
c:\pw_work\pwidot\steffenmk\d0158776\D774423-sc-sht-PRHarrisonB.dgn		DRAWN -	REVISED -
	PLOT SCALE = 10.0000 ' / in.	CHECKED -	REVISED -
Default	PLOT DATE = 5/7/2014	DATE -	REVISED -

STATE OF ILLINOIS
DEPARTMENT OF TRANSPORTATION

CROSS SECTIONS
E. HARRISON B

SCALE: 5 | SHEET 13 OF 41 SHEETS | STA. 57+75.00 TO STA. 58+00.00

F.A.P. RTE.	SECTION	COUNTY	TOTAL SHEETS	SHEET NO.
91	5N	Coles	271	180

CONTRACT NO. 74423

ILLINOIS FED. AID PROJECT

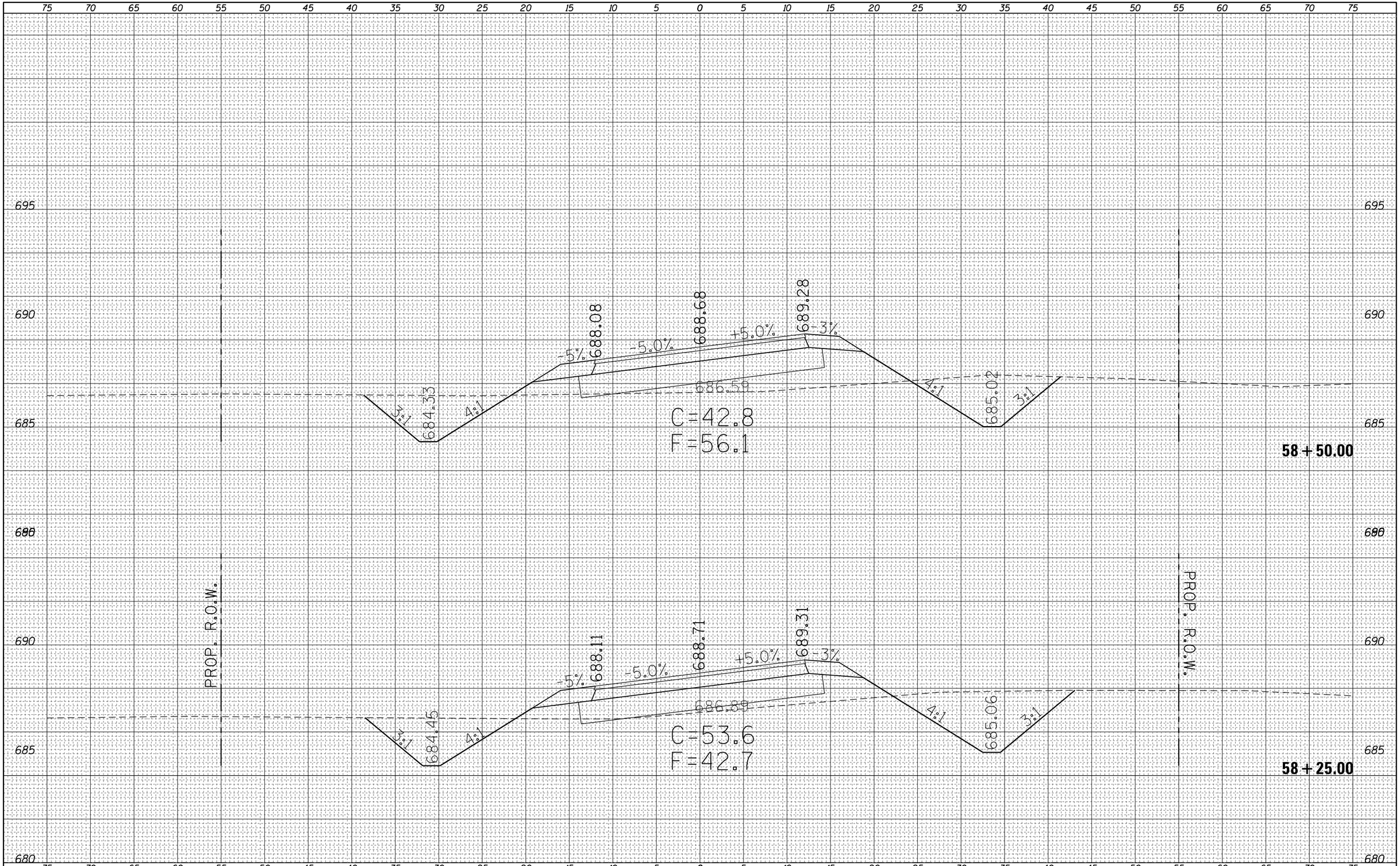

FILE NAME = c:\pw_work\pwidot\steffenmk\d0158776\D774423-sheet-sc-sht-PRHarrisonB.dgn	USER NAME = steffenmk	DESIGNED -	REVISED -	STATE OF ILLINOIS DEPARTMENT OF TRANSPORTATION	CROSS SECTIONS E. HARRISON B	F.A.P. RTE. 91	SECTION 5N	COUNTY Coles	TOTAL SHEETS 271	SHEET NO. 181
		DRAWN -	REVISED -					CONTRACT NO. 74423		
	PLOT SCALE = 10.0000 ' / in.	CHECKED -	REVISED -							
Default	PLOT DATE = 5/7/2014	DATE -	REVISED -		SCALE: 5 SHEET 14 OF 41 SHEETS STA. 58+25.00 TO STA. 58+50.00		ILLINOIS FED. AID PROJECT			

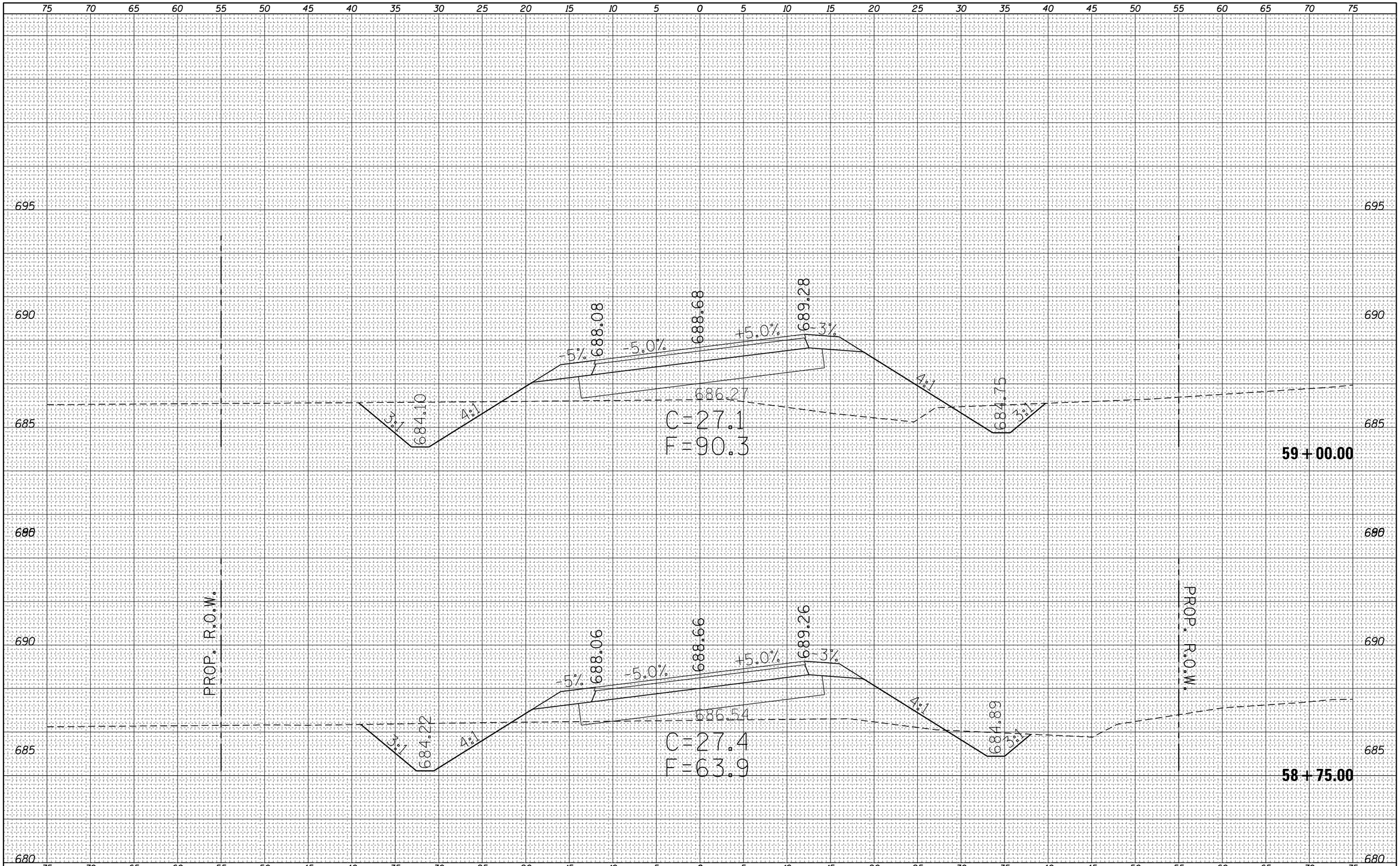

FINAL SURVEY		BY	DATE
NOTE BOOK	SURVEYED		
	PLOTTED		
	TEMPLATE		
	AREAS		
NO.	AREAS CHECKED		

ORIGINAL SURVEY		BY	DATE
NOTE BOOK	SURVEYED		
	PLOTTED		
	TEMPLATE		
	AREAS		
NO.	AREAS CHECKED		

FILE NAME = c:\pw_work\pwidot\steffenmk\d0158776\D774423-sc-sht-PRHarrisonB.dgn	USER NAME = steffenmk	DESIGNED -	REVISED -
		DRAWN -	REVISED -
	PLOT SCALE = 10.0000 ' / in.	CHECKED -	REVISED -
Default	PLOT DATE = 5/7/2014	DATE -	REVISED -

STATE OF ILLINOIS
DEPARTMENT OF TRANSPORTATION

CROSS SECTIONS
E. HARRISON B

SCALE: 5 | SHEET 15 OF 41 SHEETS | STA. 57+75.00 TO STA. 59+00.00

F.A.P. RTE.	SECTION	COUNTY	TOTAL SHEETS	SHEET NO.
91	5N	Coles	271	182

CONTRACT NO. 74423

ILLINOIS FED. AID PROJECT

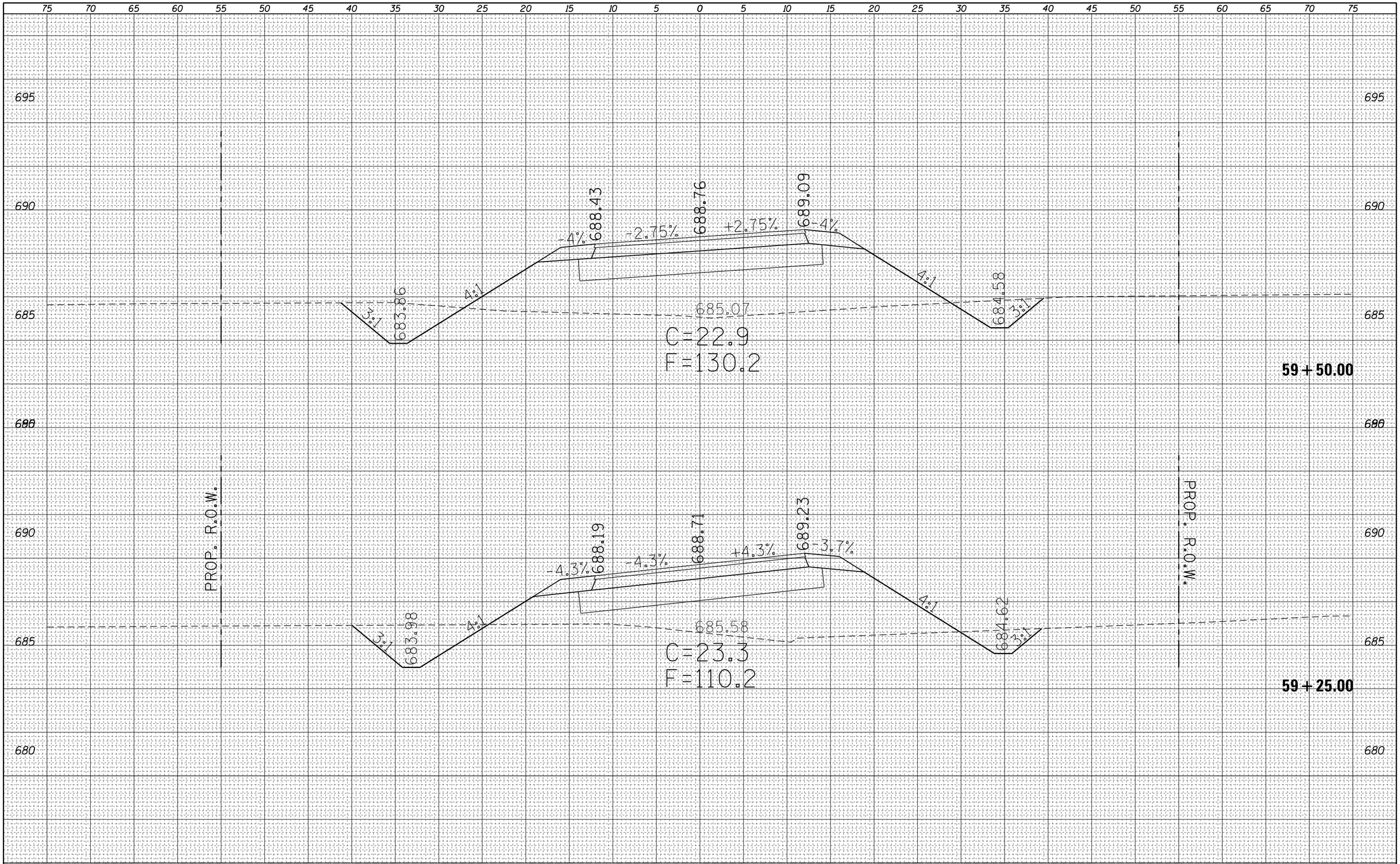

FINAL SURVEY		BY	DATE
NOTE BOOK	SURVEYED		
	PLOTTED		
	TEMPLATE		
	AREAS		
NO.	AREAS CHECKED		

ORIGINAL SURVEY		BY	DATE
NOTE BOOK	SURVEYED		
	PLOTTED		
	TEMPLATE		
	AREAS		
NO.	AREAS CHECKED		

FILE NAME =	USER NAME = steffenmk	DESIGNED -	REVISED -
c:\pw_work\pwidot\steffenmk\d0158776\D774423-sc-sht-PRHarrisonB.dgn		DRAWN -	REVISED -
	PLOT SCALE = 10.0000 ' / in.	CHECKED -	REVISED -
Default	PLOT DATE = 5/7/2014	DATE -	REVISED -

STATE OF ILLINOIS
DEPARTMENT OF TRANSPORTATION

CROSS SECTIONS
E. HARRISON B

SCALE: 5 | SHEET 16 OF 41 SHEETS | STA. 59+25.00 TO STA. 59+50.00

F.A.P. RTE.	SECTION	COUNTY	TOTAL SHEETS	SHEET NO.
91	5N	Coles	271	183

CONTRACT NO. 74423

ILLINOIS FED. AID PROJECT

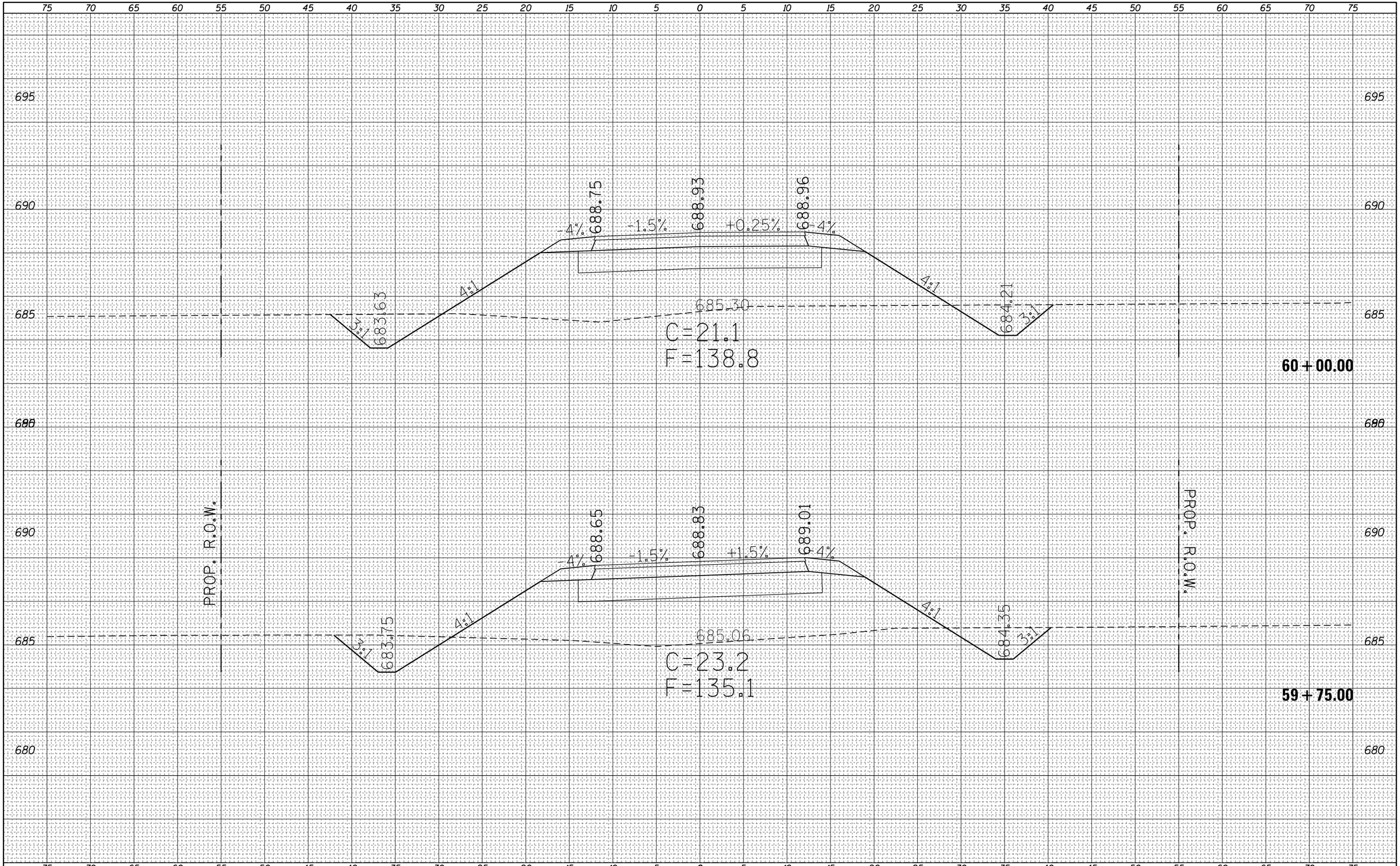

FINAL SURVEY		BY	DATE
NOTE BOOK	SURVEYED		
	PLOTTED		
	TEMPLATE		
	AREAS		
NO.	AREAS CHECKED		

ORIGINAL SURVEY		BY	DATE
NOTE BOOK	SURVEYED		
	PLOTTED		
	TEMPLATE		
	AREAS		
NO.	AREAS CHECKED		

FILE NAME =	USER NAME = steffenmk	DESIGNED -	REVISED -
c:\pw_work\pwidot\steffenmk\d0158776\D774423-sc-sht-PRHarrisonB.dgn		DRAWN -	REVISED -
	PLOT SCALE = 10.0000 ' / in.	CHECKED -	REVISED -
Default	PLOT DATE = 5/7/2014	DATE -	REVISED -

STATE OF ILLINOIS
DEPARTMENT OF TRANSPORTATION

CROSS SECTIONS
E. HARRISON B

SCALE: 5 | SHEET 17 OF 41 SHEETS | STA. 59+75.00 TO STA. 60+00.00

F.A.P. RTE.	SECTION	COUNTY	TOTAL SHEETS	SHEET NO.
91	5N	Coles	271	184

CONTRACT NO. 74423

ILLINOIS FED. AID PROJECT

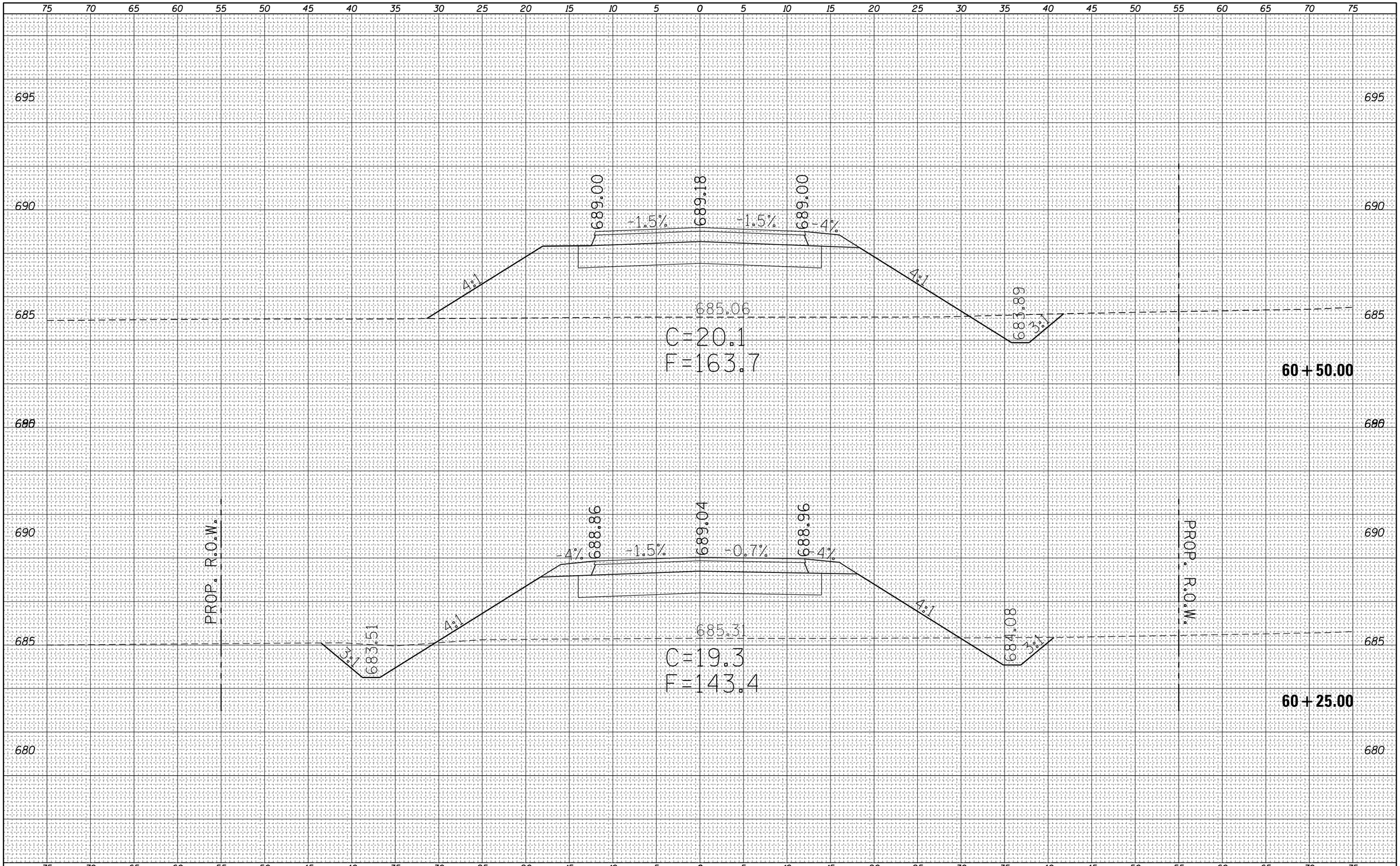

FINAL SURVEY		BY	DATE
NOTE BOOK	SURVEYED		
	PLOTTED		
	TEMPLATE		
	AREAS		
NO.	AREAS CHECKED		

ORIGINAL SURVEY		BY	DATE
NOTE BOOK	SURVEYED		
	PLOTTED		
	TEMPLATE		
	AREAS		
NO.	AREAS CHECKED		

FILE NAME =	USER NAME = steffenmk	DESIGNED -	REVISED -
c:\pw_work\pwidot\steffenmk\d0158776\D774423-sc-sht-PRHarrisonB.dgn		DRAWN -	REVISED -
	PLOT SCALE = 10.0000 ' / in.	CHECKED -	REVISED -
Default	PLOT DATE = 5/7/2014	DATE -	REVISED -

STATE OF ILLINOIS
DEPARTMENT OF TRANSPORTATION

CROSS SECTIONS
E. HARRISON B

SCALE: 5 | SHEET 18 OF 41 SHEETS | STA. 60+25.00 TO STA. 60+50.00

F.A.P. RTE.	SECTION	COUNTY	TOTAL SHEETS	SHEET NO.
91	5N	Coles	271	185

CONTRACT NO. 74423

ILLINOIS FED. AID PROJECT

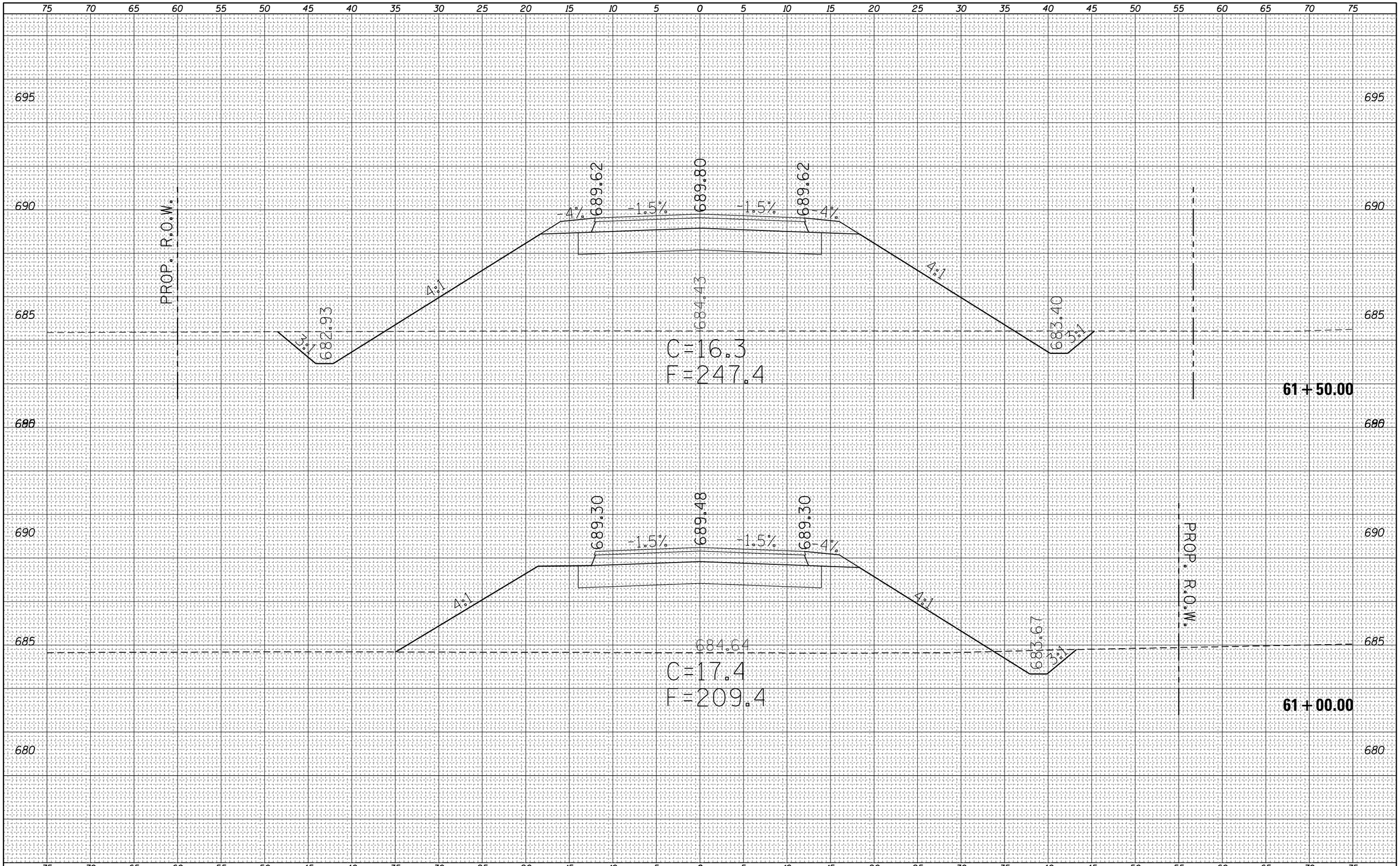

FINAL SURVEY		BY	DATE
NOTE BOOK	SURVEYED		
	PLOTTED		
	TEMPLATE		
	AREAS		
NO.	AREAS CHECKED		

ORIGINAL SURVEY		BY	DATE
NOTE BOOK	SURVEYED		
	PLOTTED		
	TEMPLATE		
	AREAS		
NO.	AREAS CHECKED		

FILE NAME =	USER NAME = steffenmk	DESIGNED -	REVISED -
c:\pw_work\pwidot\steffenmk\d0158776\D774423-sc-sht-PRHarrisonB.dgn		DRAWN -	REVISED -
	PLOT SCALE = 10.0000 ' / in.	CHECKED -	REVISED -
Default	PLOT DATE = 5/7/2014	DATE -	REVISED -

STATE OF ILLINOIS
DEPARTMENT OF TRANSPORTATION

CROSS SECTIONS
E. HARRISON B

SCALE: 5 | SHEET 19 OF 41 SHEETS | STA. 61+00.00 TO STA. 61+50.00

F.A.P. RTE.	SECTION	COUNTY	TOTAL SHEETS	SHEET NO.
91	5N	Coles	271	186

CONTRACT NO. 74423

ILLINOIS FED. AID PROJECT

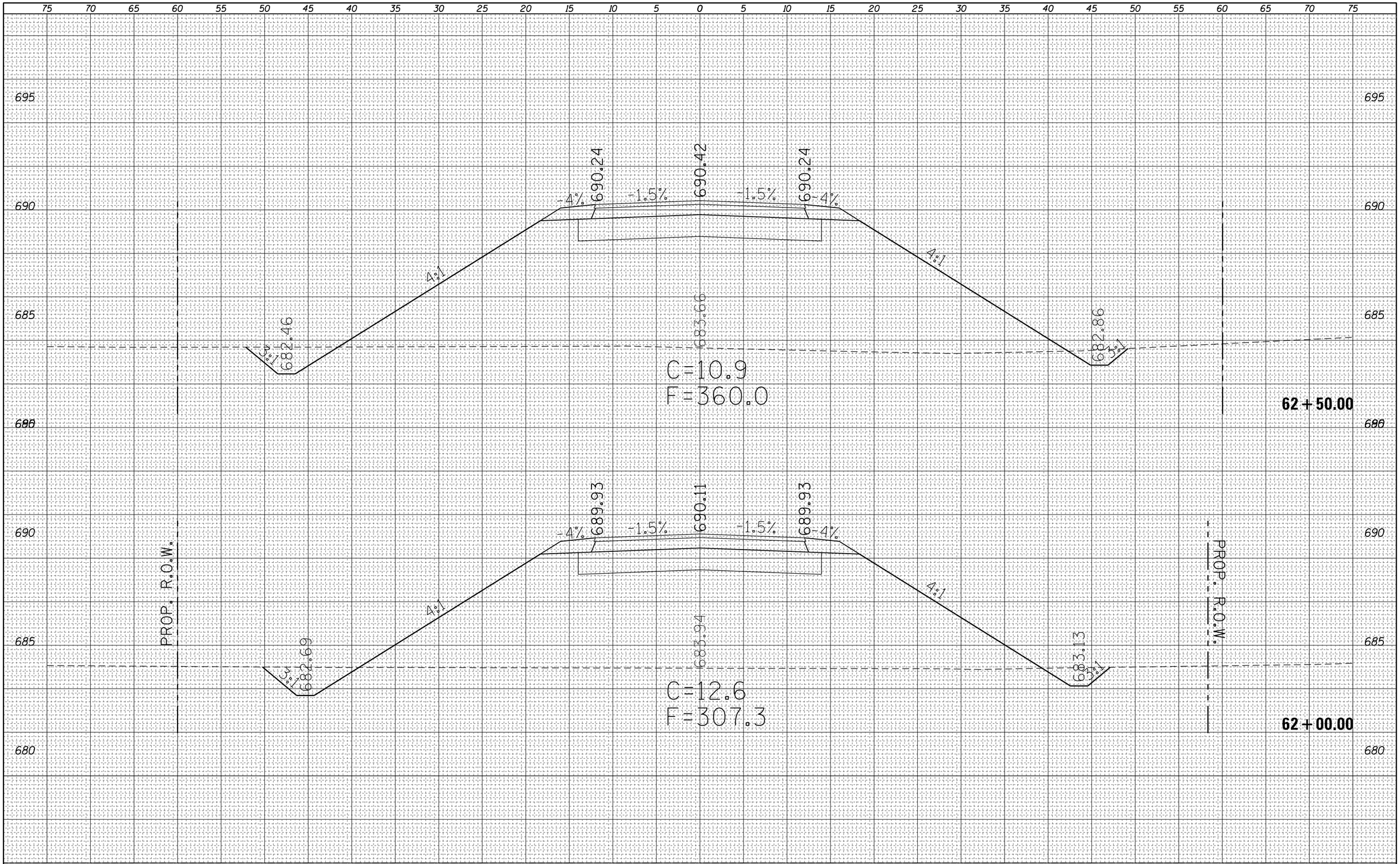

FINAL SURVEY		BY	DATE
	SURVEYED		
	PLOTTED		
	TEMPLATE		
NOTE BOOK	AREAS		
	AREAS CHECKED		
NO.			

ORIGINAL SURVEY		BY	DATE
	SURVEYED		
	PLOTTED		
	TEMPLATE		
NOTE BOOK	AREAS		
	AREAS CHECKED		
NO.			

FILE NAME =	USER NAME = steffenmk	DESIGNED -	REVISED -
c:\pw_work\pwidot\steffenmk\d0158776\D774423-sc-sht-PRHarrisonB.dgn		DRAWN -	REVISED -
	PLOT SCALE = 10.0000 ' / in.	CHECKED -	REVISED -
Default	PLOT DATE = 5/7/2014	DATE -	REVISED -

STATE OF ILLINOIS
DEPARTMENT OF TRANSPORTATION

CROSS SECTIONS
E. HARRISON B

SCALE: 5 | SHEET 20 OF 41 SHEETS | STA. 62+00.00 TO STA. 62+50.00

F.A.P. RTE.	SECTION	COUNTY	TOTAL SHEETS	SHEET NO.
91	5N	Coles	271	187

CONTRACT NO. 74423

ILLINOIS FED. AID PROJECT

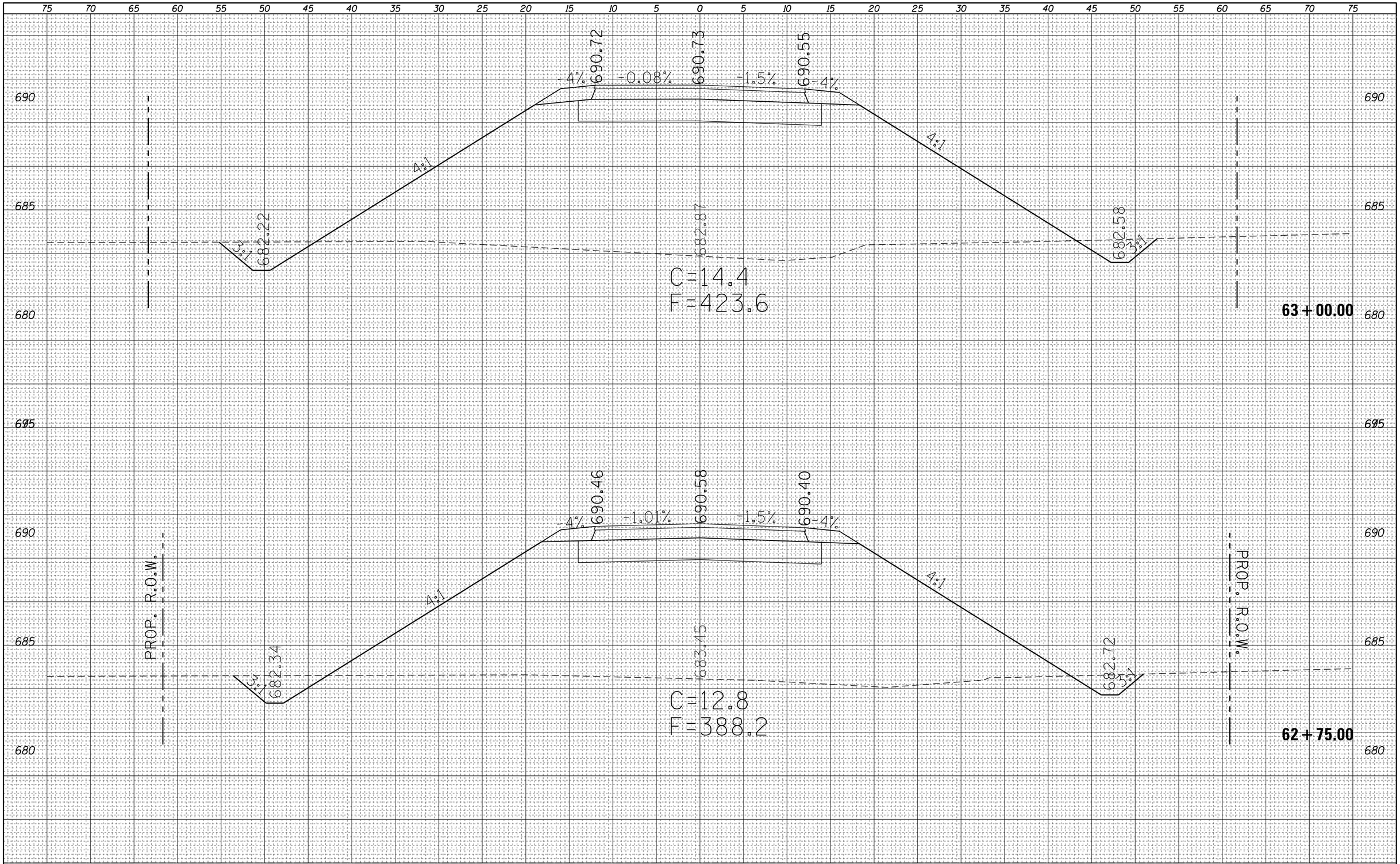

FINAL SURVEY		BY	DATE
NOTE BOOK	SURVEYED		
	PLOTTED		
	TEMPLATE		
	AREAS		
NO.	AREAS CHECKED		

ORIGINAL SURVEY		BY	DATE
NOTE BOOK	SURVEYED		
	PLOTTED		
	TEMPLATE		
	AREAS		
NO.	AREAS CHECKED		

FILE NAME =	USER NAME = steffenmk	DESIGNED -	REVISED -
c:\pw_work\pwidot\steffenmk\d0158776\D774423-sc-sht-PRHarrisonB.dgn		DRAWN -	REVISED -
	PLOT SCALE = 10.0000 ' / in.	CHECKED -	REVISED -
Default	PLOT DATE = 5/7/2014	DATE -	REVISED -

STATE OF ILLINOIS
DEPARTMENT OF TRANSPORTATION

CROSS SECTIONS
E. HARRISON B

SCALE: 5 | SHEET 21 OF 41 SHEETS | STA. 62+75.00 TO STA. 63+00.00

F.A.P. RTE.	SECTION	COUNTY	TOTAL SHEETS	SHEET NO.
91	5N	Coles	271	188

CONTRACT NO. 74423

ILLINOIS FED. AID PROJECT

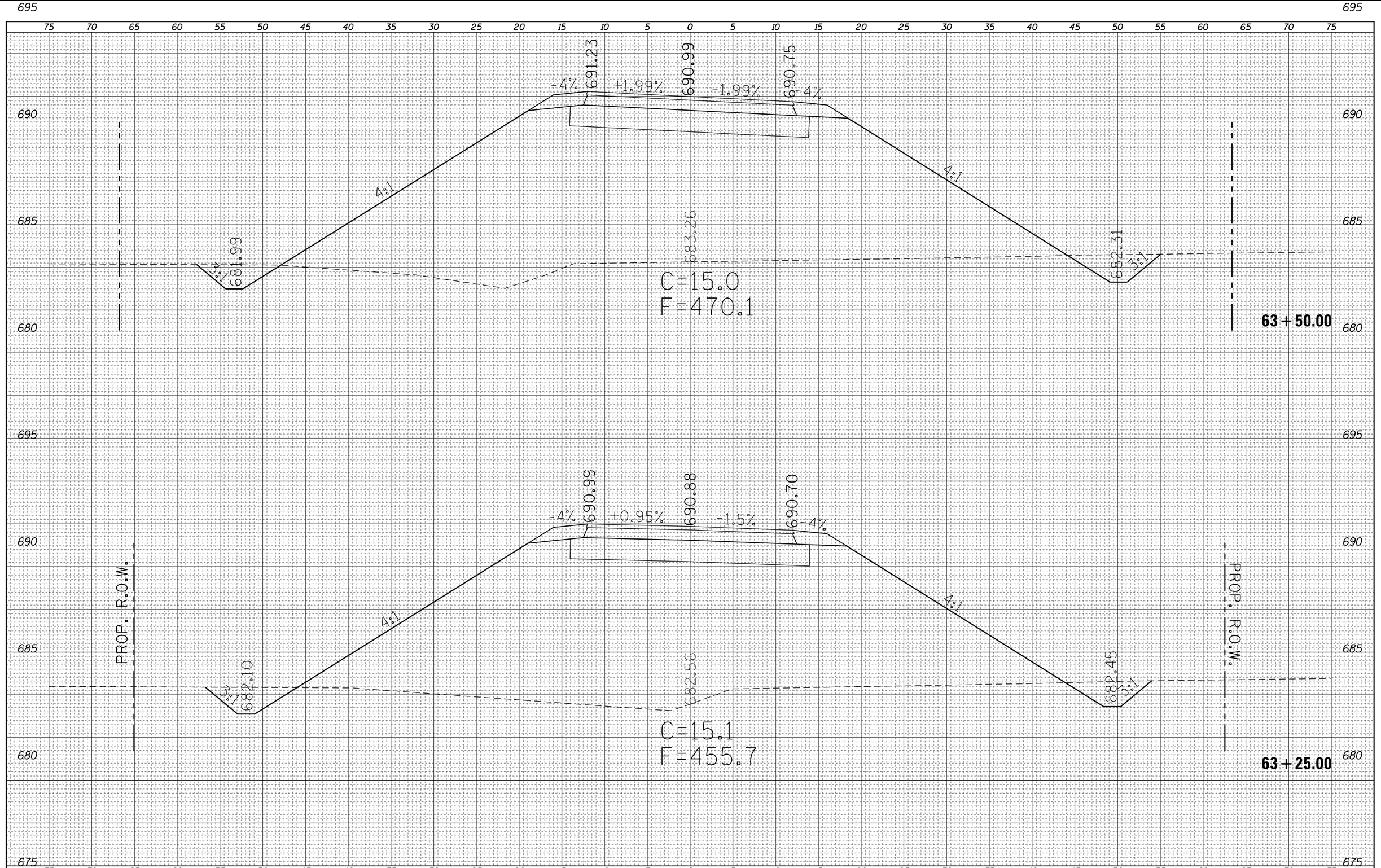

FINAL SURVEY		BY	DATE
NOTE BOOK	SURVEYED		
	PLOTTED		
	TEMPLATE		
	AREAS		
NO.	AREAS CHECKED		

ORIGINAL SURVEY		BY	DATE
NOTE BOOK	SURVEYED		
	PLOTTED		
	TEMPLATE		
	AREAS		
NO.	AREAS CHECKED		

FILE NAME = c:\pw_work\pwidot\steffenmk\d0158776\D774423-sht-PRHarrisonB.dgn	USER NAME = steffenmk	DESIGNED -	REVISED -
		DRAWN -	REVISED -
	PLOT SCALE = 10.0000 ' / in.	CHECKED -	REVISED -
Default	PLOT DATE = 5/7/2014	DATE -	REVISED -

STATE OF ILLINOIS
DEPARTMENT OF TRANSPORTATION

CROSS SECTIONS
E. HARRISON B

SCALE: 5 | SHEET 22 OF 41 SHEETS | STA. 63+25.00 TO STA. 63+50.00

F.A.P. RTE.	SECTION	COUNTY	TOTAL SHEETS	SHEET NO.
91	5N	Coles	271	189

CONTRACT NO. 74423

ILLINOIS FED. AID PROJECT

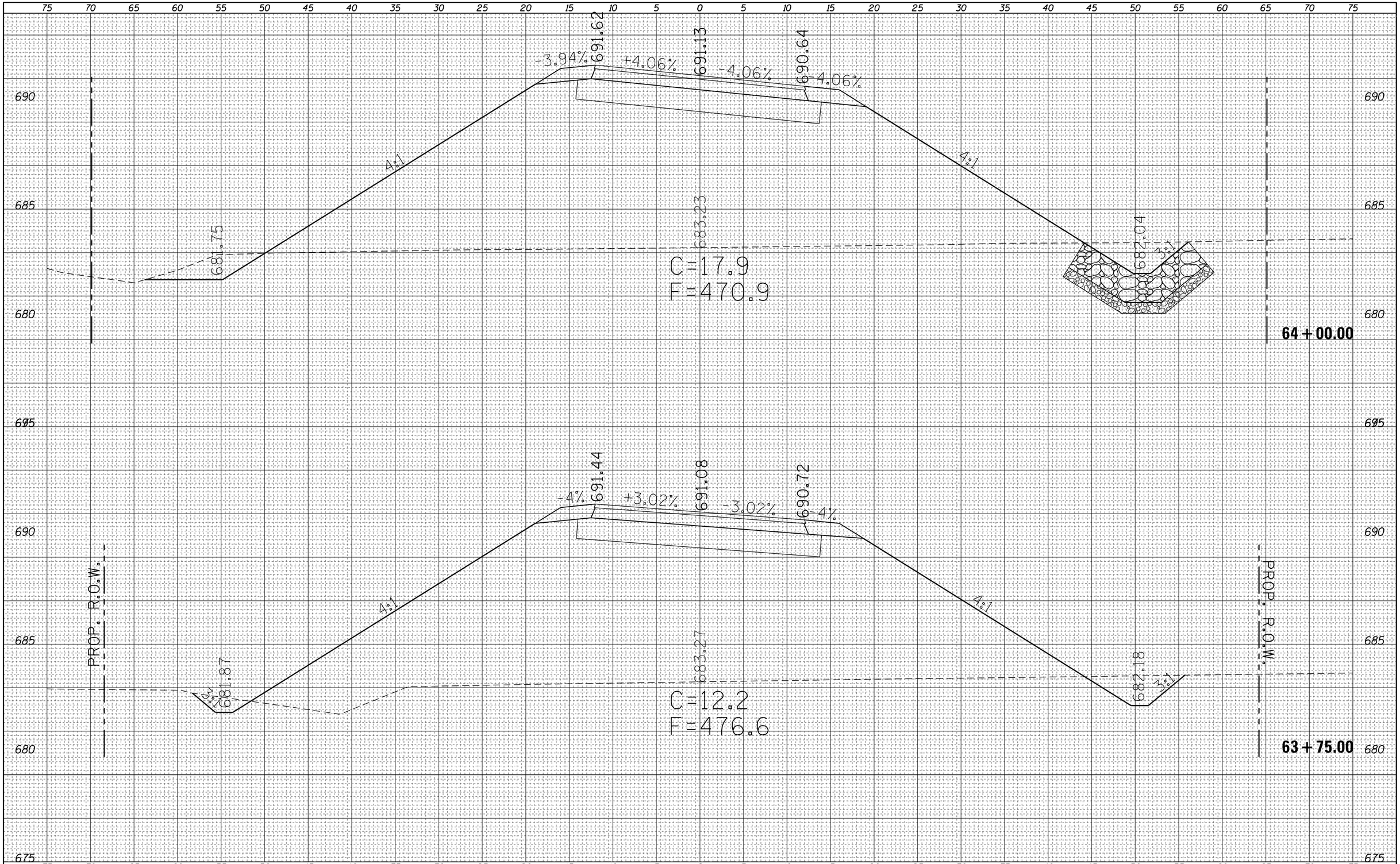

FINAL SURVEY		BY	DATE
NOTE BOOK	SURVEYED		
	PLOTTED		
	TEMPLATE		
	AREAS		
NO.	AREAS CHECKED		

ORIGINAL SURVEY		BY	DATE
NOTE BOOK	SURVEYED		
	PLOTTED		
	TEMPLATE		
	AREAS		
NO.	AREAS CHECKED		

FILE NAME = c:\pw_work\pwidot\steffenmk\d0158776\D774423-sht-PRHarrisonB.dgn	USER NAME = steffenmk	DESIGNED -	REVISED -
		DRAWN -	REVISED -
	PLOT SCALE = 10.0000 ' / in.	CHECKED -	REVISED -
Default	PLOT DATE = 5/7/2014	DATE -	REVISED -

STATE OF ILLINOIS
DEPARTMENT OF TRANSPORTATION

CROSS SECTIONS
E. HARRISON B

SCALE: 5 | SHEET 23 OF 41 SHEETS | STA. 63+75.00 TO STA. 64+00.00

F.A.P. RTE.	SECTION	COUNTY	TOTAL SHEETS	SHEET NO.
91	5N	Coles	271	190

CONTRACT NO. 74423

ILLINOIS FED. AID PROJECT

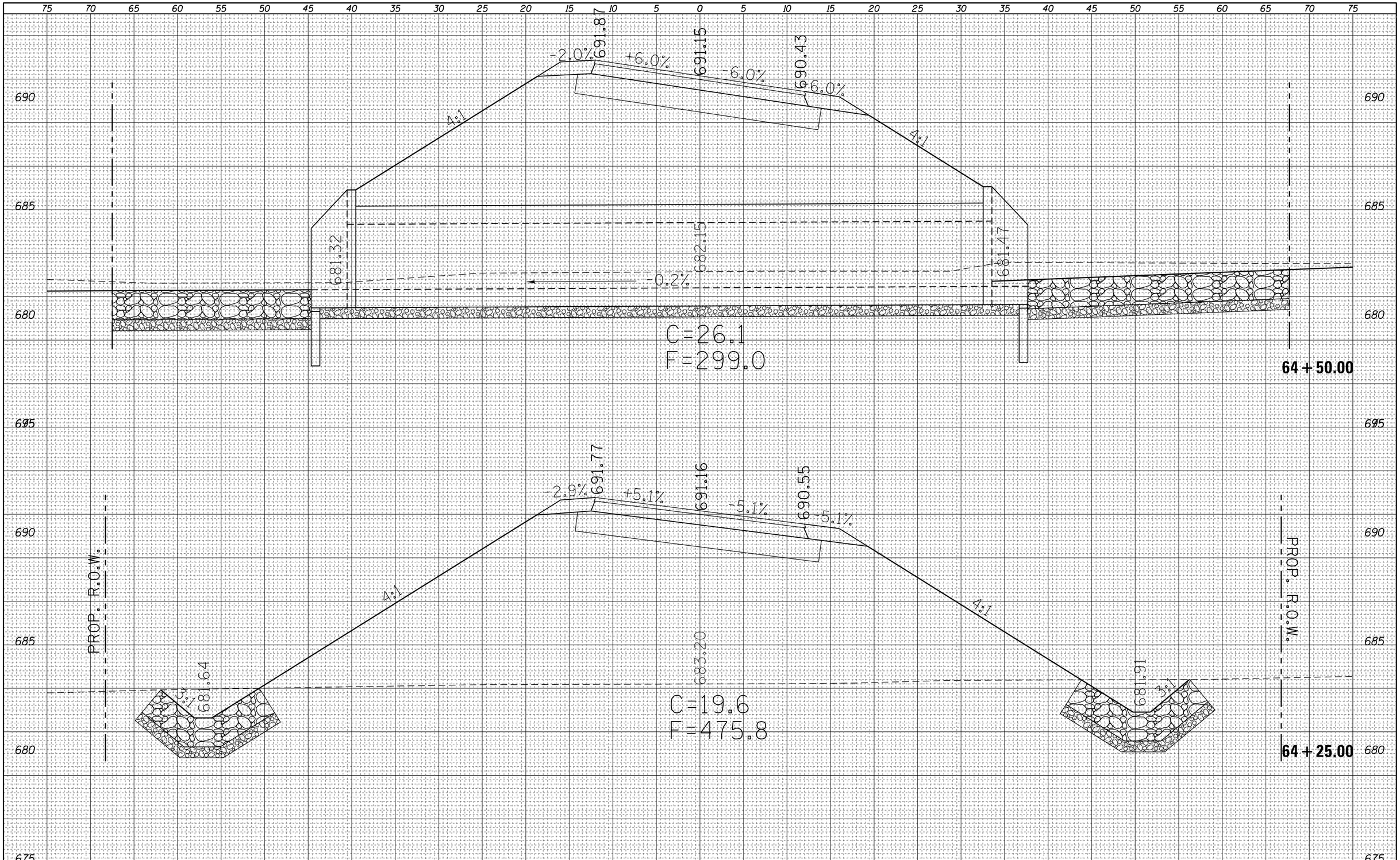

FINAL SURVEY		BY	DATE
	SURVEYED		
	PLOTTED		
	TEMPLATE		
NOTE BOOK	AREAS		
	AREAS CHECKED		
NO.			

ORIGINAL SURVEY		BY	DATE
	SURVEYED		
	PLOTTED		
	TEMPLATE		
NOTE BOOK	AREAS		
	AREAS CHECKED		
NO.			

FILE NAME = c:\pw_work\pwidot\steffenmk\d0158776\D774423-sht-PRHarrisonB.dgn	USER NAME = steffenmk	DESIGNED -	REVISED -
		DRAWN -	REVISED -
	PLOT SCALE = 10.0000 ' / in.	CHECKED -	REVISED -
Default	PLOT DATE = 5/7/2014	DATE -	REVISED -

STATE OF ILLINOIS
DEPARTMENT OF TRANSPORTATION

CROSS SECTIONS
E. HARRISON B

SCALE: 5 | SHEET 24 OF 41 SHEETS | STA. 64+25.00 TO STA. 65+50.00

F.A.P. RTE.	SECTION	COUNTY	TOTAL SHEETS	SHEET NO.
91	5N	Coles	271	191

CONTRACT NO. 74423

ILLINOIS FED. AID PROJECT

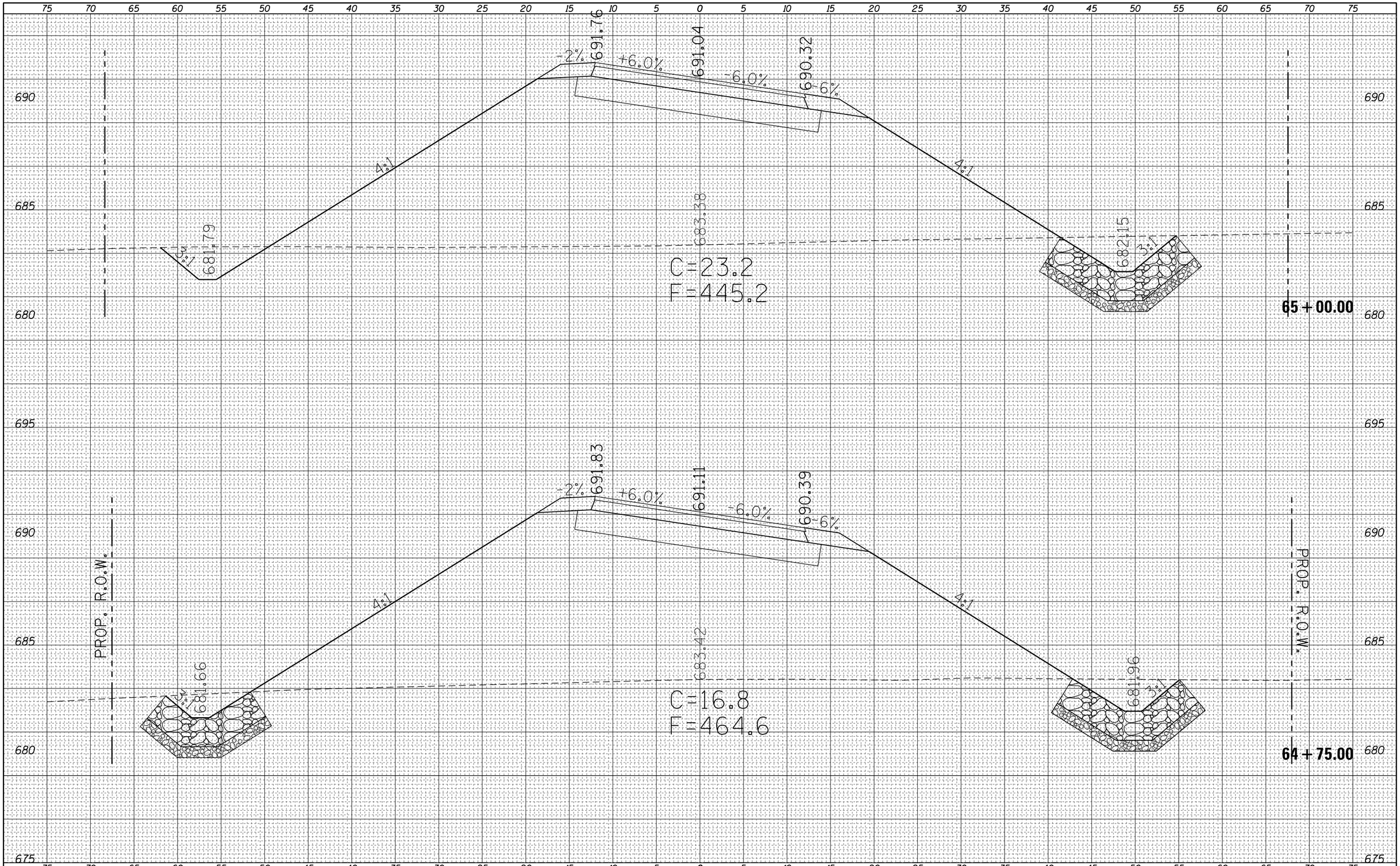

FINAL SURVEY		BY	DATE
NOTE BOOK	SURVEYED		
	PLOTTED		
	TEMPLATE		
	AREAS		
NO.	AREAS CHECKED		

ORIGINAL SURVEY		BY	DATE
NOTE BOOK	SURVEYED		
	PLOTTED		
	TEMPLATE		
	AREAS		
NO.	AREAS CHECKED		

FILE NAME =	USER NAME = steffenmk	DESIGNED -	REVISED -
c:\pw_work\pwidot\steffenmk\d0158776\D774423-sc-sht-PRHarrisonB.dgn		DRAWN -	REVISED -
	PLOT SCALE = 10.0000 ' / in.	CHECKED -	REVISED -
Default	PLOT DATE = 5/7/2014	DATE -	REVISED -

STATE OF ILLINOIS
DEPARTMENT OF TRANSPORTATION

CROSS SECTIONS
E. HARRISON B

SCALE: 5 | SHEET 25 OF 41 SHEETS | STA. 64+75.00 TO STA. 65+00.00

F.A.P. RTE.	SECTION	COUNTY	TOTAL SHEETS	SHEET NO.
91	5N	Coles	271	192

CONTRACT NO. 74423

ILLINOIS FED. AID PROJECT

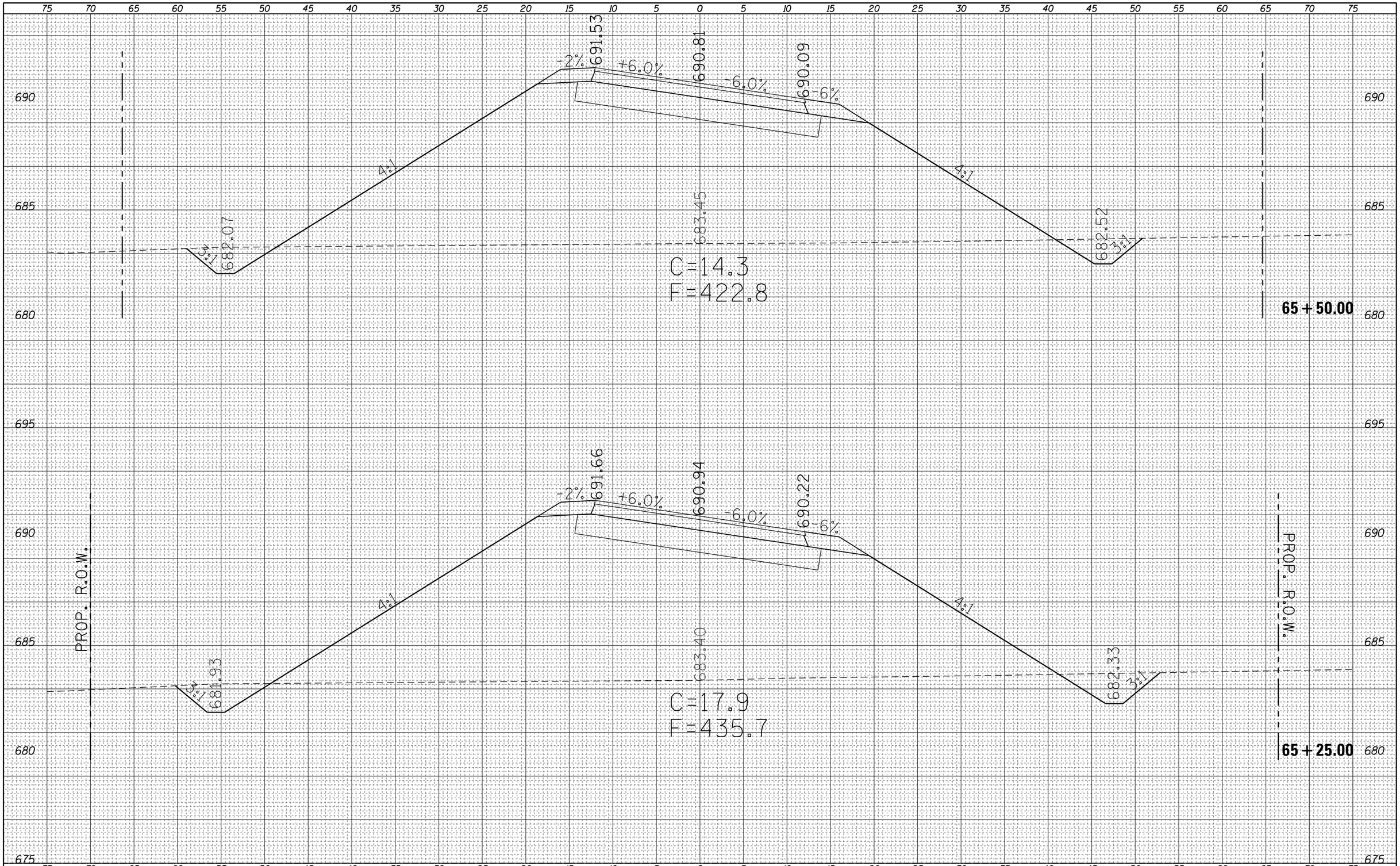

FINAL SURVEY		BY	DATE
NOTE BOOK	SURVEYED		
	PLOTTED		
	TEMPLATE		
	AREAS		
	AREAS CHECKED		
NO.			

ORIGINAL SURVEY		BY	DATE
NOTE BOOK	SURVEYED		
	PLOTTED		
	TEMPLATE		
	AREAS		
	AREAS CHECKED		
NO.			

FILE NAME =	USER NAME = steffenmk	DESIGNED -	REVISED -
c:\pw_work\pwidot\steffenmk\d0158776\D774423-sht-PRHarrisonB.dgn		DRAWN -	REVISED -
	PLOT SCALE = 10.0000 ' / in.	CHECKED -	REVISED -
Default	PLOT DATE = 5/7/2014	DATE -	REVISED -

STATE OF ILLINOIS
DEPARTMENT OF TRANSPORTATION

CROSS SECTIONS
E. HARRISON B

SCALE: 5 | SHEET 26 OF 41 SHEETS | STA. 65+25.00 TO STA. 65+50.00

F.A.P. RTE.	SECTION	COUNTY	TOTAL SHEETS	SHEET NO.
91	5N	Coles	271	193

CONTRACT NO. 74423

ILLINOIS FED. AID PROJECT

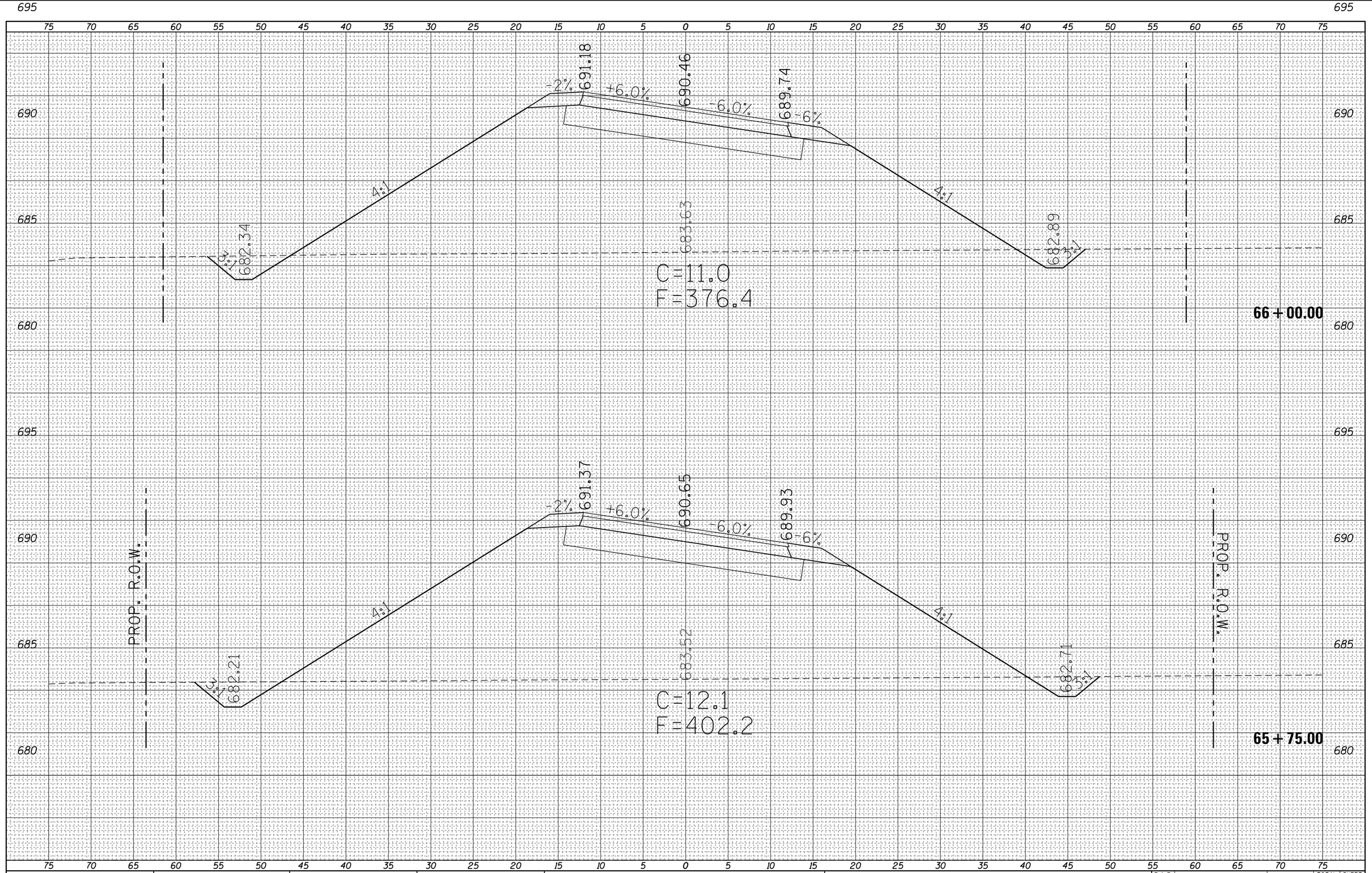

FINAL SURVEY		BY	DATE
NOTE BOOK	SURVEYED		
	PLOTTED		
	TEMPLATE		
	AREAS		
NO.	AREAS CHECKED		

ORIGINAL SURVEY		BY	DATE
NOTE BOOK	SURVEYED		
	PLOTTED		
	TEMPLATE		
	AREAS		
NO.	AREAS CHECKED		

FILE NAME = c:\pw_work\pwidot\steffenmk\d0158776\D774423-sht-PRHarrisonB.dgn	USER NAME = steffenmk	DESIGNED -	REVISED -
		DRAWN -	REVISED -
	PLOT SCALE = 10.0000 ' / in.	CHECKED -	REVISED -
Default	PLOT DATE = 5/7/2014	DATE -	REVISED -

STATE OF ILLINOIS
DEPARTMENT OF TRANSPORTATION

CROSS SECTIONS
E. HARRISON B

SCALE: 5 | SHEET 27 OF 41 SHEETS | STA. 65+75.00 TO STA. 66+00.00

F.A.P. RTE.	SECTION	COUNTY	TOTAL SHEETS	SHEET NO.
91	5N	Coles	271	194

CONTRACT NO. 74423

ILLINOIS FED. AID PROJECT

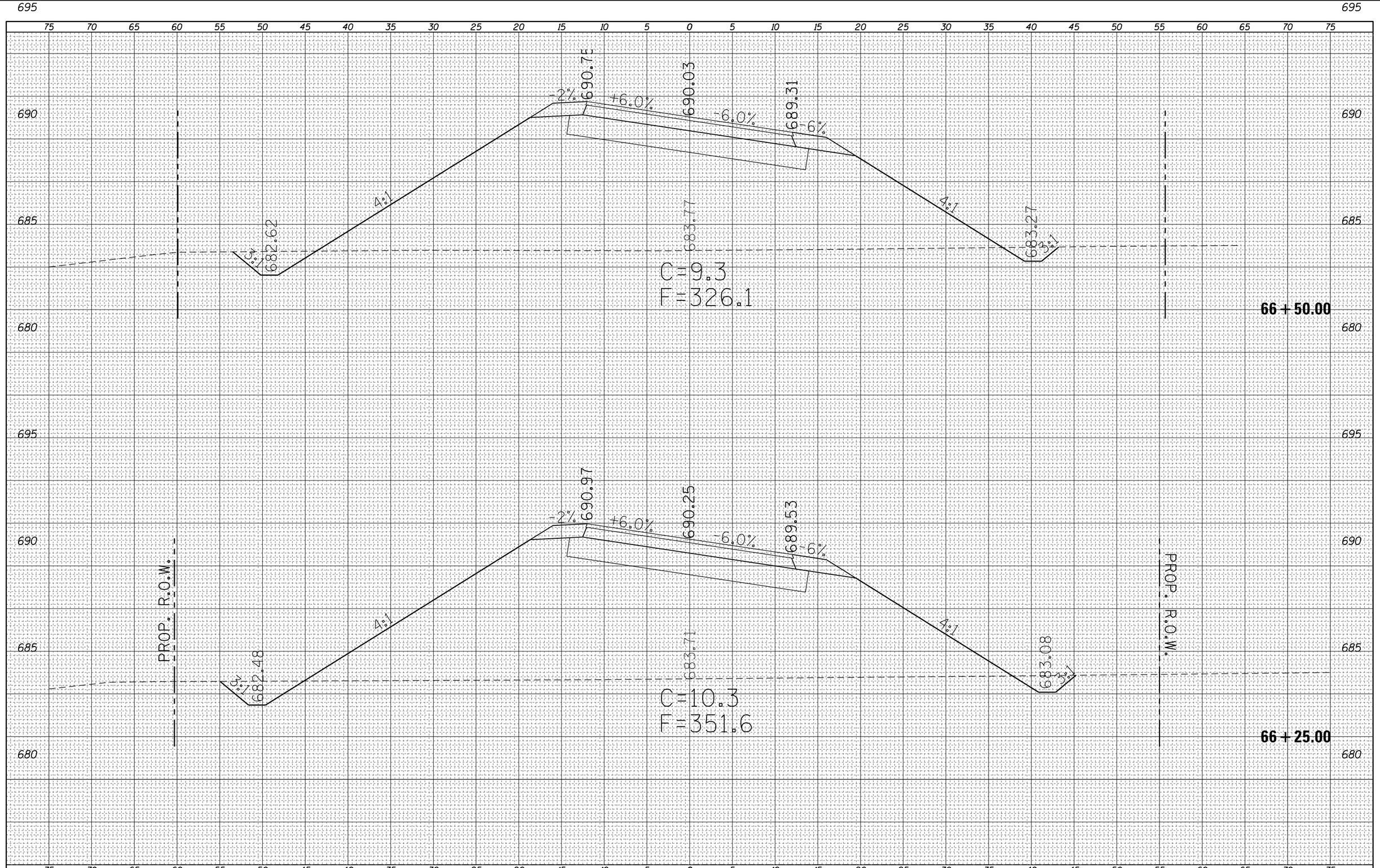

FINAL SURVEY		BY	DATE
NOTE BOOK	SURVEYED		
	PLOTTED		
	TEMPLATE		
	AREAS		
NO.	AREAS CHECKED		

ORIGINAL SURVEY		BY	DATE
NOTE BOOK	SURVEYED		
	PLOTTED		
	TEMPLATE		
	AREAS		
NO.	AREAS CHECKED		

FILE NAME =	USER NAME = steffenmk	DESIGNED -	REVISED -
c:\pw_work\pwidot\steffenmk\d0158776\D774423-sc-sht-PRHarrisonB.dgn		DRAWN -	REVISED -
	PLOT SCALE = 10.0000 ' / in.	CHECKED -	REVISED -
Default	PLOT DATE = 5/7/2014	DATE -	REVISED -

STATE OF ILLINOIS
DEPARTMENT OF TRANSPORTATION

CROSS SECTIONS
E. HARRISON B

SCALE: 5 | SHEET 28 OF 41 SHEETS | STA. 66+25.00 TO STA. 66+50.00

F.A.P. RTE.	SECTION	COUNTY	TOTAL SHEETS	SHEET NO.
91	5N	Coles	271	195

CONTRACT NO. 74423

ILLINOIS FED. AID PROJECT

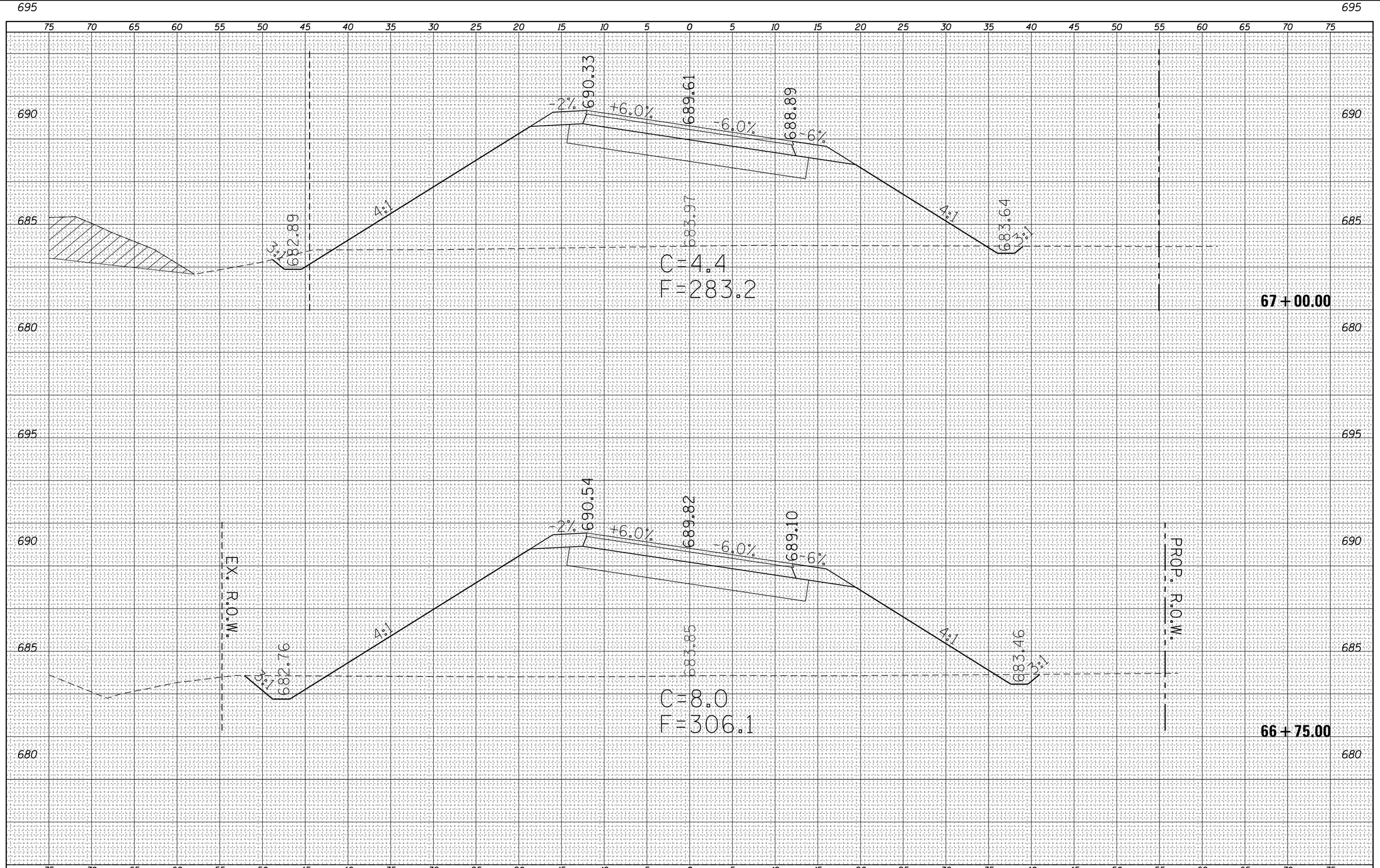

FINAL SURVEY		BY	DATE
NOTE BOOK	SURVEYED		
	PLOTTED		
	TEMPLATE		
	AREAS		
NO.	AREAS CHECKED		

ORIGINAL SURVEY		BY	DATE
NOTE BOOK	SURVEYED		
	PLOTTED		
	TEMPLATE		
	AREAS		
NO.	AREAS CHECKED		

FILE NAME =	USER NAME = steffenmk	DESIGNED -	REVISED -
c:\pw_work\pwidot\steffenmk\d0158776\D774423-sc-sht-PRHarrisonB.dgn		DRAWN -	REVISED -
	PLOT SCALE = 10.0000 ' / in.	CHECKED -	REVISED -
Default	PLOT DATE = 5/7/2014	DATE -	REVISED -

STATE OF ILLINOIS
DEPARTMENT OF TRANSPORTATION

CROSS SECTIONS
E. HARRISON B

SCALE: 5 | SHEET 29 OF 41 SHEETS | STA. 66+75.00 TO STA. 67+00.00

F.A.P. RTE.	SECTION	COUNTY	TOTAL SHEETS	SHEET NO.
91	5N	Coles	271	196

CONTRACT NO. 74423

ILLINOIS FED. AID PROJECT

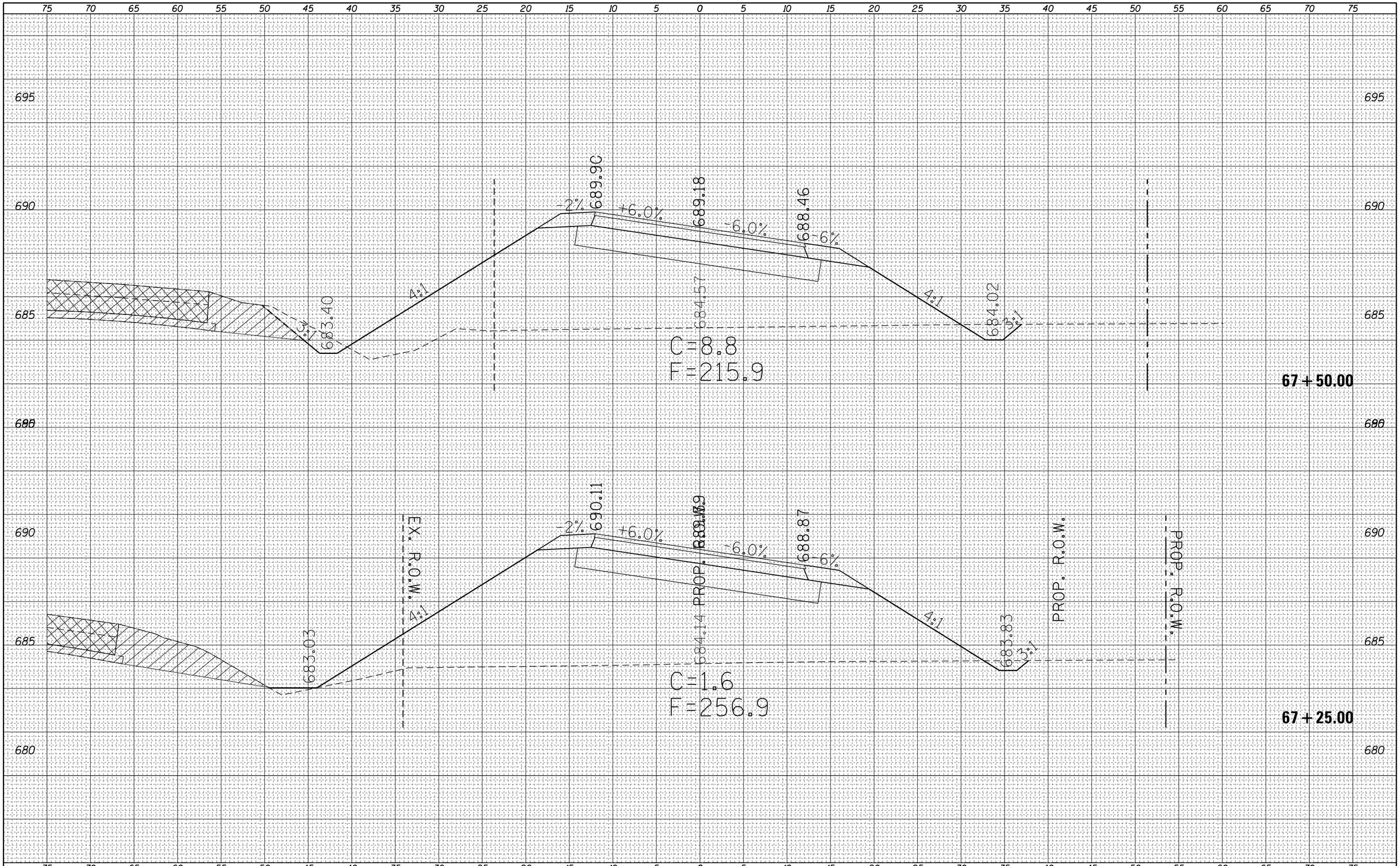

FINAL SURVEY	BY	DATE
SURVEYED		
PLOTTED		
TEMPLATE		
AREAS		
AREAS CHECKED		
NOTE BOOK NO.		

ORIGINAL SURVEY	BY	DATE
SURVEYED		
PLOTTED		
TEMPLATE		
AREAS		
AREAS CHECKED		
NOTE BOOK NO.		

FILE NAME = c:\pw_work\pwidot\steffenmk\d0158776\D774423-sc-sht-PRHarrisonB.dgn	USER NAME = steffenmk	DESIGNED -	REVISED -
		DRAWN -	REVISED -
	PLOT SCALE = 10.0000 ' / in.	CHECKED -	REVISED -
Default	PLOT DATE = 5/7/2014	DATE -	REVISED -

STATE OF ILLINOIS
DEPARTMENT OF TRANSPORTATION

CROSS SECTIONS
E. HARRISON B

SCALE: 5 | SHEET 30 OF 41 SHEETS | STA. 67+25.00 TO STA. 67+50.00

F.A.P. RTE.	SECTION	COUNTY	TOTAL SHEETS	SHEET NO.
91	5N	Coles	271	197

CONTRACT NO. 74423

ILLINOIS FED. AID PROJECT

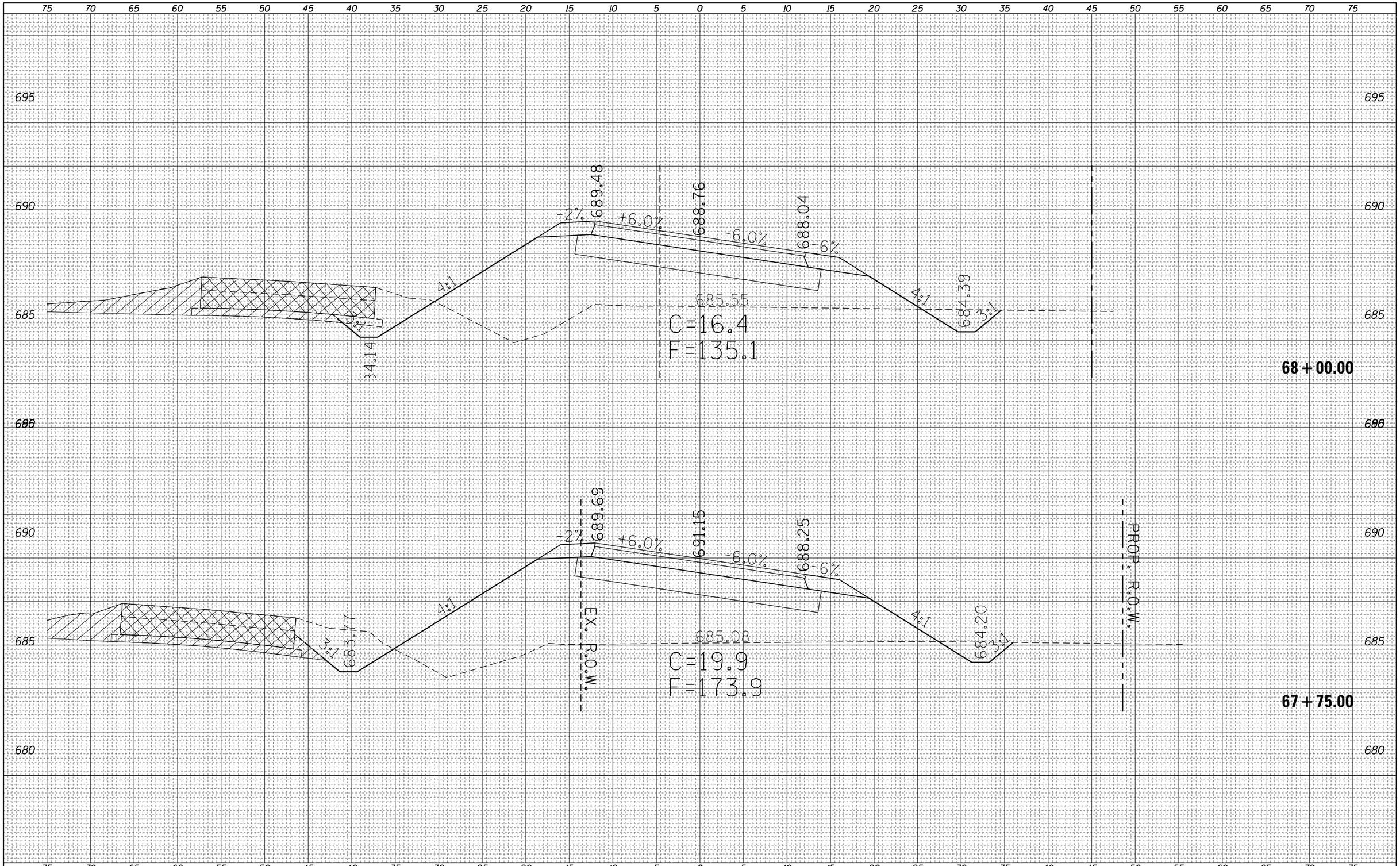

FINAL SURVEY		BY	DATE
NOTE BOOK	SURVEYED		
	PLOTTED		
	TEMPLATE		
	AREAS		
NO.	AREAS CHECKED		

ORIGINAL SURVEY		BY	DATE
NOTE BOOK	SURVEYED		
	PLOTTED		
	TEMPLATE		
	AREAS		
NO.	AREAS CHECKED		

FILE NAME =	USER NAME = steffenmk	DESIGNED -	REVISED -
c:\pw_work\pwidot\steffenmk\d0158776\D774423-sc-sht-PRHarrisonB.dgn		DRAWN -	REVISED -
	PLOT SCALE = 10.0000 ' / in.	CHECKED -	REVISED -
Default	PLOT DATE = 5/7/2014	DATE -	REVISED -

STATE OF ILLINOIS
DEPARTMENT OF TRANSPORTATION

CROSS SECTIONS
E. HARRISON B

SCALE: 5 | SHEET 31 OF 41 SHEETS | STA. 64+75.00 TO STA. 69+00.00

F.A.P. RTE.	SECTION	COUNTY	TOTAL SHEETS	SHEET NO.
91	5N	Coles	271	198

CONTRACT NO. 74423

ILLINOIS FED. AID PROJECT

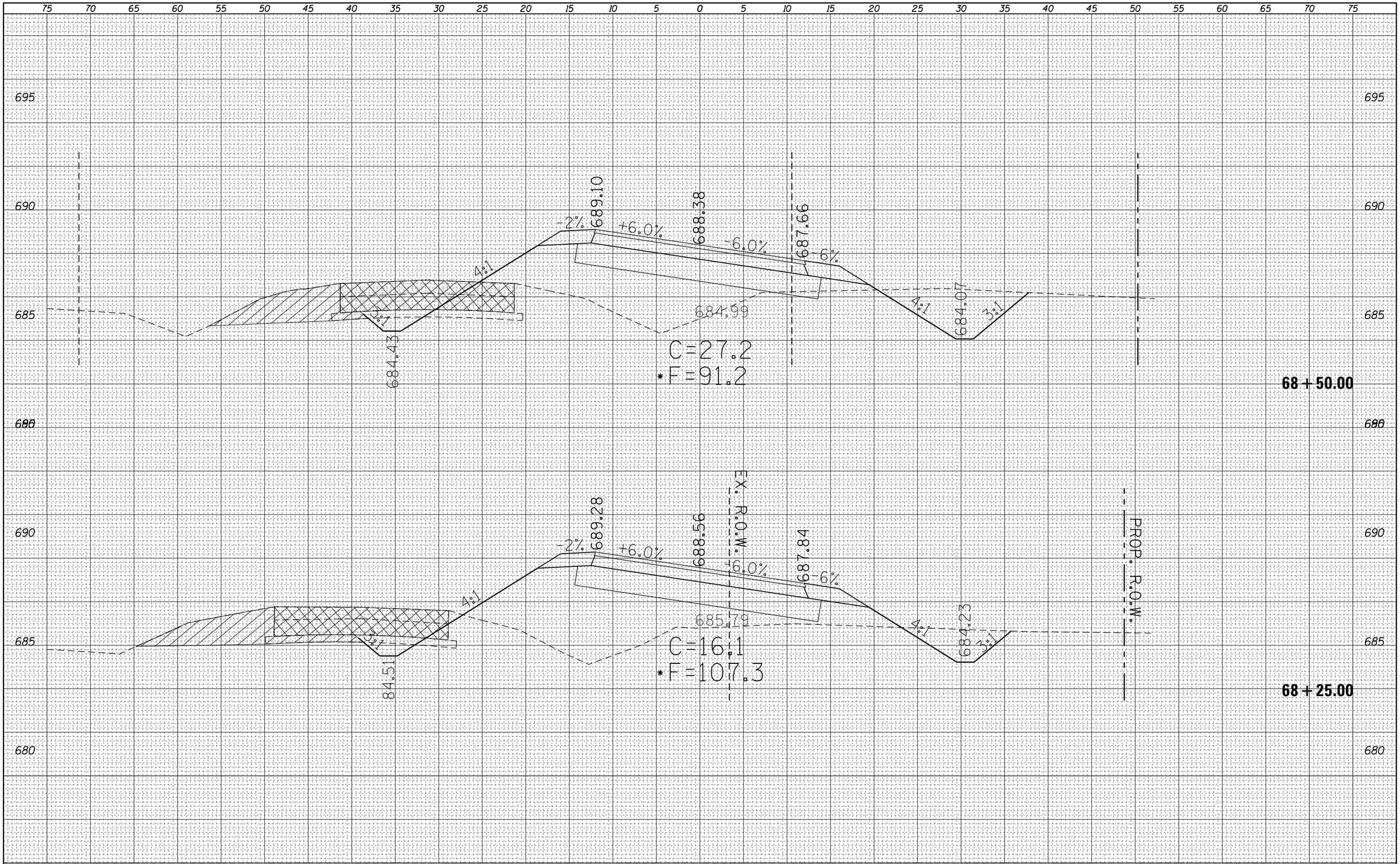

FINAL SURVEY		BY	DATE
NOTE BOOK	SURVEYED		
	PLOTTED		
	TEMPLATE		
	AREAS		
NO.	AREAS CHECKED		

ORIGINAL SURVEY		BY	DATE
NOTE BOOK	SURVEYED		
	PLOTTED		
	TEMPLATE		
	AREAS		
NO.	AREAS CHECKED		

FILE NAME =	USER NAME = steffenmk	DESIGNED -	REVISED -
c:\pw_work\pwidot\steffenmk\d0158776\D774423-sc-sht-PRHarrisonB.dgn		DRAWN -	REVISED -
	PLOT SCALE = 10.0000 ' / in.	CHECKED -	REVISED -
Default	PLOT DATE = 5/7/2014	DATE -	REVISED -

STATE OF ILLINOIS
DEPARTMENT OF TRANSPORTATION

CROSS SECTIONS
E. HARRISON B

SCALE: 5 | SHEET 32 OF 41 SHEETS | STA. 68+25.00 TO STA. 68+50.00

F.A.P. RTE.	SECTION	COUNTY	TOTAL SHEETS	SHEET NO.
91	5N	Coles	271	199

CONTRACT NO. 74423

ILLINOIS FED. AID PROJECT

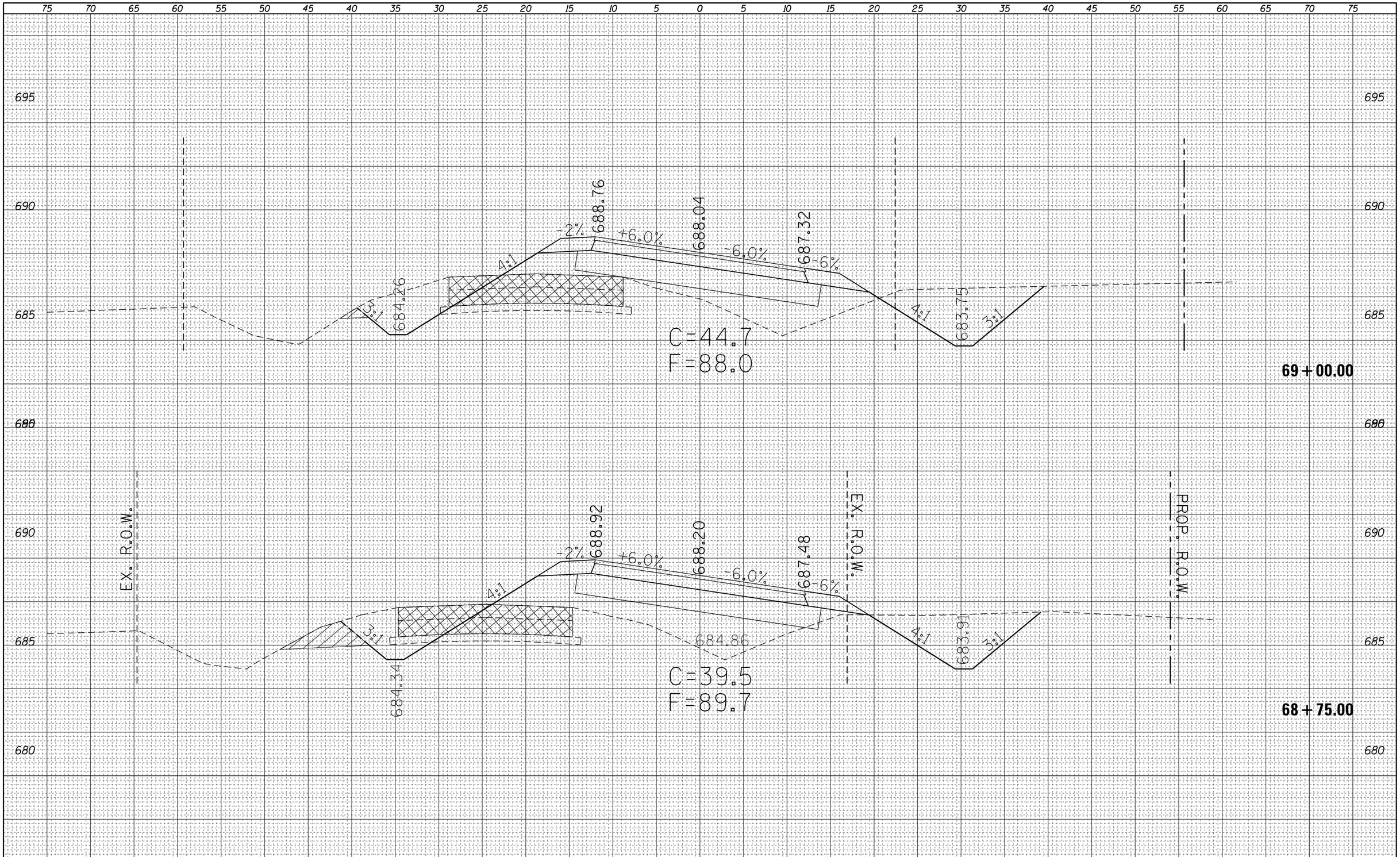

FINAL SURVEY		BY	DATE
NOTE BOOK	SURVEYED		
	PLOTTED		
	TEMPLATE		
	AREAS		
NO.	AREAS CHECKED		

ORIGINAL SURVEY		BY	DATE
NOTE BOOK	SURVEYED		
	PLOTTED		
	TEMPLATE		
	AREAS		
NO.	AREAS CHECKED		

FILE NAME =	USER NAME = steffenmk	DESIGNED -	REVISED -
c:\pw_work\pwidot\steffenmk\d0158776\D774423-sc-sht-PRHarrisonB.dgn		DRAWN -	REVISED -
	PLOT SCALE = 10.0000 ' / in.	CHECKED -	REVISED -
Default	PLOT DATE = 5/7/2014	DATE -	REVISED -

STATE OF ILLINOIS
DEPARTMENT OF TRANSPORTATION

CROSS SECTIONS
E. HARRISON B

SCALE: 5 | SHEET 33 OF 41 SHEETS | STA. 68+75.00 TO STA. 69+00.00

F.A.P. RTE.	SECTION	COUNTY	TOTAL SHEETS	SHEET NO.
91	5N	Coles	271	200

CONTRACT NO. 74423

ILLINOIS FED. AID PROJECT