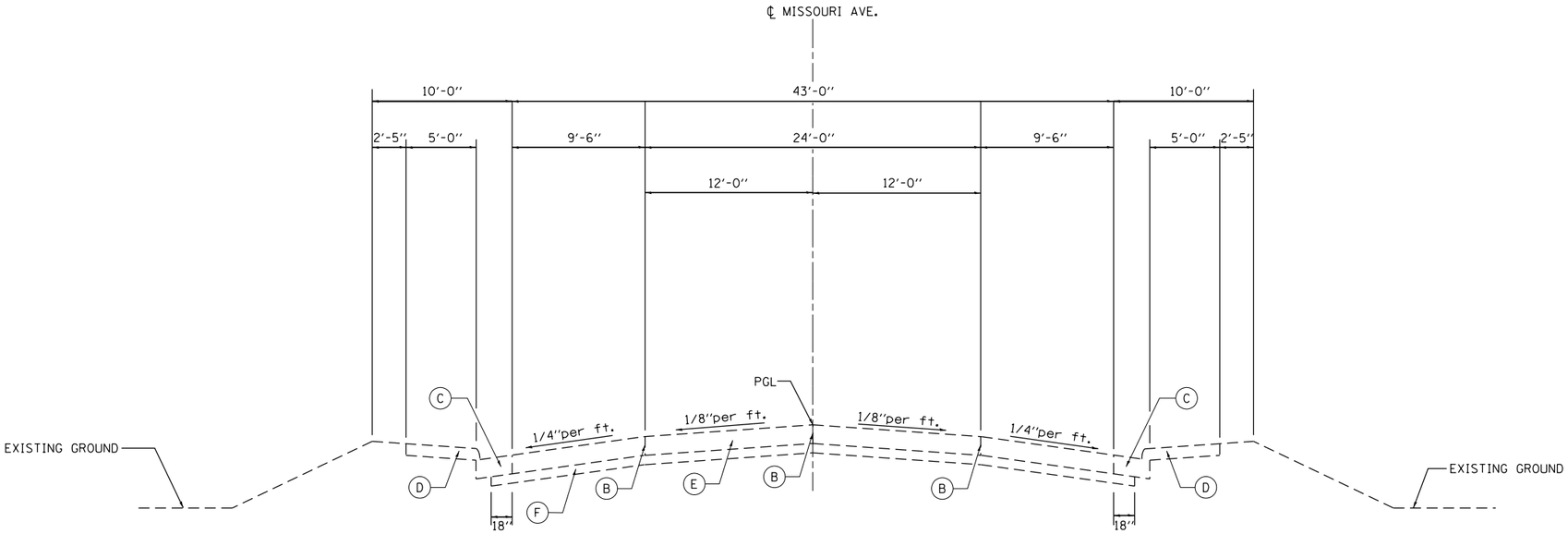

EXISTING TYPICAL SECTION

MISSOURI AVENUE (LOOKING NORTH)
FOR INFORMATION ONLY

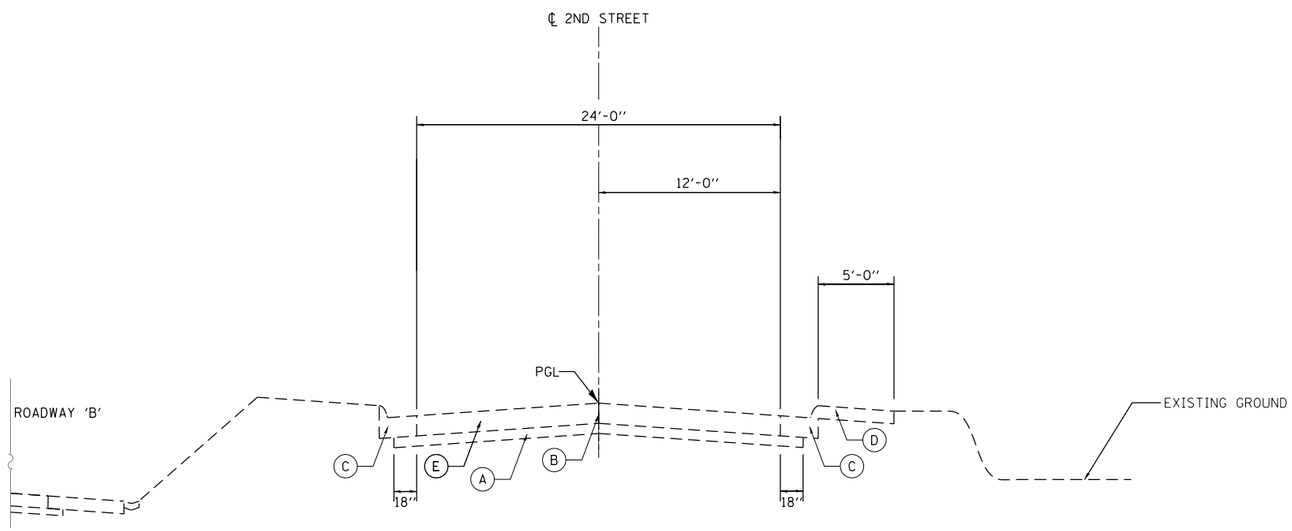

EXISTING TYPICAL SECTION

2ND STREET (LOOKING SOUTH)
FOR INFORMATION ONLY

LEGEND:

- (A) EXISTING SUB-BASE GRANULAR MATERIAL, TYPE A (4" MIN.)
- (B) EXISTING LONGITUDINAL SAWED JOINT OR LONGITUDINAL CONSTRUCTION JOINT
- (C) EXISTING COMBINATION CONCRETE CURB & GUTTER, TYPE B-6.24
- (D) EXISTING PORTLAND CEMENT CONCRETE SIDEWALK (5" THICK)
- (E) EXISTING PORTLAND CEMENT CONCRETE PAVEMENT (8" THICK)
- (F) EXISTING STABILIZED SUB-BASE 4"
- (G) EXISTING STABILIZED SHOULDERS (BITUMINOUS AGGREGATE MIXTURE)
- (H) EXISTING CONCRETE GUTTER, TYPE B
- (I) EXISTING CONCRETE GUTTER, TYPE B (SPECIAL)
- (J) EXISTING CONTINUOUSLY REINFORCED PORTLAND CEMENT CONCRETE PAVEMENT (8" THICK)
- (K) EXISTING HMA SURFACE, DEPTH UNKNOWN

FILE NAME = Q:\Ifiles\110023\Work Order 3 MO Ave Ph2\CADD Sheets\0876099-sht-typical.dgn

LIN ENGINEERING, LTD. Consulting Engineers Springfield, Illinois	USER NAME = seb	DESIGNED - RP	REVISED -	STATE OF ILLINOIS DEPARTMENT OF TRANSPORTATION	TYPICAL SECTIONS MISSOURI AVENUE DEEP WELL FACILITY	F.A.I. RTE.	SECTION	COUNTY	TOTAL SHEETS / SHEET NO.
		DRAWN - RP	REVISED -			64	82-4T-1	ST. CLAIR	185 / 14
	PLOT SCALE = 2.0000 ' / in.	CHECKED - SGL	REVISED -					CONTRACT NO. 76G99	
	PLOT DATE = 8/23/2014	DATE - 7/1/2014	REVISED -		SCALE: N.T.S. / SHEET 1 OF 2 SHEETS / STA. N/A / TO STA. N/A		ILLINOIS FED. AID PROJECT		