F.A.I. RTE.	SECTION	COUNTY	TOTAL SHEETS	SHEET NO.
80/94	2626.2-R-2	COOK/LAKE	1207	430
STA.		TO STA.		
FED. ROAD DIST. NO.		ILLINOIS	FED. AID PROJECT	

CONTRACT NO. 62114 INDOT DES. NO. 0100987

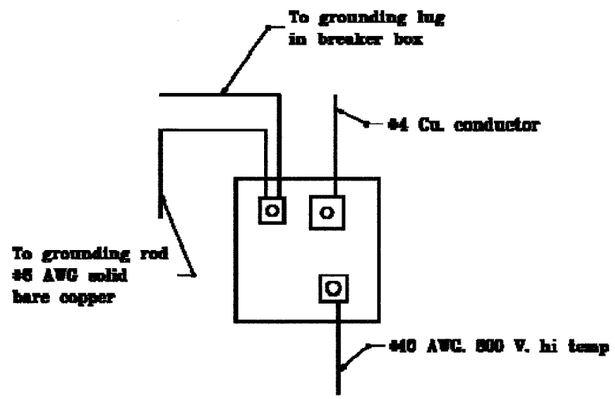

NEUTRAL GROUND LUG DETAIL B

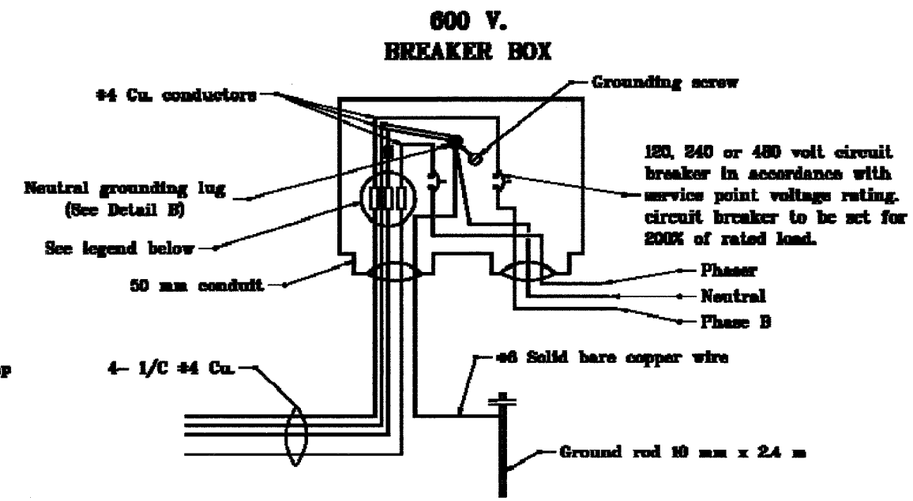

BREAKER BOX WIRING DETAIL

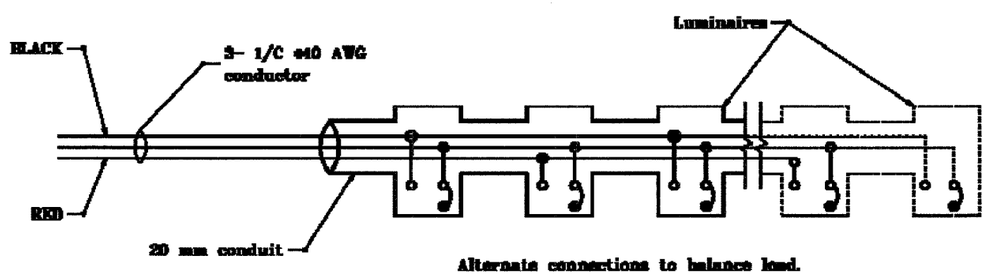

Alternate connections to balance load.
(For connection to 120 V. or 240 V. phase to neutral)

LUMINAIRE WIRING DETAIL

LEGEND

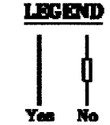

GENERAL NOTES

1. Breaker panel wiring to be used with bridge bracket sign illumination, or when lighting overhead sign is not a roadway lighting system.
2. Oxidation inhibitor shall be liberally applied to all surfaces that mate with a dissimilar material.

All dimensions are in mm unless otherwise specified.

INDIANA DEPARTMENT OF TRANSPORTATION

SIGN WIRING DETAILS

SEPTEMBER 2001

STANDARD DRAWING NO. 802-SNWR-02

DESIGN STANDARDS ENGINEER

/s/ Anthony L. Brzezinski 9-01-01
DESIGN STANDARDS ENGINEER DATE

/s/ Firas Sawaf 9-01-01
CHIEF HIGHWAY ENGINEER DATE