F.A.I. RTE.	SECTION	COUNTY	TOTAL SHEETS	SHEET NO.
80/94	2626.2-R-2	COOK	1207	544
STA.		TO STA.		
FED. ROAD DIST. NO.		ILLINOIS	FED. AID PROJECT	

CONTRACT NO. 62114

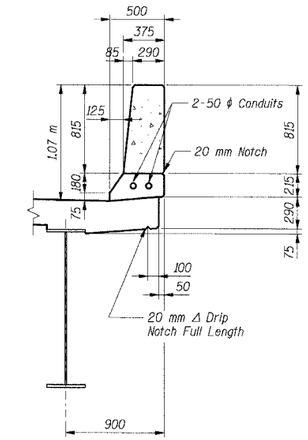

SECTION E-E
(Showing Geometry)

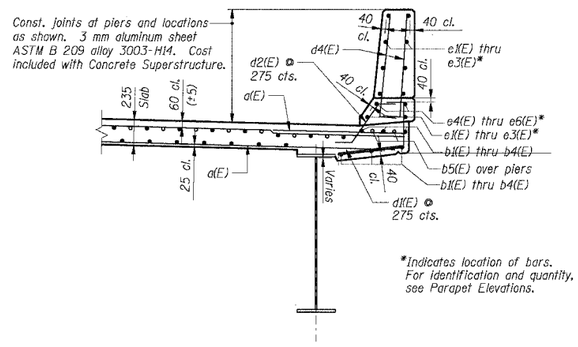

SECTION E-E
(Showing Reinforcement)

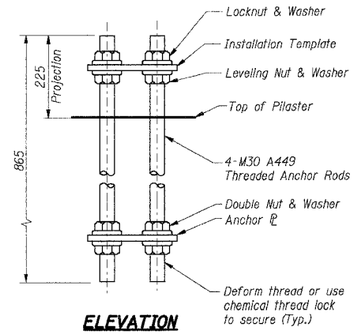

ELEVATION

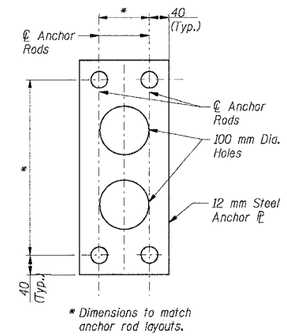

PLAN

Note: Entire anchor rod assembly including anchor plate shall be hot dip galvanized.

NOISE ABATEMENT WALL ANCHOR ROD ASSEMBLY

21 THIS CONTRACT
21 BY OTHERS IN FUTURE CONTRACT

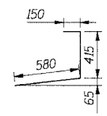

Bar d1(E)

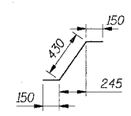

Bar d2(E)

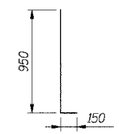

Bar d4(E)

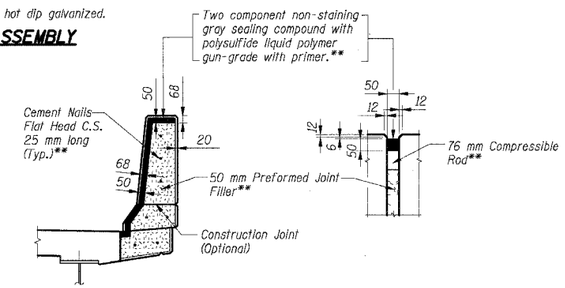

PARAPET EXPANSION JOINT DETAIL AT RETAINING WALL**

** Cost included with Concrete Superstructure

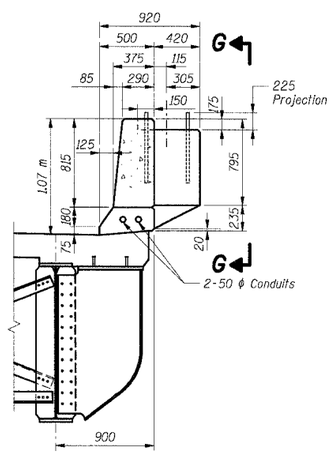

SECTION F-F
(Showing Geometry)

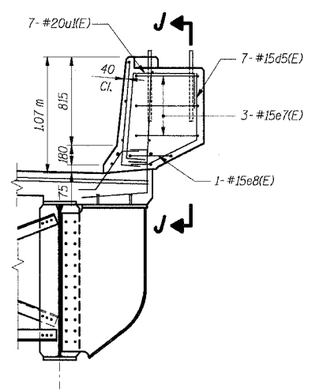

SECTION F-F
(Showing Reinforcement)

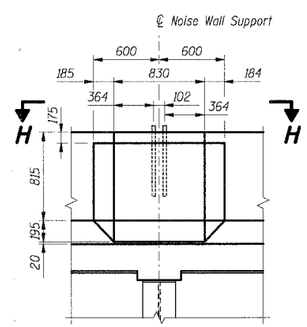

SECTION G-G

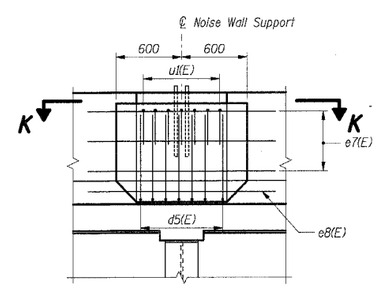

SECTION J-J

THIS SHEET FOR INFORMATION ONLY

ONLY NORTH EXTERIOR PARAPET CONSTRUCTED IN THIS CONTRACT

Notes:
1. All dimensions are in millimeters (mm) except as noted.
2. Reinforcement bars designated (E) shall be epoxy coated.
3. Bars indicated thus 74x10-#15 etc. indicates 74 lines of bars with 10 lengths per line
4. For Parapet Elevation, see Sht. BS-24.
5. For Reinforcement Bar List & Bill of Material, see Sht. BS-24.
6. Work this Sheet with Shts. BS-15 thru BS-23.
7. I.F. Denotes Inside Face
   O.F. Denotes Outside Face.
8. All edges shall have a 20 mm chamfer unless noted otherwise.

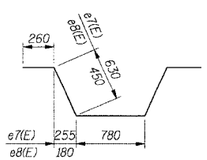

Bars e7(E) & e8(E)

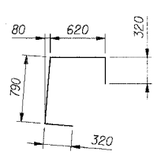

Bar u1(E)

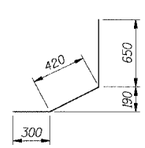

Bar d5(E)

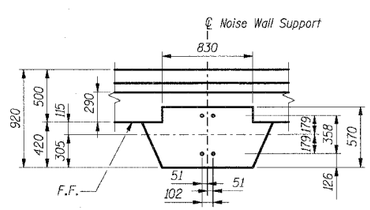

SECTION H-H

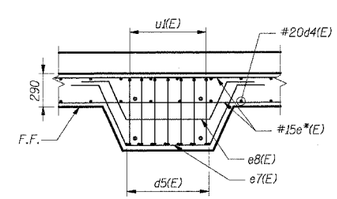

SECTION K-K

*Indicates location of bars. For identification and quantity, see Parapet Elevations

SHT. BS-26 OF 60

REVISIONS	
NAME	DATE

ILLINOIS DEPARTMENT OF TRANSPORTATION
F.A.I. ROUTE 80/94 (KINGERY EXPRESSWAY)
EB & WB OUTSIDE LANES (MAINLINE) CONSTRUCTION
I-80/94 OVER BURNHAM AVENUE
STRUCTURE NO. 016-2791 STA. 6+772.591
SECTION 1977-121-R
COOK COUNTY

NORTH & SOUTH PARAPET DETAILS

DATE: 8/18/2004
DRAWN BY: LAR
CHECKED BY: MJK

TENG
TENG & ASSOCIATES, INC.
ENGINEERS/ARCHITECTS/PLANNERS
CHICAGO, ILLINOIS

7-9-2005, 13:32:22 T:\DOCUMENT\93750\STRUCT\DGN\SU96152A.DGN BALZEKKJ