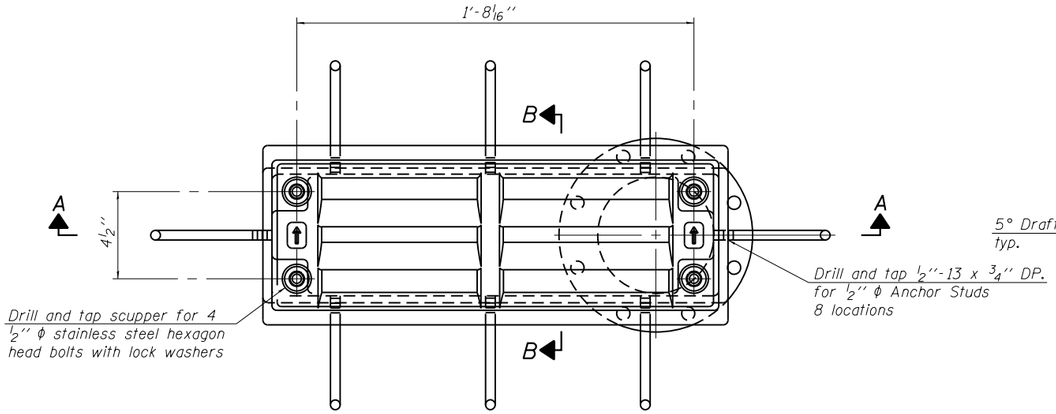

PLAN

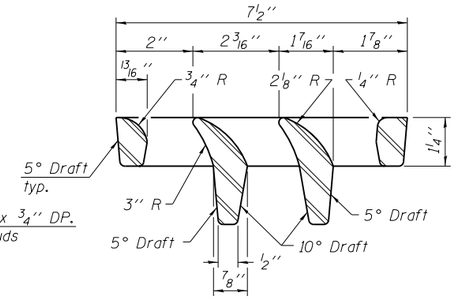

VANE GRATE DETAIL

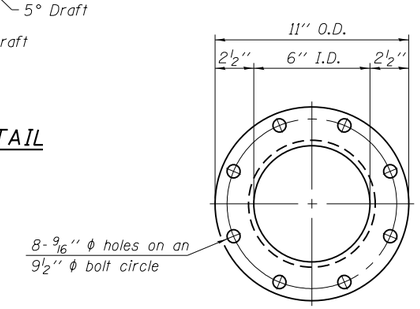

Notes:

All cast iron parts shall be gray iron conforming to the requirements of AASHTO M 105, Class 35B.

Bolts, anchor studs, washers and nuts shall conform to the requirements of ASTM A 307 and shall be galvanized according to AASHTO M 232.

Downspouts located on the exterior side of a painted steel fascia beam shall be painted with the finish coat specified for the exterior side of the fascia beam.

As an alternate, bolts, anchor studs, washers and nuts may be stainless steel according to Article 1006.29(d) of the Standard Specifications.

Structural steel weldments of equal sections and of the same configuration may be substituted for the cast iron scupper frame. Fillet or full penetration welds shall be used for the weldments. Details shall be submitted to the Engineer for approval. Structural steel weldments shall not be substituted for the cast iron scupper grate. Structural steel frames and downspouts shall be galvanized according to AASHTO M111.

The Contractor shall take appropriate measures to assure that Protective Coat is not applied to the scupper.

Cost of the Grate, Frame, Downspout, Anchor Studs, Bolts, Washers and Nuts including complete installation of the scupper shall be paid for at the contract unit price each for Drainage Scupper, DS-12.

Alternate fiberglass downspout conforming to ASTM D 2996 with a short-time rupture strength hoop tensile stress of 30,000 psi min. may be used in lieu of the cast iron or steel equivalent.

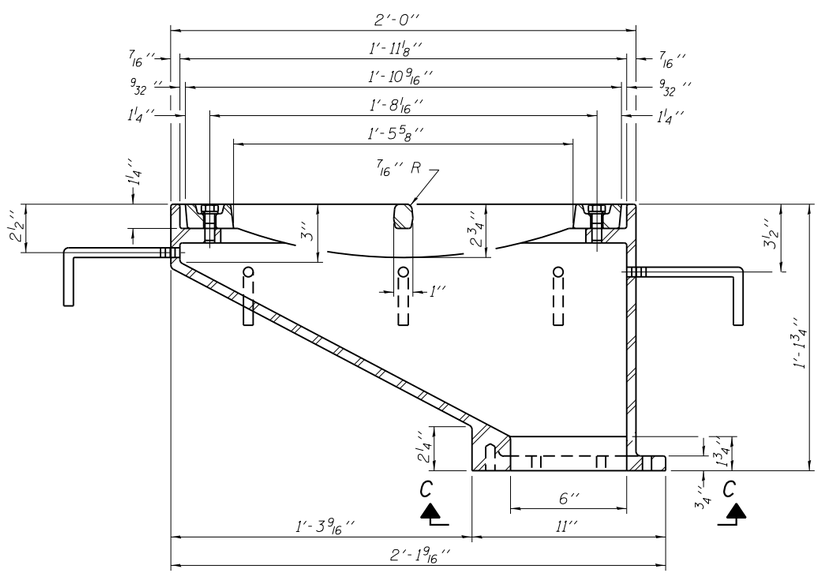

SECTION A-A

See sheets 17 and 19 of 47 for scupper location relative to curb.

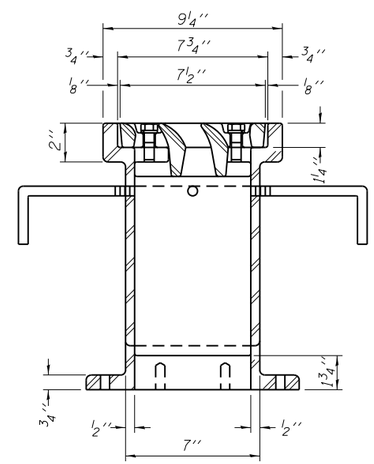

SECTION B-B

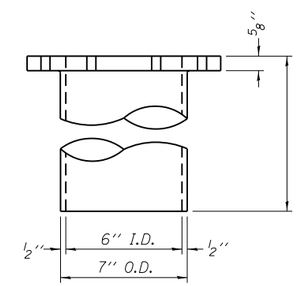

DOWNSPOUT

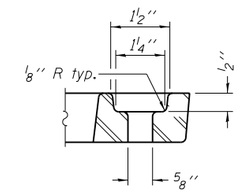

BOLT HOLE DETAIL

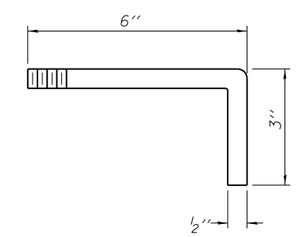

ANCHOR STUD DETAIL

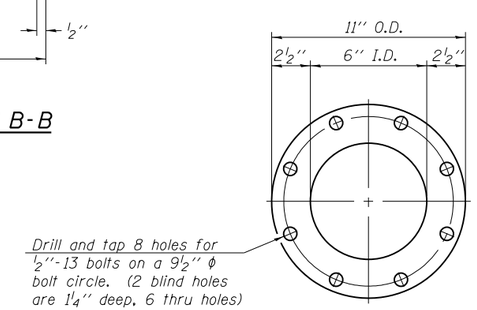

VIEW C-C

BILL OF MATERIAL

ITEM	UNIT	QUANTITY
Drainage Scuppers, DS-12	Each	12

DS-12 7-1-10

T:\5106-US6\Struct\dgn\Land Bridges\Land Bridge 1 - 016-D010\016D010-60L72-023-SP.dgn

LOCHNER	USER NAME =	DESIGNED - LJB	REVISED
H. W. LOCHNER, INC. 225 WEST WASHINGTON STREET 12 TH FLOOR CHICAGO, ILLINOIS 60606	FILE NAME = 016D010-60L72-023-SP.dgn	CHECKED - RH	REVISED
	PLOT SCALE =	DRAWN - EF	REVISED
	PLOT DATE =	CHECKED - RH	REVISED

STATE OF ILLINOIS
DEPARTMENT OF TRANSPORTATION

DRAINAGE SCUPPER DS-12
STRUCTURE NO. 016-D010

SHEET NO. 23 OF 47 SHEETS

F.A.P. RTE.	SECTION	COUNTY	TOTAL SHEETS	SHEET NO.
351	2010-081-R	COOK	1045	401

CONTRACT NO. 60L72

ILLINOIS FED. AID PROJECT

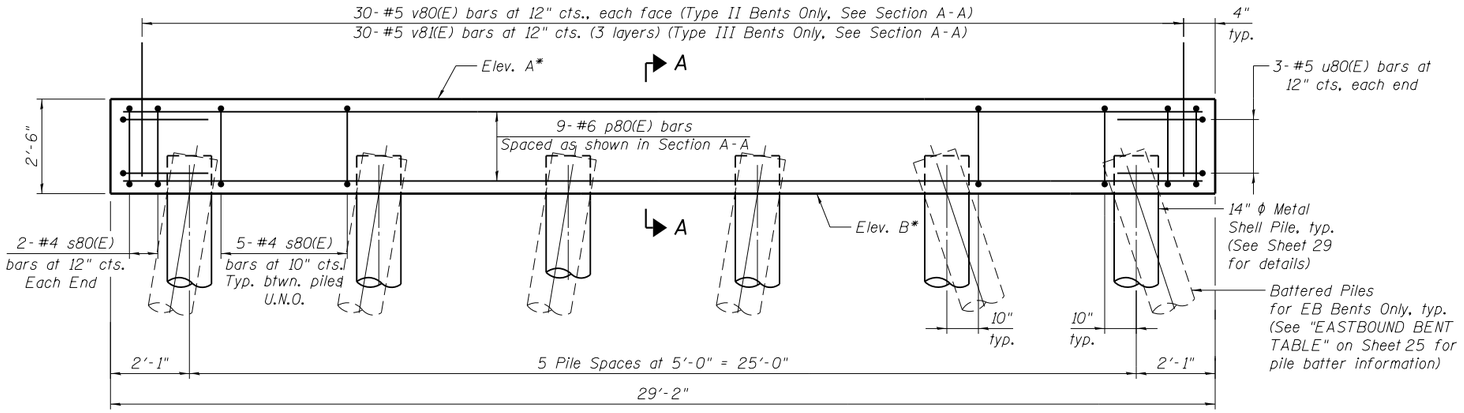

ELEVATION

(Looking East)

*For Elev. A & B, see Sheet 25

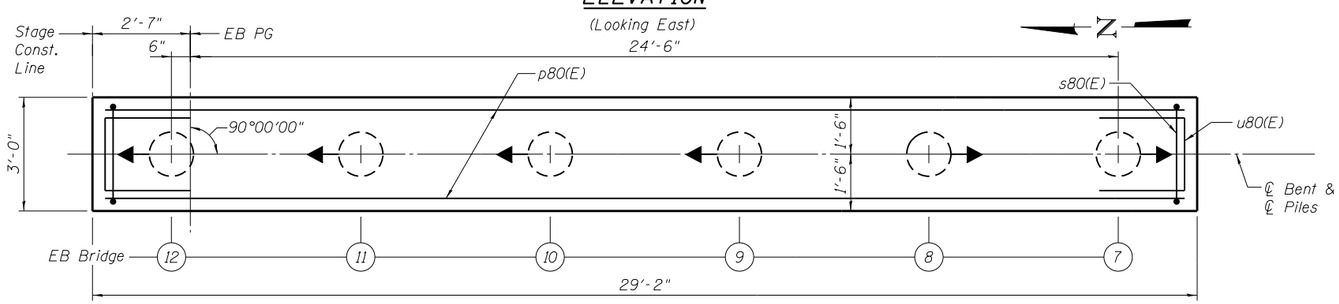

EB BENT PLAN

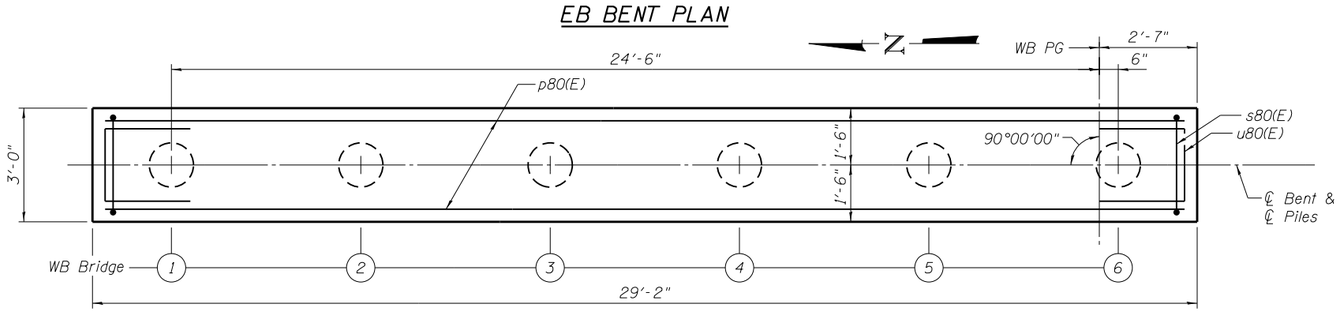

WB BENT PLAN

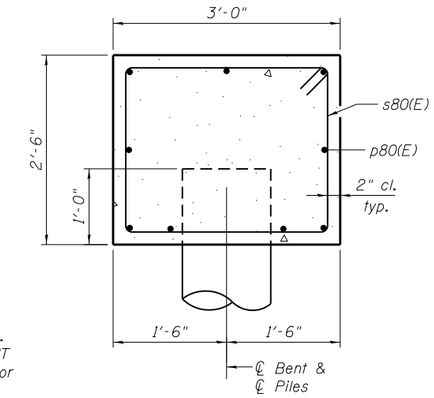

TYPE I BENT
SECTION A-A THRU EXPANSION BENT

(See "WESTBOUND BENT TABLE" and "EASTBOUND BENT TABLE" on Sheet 25 for detail bent information)

PILE DATA

Type: Metal Shell - 14 in. dia. x 0.25 in. wall
Nominal Required Bearing: See Table
Factored Resistance Available: See Table
Est. Length: See Table
No. Production Piles: See Table
No. Test Piles: See Table

LEGEND

Indicates Pile Battered in Direction of Arrow

Indicates Vertical Pile

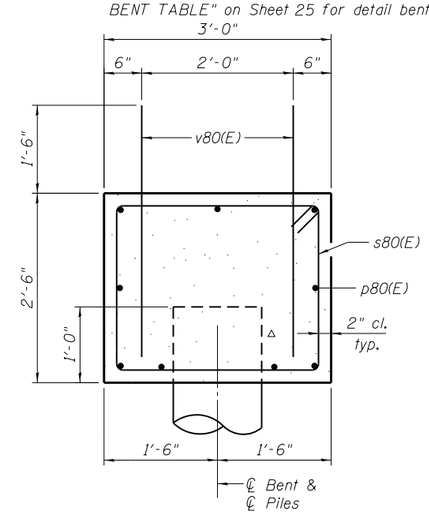

TYPE II BENT
SECTION A-A THRU FIXED BENT

(See "WESTBOUND BENT TABLE" and "EASTBOUND BENT TABLE" on Sheet 25 for detail bent information)

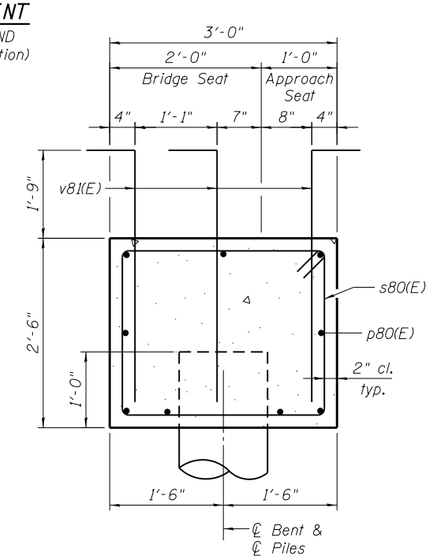

TYPE III BENT
SECTION A-A THRU END BENT

(See "WESTBOUND BENT TABLE" and "EASTBOUND BENT TABLE" on Sheet 25 for detail bent information)

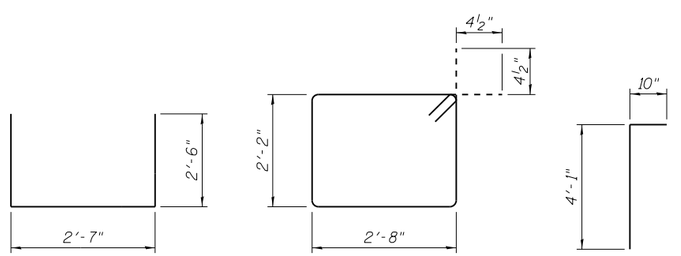

BAR u80(E) BAR s80(E) BAR v81(E)

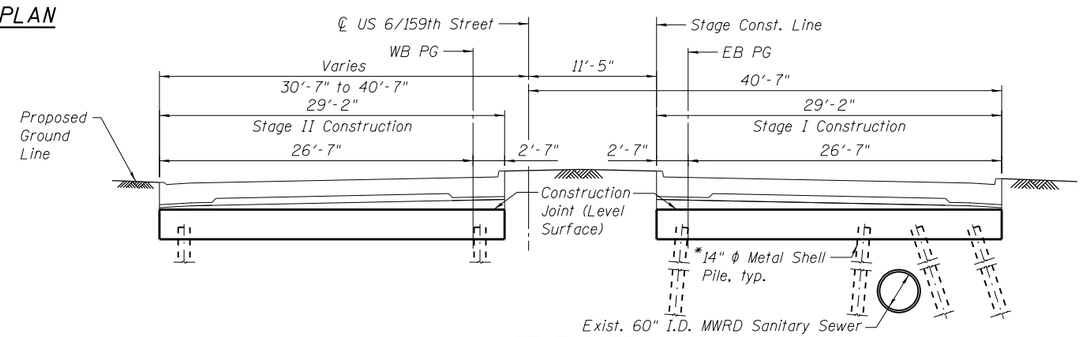

BENT SKETCH

(Looking East)

*Space piles to miss exisiting 60" I.D. MWRD Sanitary Sewer (See Note 5)

NOTES

1. For Metal Shell Pile Details, see Sheet 29.
2. For Pile Data Table, see Sheet 25.
3. Apply Concrete Sealer to top and sides of Bent Cap of WB Bents 4, 9, 14, 19, 24, 29 and 34 and EB Bents 6, 11, 16 and 21.
4. For pile bent layout, see Sheets 1 and 2.
5. The Contractor shall coordinate with MWRD to verify the location of the existing 60" I.D. MWRD sanitary sewer pipe in the field and advise the Engineer of discrepancies prior to the pile installation. The Contractor must take special precautions to avoid damage to the existing MWRD facilities when driving the 14" ϕ metal shell piles. The Contractor may propose other means of pile installation provided they are done so at no extra cost to the Department. If the Contractor elects to vary from the design requirements shown on the plans, revised design calculations and details shall be submitted to the Engineer for approval. The calculations shall be prepared and sealed by an Illinois Licensed Structural Engineer.

T:\5186-US6\Structs\dgn\Land Bridges\Land Bridge 1 - 016-D010\016D010-60L72-024-BD.dgn

WESTBOUND BENT TABLE

BENT CAP TABLE				PILE DATA TABLE					
Bent	Type of Pile Bent	Elev. A	Elev. B	Nominal Required Bearing (kips)	Factored Resistance Available (kips)	Est. Pile Length (ft.)	Precore to Est. Elev.	No. Prod. Piles	No. Test Piles
1	III	691.01	688.51	283	156	44	680	5	1
2	II	690.61	688.11	283	156	44	680	6	0
3	II	690.16	687.66	253	137	59	680	6	0
4	I	689.67	687.17	253	137	59	680	6	0
5	II	689.18	686.68	253	137	59	680	5	1
6	II	688.69	686.19	382	186	45	680	6	0
7	II	688.20	685.70	382	186	45	680	6	0
8	II	687.73	685.23	307	135	74	680	6	0
9	I	687.28	684.78	307	135	74	680	5	1
10	II	686.88	684.38	307	135	74	680	6	0
11	II	686.52	684.02	307	135	74	680	6	0
12	II	686.20	683.70	350	140	68	680	6	0
13	II	685.93	683.43	350	140	68	680	5	1
14	I	685.70	683.20	258	137	73	680	6	0
15	II	685.52	683.02	258	137	73	680	6	0
16	II	685.37	682.87	258	137	73	680	6	0
17	II	685.28	682.78	258	137	73	680	5	1
18	II	685.22	682.72	331	165	56	680	6	0
19	I	685.21	682.71	289	135	78	676	6	0
20	II	685.24	682.74	289	135	78	676	6	0
21	II	685.32	682.82	289	135	78	676	5	1
22	II	685.44	682.94	413	221	41	678	6	0
23	II	685.56	683.06	413	221	41	678	6	0
24	I	685.68	683.18	413	221	41	678	6	0
25	II	685.79	683.29	413	221	41	678	5	1
26	II	685.91	683.41	413	221	41	678	6	0
27	II	686.03	683.53	386	211	72	678	6	0
28	II	686.15	683.65	386	211	72	678	6	0
29	I	686.26	683.76	386	211	72	678	5	1
30	II	686.38	683.88	321	144	72	678	6	0
31	II	686.50	684.00	321	144	72	678	6	0
32	II	686.62	684.12	321	144	72	678	6	0
33	II	686.73	684.23	321	144	72	678	5	1
34	I	686.85	684.35	321	144	72	678	6	0
35	II	686.97	684.47	278	153	42	-	6	0
36	II	687.08	684.58	278	153	42	-	6	0
37	III	687.20	684.70	278	153	42	-	5	1

EASTBOUND BENT TABLE

BENT CAP TABLE				PILE DATA TABLE						PILE BATTER INFORMATION					
Bent	Type of Pile Bent	Elev. A	Elev. B	Nominal Required Bearing (kips)	Factored Resistance Available (kips)	Est. Pile Length (ft.)	Precore to Est. Elev.	No. Prod. Piles	No. Test Piles	Pile No. 7	Pile No. 8	Pile No. 9	Pile No. 10	Pile No. 11	Pile No. 12
1	III	685.64	683.14	350	140	72	680	6	0	-4:12	-4:12	1:12	1:12	1:12	1:12
2	II	685.47	682.97	258	137	77	680	5	1	-4:12	-4:12	1:12	1:12	1:12	1:12
3	II	685.34	682.84	258	137	77	680	6	0	-4:12	-4:12	1:12	1:12	1:12	1:12
4	II	685.26	682.76	331	165	59	680	6	0	-4:12	-4:12	1:12	1:12	1:12	1:12
5	II	685.21	682.71	331	165	59	680	6	0	-4:12	-4:12	1:12	1:12	1:12	1:12
6	I	685.22	682.72	289	135	83	676	5	1	-4:12	-4:12	1:12	1:12	1:12	1:12
7	II	685.26	682.76	289	135	83	676	6	0	-4:12	-4:12	1:12	1:12	1:12	1:12
8	II	685.35	682.85	289	135	83	676	6	0	-4:12	-4:12	1:12	1:12	1:12	1:12
9	II	685.48	682.98	413	221	44	678	6	0	-4:12	-4:12	1:12	1:12	1:12	1:12
10	II	685.60	683.10	413	221	44	678	5	1	-4:12	-4:12	1:12	1:12	1:12	1:12
11	I	685.71	683.21	413	221	44	678	6	0	-4:12	-4:12	1:12	1:12	1:12	1:12
12	II	685.83	683.33	413	221	44	678	6	0	-4:12	-4:12	1:12	1:12	1:12	1:12
13	II	685.95	683.45	299	159	75	678	6	0	-4:12	-4:12	1:12	1:12	1:12	1:12
14	II	686.06	683.56	299	159	75	678	5	1	-4:12	-4:12	2:12	2:12	2:12	2:12
15	II	686.18	683.68	299	159	75	678	6	0	-4:12	-4:12	2:12	2:12	2:12	2:12
16	I	686.30	683.80	299	159	75	678	6	0	-4:12	-4:12	2:12	2:12	2:12	2:12
17	II	686.42	683.92	322	139	59	678	6	0	-4:12	-4:12	2:12	2:12	2:12	2:12
18	II	686.53	684.03	322	139	59	678	5	1	-4:12	-4:12	1:12	1:12	1:12	1:12
19	II	686.65	684.15	322	139	59	678	6	0	-4:12	-4:12	1:12	1:12	1:12	1:12
20	II	686.77	684.27	322	139	59	678	6	0	-4:12	-4:12	1:12	1:12	1:12	1:12
21	I	686.89	684.39	322	139	59	678	6	0	-4:12	-4:12	1:12	1:12	1:12	1:12
22	II	687.00	684.50	278	153	45	-	5	1	-4:12	-4:12	1:12	1:12	1:12	1:12
23	II	687.12	684.62	278	153	45	-	6	0	-4:12	-4:12	1:12	1:12	1:12	1:12
24	III	687.24	684.74	278	153	45	-	6	0	-4:12	-4:12	1:12	1:12	1:12	1:12

Note: A positive batter indicates piles to be battered toward the ℄ US 6/159th Street. A negative batter indicates piles to be battered away from the ℄ US 6/159th Street.

NOTES

1. For pile bent layout, see Sheets 1 and 2.
2. If peat soils are present above the estimated elevation of precore, the contractor shall cease the precore at the elevation peat is encountered in the field during construction.
3. Cost of precoring for pile installation is included with DRIVING PILES.

BILL OF MATERIAL BENT 1 WB

Bar	No.	Size	Length	Shape
p80(E)	9	#6	28'-10"	——
s80(E)	29	#4	10'-5"	☐
u80(E)	6	#5	7'-7"	⊔
v81(E)	90	#5	4'-11"	⊥
Concrete Structures			Cu. Yd.	8.1
Reinforcement Bars, Epoxy Coated			Pound	1110
Structure Excavation			Cu. Yd.	26
Furnishing Metal Shell Piles - 14" X 0.25"			Foot	220
Driving Piles			Foot	220
Test Pile Metal Shells			Each	1

BILL OF MATERIAL BENT 2 WB

Bar	No.	Size	Length	Shape
p80(E)	9	#6	28'-10"	——
s80(E)	29	#4	10'-5"	☐
u80(E)	6	#5	7'-7"	⊔
v80(E)	60	#5	3'-10"	——
Concrete Structures			Cu. Yd.	8.1
Reinforcement Bars, Epoxy Coated			Pound	880
Structure Excavation			Cu. Yd.	28
Furnishing Metal Shell Piles - 14" X 0.25"			Foot	264
Driving Piles			Foot	264

BILL OF MATERIAL BENT 3 WB

Bar	No.	Size	Length	Shape
p80(E)	9	#6	28'-10"	——
s80(E)	29	#4	10'-5"	☐
u80(E)	6	#5	7'-7"	⊔
v80(E)	60	#5	3'-10"	——
Concrete Structures			Cu. Yd.	8.1
Reinforcement Bars, Epoxy Coated			Pound	880
Structure Excavation			Cu. Yd.	25
Furnishing Metal Shell Piles - 14" X 0.25"			Foot	354
Driving Piles			Foot	354

BILL OF MATERIAL BENT 4 WB

Bar	No.	Size	Length	Shape
p80(E)	9	#6	28'-10"	——
s80(E)	29	#4	10'-5"	☐
u80(E)	6	#5	7'-7"	⊔
Concrete Structures			Cu. Yd.	8.1
Reinforcement Bars, Epoxy Coated			Pound	640
Structure Excavation			Cu. Yd.	26
Furnishing Metal Shell Piles - 14" X 0.25"			Foot	354
Driving Piles			Foot	354
Concrete Sealer			Sq. Ft.	249

BILL OF MATERIAL BENT 5 WB

Bar	No.	Size	Length	Shape
p80(E)	9	#6	28'-10"	——
s80(E)	29	#4	10'-5"	☐
u80(E)	6	#5	7'-7"	⊔
v80(E)	60	#5	3'-10"	——
Concrete Structures			Cu. Yd.	8.1
Reinforcement Bars, Epoxy Coated			Pound	880
Structure Excavation			Cu. Yd.	28
Furnishing Metal Shell Piles - 14" X 0.25"			Foot	295
Driving Piles			Foot	295
Test Pile Metal Shells			Each	1

BILL OF MATERIAL BENT 6 WB

Bar	No.	Size	Length	Shape
p80(E)	9	#6	28'-10"	——
s80(E)	29	#4	10'-5"	☐
u80(E)	6	#5	7'-7"	⊔
v80(E)	60	#5	3'-10"	——
Concrete Structures			Cu. Yd.	8.1
Reinforcement Bars, Epoxy Coated			Pound	880
Structure Excavation			Cu. Yd.	28
Furnishing Metal Shell Piles - 14" X 0.25"			Foot	270
Driving Piles			Foot	270

BILL OF MATERIAL BENT 7 WB

Bar	No.	Size	Length	Shape
p80(E)	9	#6	28'-10"	——
s80(E)	29	#4	10'-5"	☐
u80(E)	6	#5	7'-7"	⊔
v80(E)	60	#5	3'-10"	——
Concrete Structures			Cu. Yd.	8.1
Reinforcement Bars, Epoxy Coated			Pound	880
Structure Excavation			Cu. Yd.	28
Furnishing Metal Shell Piles - 14" X 0.25"			Foot	270
Driving Piles			Foot	270

BILL OF MATERIAL BENT 8 WB

Bar	No.	Size	Length	Shape
p80(E)	9	#6	28'-10"	——
s80(E)	29	#4	10'-5"	☐
u80(E)	6	#5	7'-7"	⊔
v80(E)	60	#5	3'-10"	——
Concrete Structures			Cu. Yd.	8.1
Reinforcement Bars, Epoxy Coated			Pound	880
Structure Excavation			Cu. Yd.	25
Furnishing Metal Shell Piles - 14" X 0.25"			Foot	444
Driving Piles			Foot	444

BILL OF MATERIAL BENT 9 WB

Bar	No.	Size	Length	Shape
p80(E)	9	#6	28'-10"	——
s80(E)	29	#4	10'-5"	☐
u80(E)	6	#5	7'-7"	⊔
Concrete Structures			Cu. Yd.	8.1
Reinforcement Bars, Epoxy Coated			Pound	640
Structure Excavation			Cu. Yd.	28
Furnishing Metal Shell Piles - 14" X 0.25"			Foot	370
Driving Piles			Foot	370
Test Pile Metal Shells			Each	1
Concrete Sealer			Sq. Ft.	249

BILL OF MATERIAL BENT 10 WB

Bar	No.	Size	Length	Shape
p80(E)	9	#6	28'-10"	——
s80(E)	29	#4	10'-5"	☐
u80(E)	6	#5	7'-7"	⊔
v80(E)	60	#5	3'-10"	——
Concrete Structures			Cu. Yd.	8.1
Reinforcement Bars, Epoxy Coated			Pound	880
Structure Excavation			Cu. Yd.	26
Furnishing Metal Shell Piles - 14" X 0.25"			Foot	444
Driving Piles			Foot	444

BILL OF MATERIAL BENT 11 WB

Bar	No.	Size	Length	Shape
p80(E)	9	#6	28'-10"	——
s80(E)	29	#4	10'-5"	☐
u80(E)	6	#5	7'-7"	⊔
v80(E)	60	#5	3'-10"	——
Concrete Structures			Cu. Yd.	8.1
Reinforcement Bars, Epoxy Coated			Pound	880
Structure Excavation			Cu. Yd.	27
Furnishing Metal Shell Piles - 14" X 0.25"			Foot	444
Driving Piles			Foot	444

BILL OF MATERIAL BENT 12 WB

Bar	No.	Size	Length	Shape
p80(E)	9	#6	28'-10"	——
s80(E)	29	#4	10'-5"	☐
u80(E)	6	#5	7'-7"	⊔
v80(E)	60	#5	3'-10"	——
Concrete Structures			Cu. Yd.	8.1
Reinforcement Bars, Epoxy Coated			Pound	880
Structure Excavation			Cu. Yd.	27
Furnishing Metal Shell Piles - 14" X 0.25"			Foot	408
Driving Piles			Foot	408

BILL OF MATERIAL BENT 13 WB

Bar	No.	Size	Length	Shape
p80(E)	9	#6	28'-10"	——
s80(E)	29	#4	10'-5"	☐
u80(E)	6	#5	7'-7"	⊔
v80(E)	60	#5	3'-10"	——
Concrete Structures			Cu. Yd.	8.1
Reinforcement Bars, Epoxy Coated			Pound	880
Structure Excavation			Cu. Yd.	26
Furnishing Metal Shell Piles - 14" X 0.25"			Foot	340
Driving Piles			Foot	340
Test Pile Metal Shells			Each	1

BILL OF MATERIAL BENT 14 WB

Bar	No.	Size	Length	Shape
p80(E)	9	#6	28'-10"	——
s80(E)	29	#4	10'-5"	☐
u80(E)	6	#5	7'-7"	⊔
Concrete Structures			Cu. Yd.	8.1
Reinforcement Bars, Epoxy Coated			Pound	640
Structure Excavation			Cu. Yd.	26
Furnishing Metal Shell Piles - 14" X 0.25"			Foot	438
Driving Piles			Foot	438
Concrete Sealer			Sq. Ft.	249

BILL OF MATERIAL BENT 15 WB

Bar	No.	Size	Length	Shape
p80(E)	9	#6	28'-10"	——
s80(E)	29	#4	10'-5"	☐
u80(E)	6	#5	7'-7"	⊔
v80(E)	60	#5	3'-10"	——
Concrete Structures			Cu. Yd.	8.1
Reinforcement Bars, Epoxy Coated			Pound	880
Structure Excavation			Cu. Yd.	27
Furnishing Metal Shell Piles - 14" X 0.25"			Foot	438
Driving Piles			Foot	438

BILL OF MATERIAL BENT 16 WB

Bar	No.	Size	Length	Shape
p80(E)	9	#6	28'-10"	——
s80(E)	29	#4	10'-5"	☐
u80(E)	6	#5	7'-7"	⊔
v80(E)	60	#5	3'-10"	——
Concrete Structures			Cu. Yd.	8.1
Reinforcement Bars, Epoxy Coated			Pound	880
Structure Excavation			Cu. Yd.	29
Furnishing Metal Shell Piles - 14" X 0.25"			Foot	438
Driving Piles			Foot	438

BILL OF MATERIAL BENT 17 WB

Bar	No.	Size	Length	Shape
p80(E)	9	#6	28'-10"	——
s80(E)	29	#4	10'-5"	☐
u80(E)	6	#5	7'-7"	⊔
v80(E)	60	#5	3'-10"	——
Concrete Structures			Cu. Yd.	8.1
Reinforcement Bars, Epoxy Coated			Pound	880
Structure Excavation			Cu. Yd.	29
Furnishing Metal Shell Piles - 14" X 0.25"			Foot	365
Driving Piles			Foot	365
Test Pile Metal Shells			Each	1

BILL OF MATERIAL BENT 18 WB

Bar	No.	Size	Length	Shape
p80(E)	9	#6	28'-10"	——
s80(E)	29	#4	10'-5"	☐
u80(E)	6	#5	7'-7"	⊔
v80(E)	60	#5	3'-10"	——
Concrete Structures			Cu. Yd.	8.1
Reinforcement Bars, Epoxy Coated			Pound	880
Structure Excavation			Cu. Yd.	28
Furnishing Metal Shell Piles - 14" X 0.25"			Foot	336
Driving Piles			Foot	336

BILL OF MATERIAL BENT 19 WB

Bar	No.	Size	Length	Shape
p80(E)	9	#6	28'-10"	——
s80(E)	29	#4	10'-5"	☐
u80(E)	6	#5	7'-7"	⊔
Concrete Structures			Cu. Yd.	8.1
Reinforcement Bars, Epoxy Coated			Pound	640
Structure Excavation			Cu. Yd.	28
Furnishing Metal Shell Piles - 14" X 0.25"			Foot	468
Driving Piles			Foot	468
Concrete Sealer			Sq. Ft.	249

BILL OF MATERIAL BENT 20 WB

Bar	No.	Size	Length	Shape
p80(E)	9	#6	28'-10"	——
s80(E)	29	#4	10'-5"	☐
u80(E)	6	#5	7'-7"	⊔
v80(E)	60	#5	3'-10"	——
Concrete Structures			Cu. Yd.	8.1
Reinforcement Bars, Epoxy Coated			Pound	880
Structure Excavation			Cu. Yd.	29
Furnishing Metal Shell Piles - 14" X 0.25"			Foot	468
Driving Piles			Foot	468

BILL OF MATERIAL BENT 21 WB

Bar	No.	Size	Length	Shape
p80(E)	9	#6	28'-10"	——
s80(E)	29	#4	10'-5"	☐
u80(E)	6	#5	7'-7"	⊔
v80(E)	60	#5	3'-10"	——
Concrete Structures			Cu. Yd.	8.1
Reinforcement Bars, Epoxy Coated			Pound	880
Structure Excavation			Cu. Yd.	29
Furnishing Metal Shell Piles - 14" X 0.25"			Foot	390
Driving Piles			Foot	390
Test Pile Metal Shells			Each	1

BILL OF MATERIAL BENT 22 WB

Bar	No.	Size	Length	Shape
p80(E)	9	#6	28'-10"	——
s80(E)	29	#4	10'-5"	☐
u80(E)	6	#5	7'-7"	⊔
v80(E)	60	#5	3'-10"	——
Concrete Structures			Cu. Yd.	8.1
Reinforcement Bars, Epoxy Coated			Pound	880
Structure Excavation			Cu. Yd.	28
Furnishing Metal Shell Piles - 14" X 0.25"			Foot	246
Driving Piles			Foot	246

BILL OF MATERIAL BENT 23 WB

Bar	No.	Size	Length	Shape
p80(E)	9	#6	28'-10"	——
s80(E)	29	#4	10'-5"	☐
u80(E)	6	#5	7'-7"	⊔
v80(E)	60	#5	3'-10"	——
Concrete Structures			Cu. Yd.	8.1
Reinforcement Bars, Epoxy Coated			Pound	880
Structure Excavation			Cu. Yd.	27
Furnishing Metal Shell Piles - 14" X 0.25"			Foot	246
Driving Piles			Foot	246

BILL OF MATERIAL BENT 24 WB

Bar	No.	Size	Length	Shape
p80(E)	9	#6	28'-10"	——
s80(E)	29	#4	10'-5"	☐
u80(E)	6	#5	7'-7"	⊔
Concrete Structures			Cu. Yd.	8.1
Reinforcement Bars, Epoxy Coated			Pound	640
Structure Excavation			Cu. Yd.	26
Furnishing Metal Shell Piles - 14" X 0.25"			Foot	246
Driving Piles			Foot	246
Concrete Sealer			Sq. Ft.	249

BILL OF MATERIAL BENT 25 WB

Bar	No.	Size	Length	Shape
p80(E)	9	#6	28'-10"	——
s80(E)	29	#4	10'-5"	☐
u80(E)	6	#5	7'-7"	⊔
v80(E)	60	#5	3'-10"	——
Concrete Structures			Cu. Yd.	8.1
Reinforcement Bars, Epoxy Coated			Pound	880
Structure Excavation			Cu. Yd.	25
Furnishing Metal Shell Piles - 14" X 0.25"			Foot	205
Driving Piles			Foot	205
Test Pile Metal Shells			Each	1

T:\5106-USE\Struct\dgn\Land Bridges\Land Bridge 1 - 016-D010\016D010-60L72-026-BD.dgn

BILL OF MATERIAL BENT 26 WB

Bar	No.	Size	Length	Shape
p80(E)	9	#6	28'-10"	——
s80(E)	29	#4	10'-5"	☐
u80(E)	6	#5	7'-7"	⊔
v80(E)	60	#5	3'-10"	——
Concrete Structures			Cu. Yd.	8.1
Reinforcement Bars, Epoxy Coated			Pound	880
Structure Excavation			Cu. Yd.	23
Furnishing Metal Shell Piles - 14" X 0.25"			Foot	246
Driving Piles			Foot	246

BILL OF MATERIAL BENT 27 WB

Bar	No.	Size	Length	Shape
p80(E)	9	#6	28'-10"	——
s80(E)	29	#4	10'-5"	☐
u80(E)	6	#5	7'-7"	⊔
v80(E)	60	#5	3'-10"	——
Concrete Structures			Cu. Yd.	8.1
Reinforcement Bars, Epoxy Coated			Pound	880
Structure Excavation			Cu. Yd.	22
Furnishing Metal Shell Piles - 14" X 0.25"			Foot	432
Driving Piles			Foot	432

BILL OF MATERIAL BENT 28 WB

Bar	No.	Size	Length	Shape
p80(E)	9	#6	28'-10"	——
s80(E)	29	#4	10'-5"	☐
u80(E)	6	#5	7'-7"	⊔
v80(E)	60	#5	3'-10"	——
Concrete Structures			Cu. Yd.	8.1
Reinforcement Bars, Epoxy Coated			Pound	880
Structure Excavation			Cu. Yd.	21
Furnishing Metal Shell Piles - 14" X 0.25"			Foot	432
Driving Piles			Foot	432

BILL OF MATERIAL BENT 29 WB

Bar	No.	Size	Length	Shape
p80(E)	9	#6	28'-10"	——
s80(E)	29	#4	10'-5"	☐
u80(E)	6	#5	7'-7"	⊔
Concrete Structures			Cu. Yd.	8.1
Reinforcement Bars, Epoxy Coated			Pound	640
Structure Excavation			Cu. Yd.	21
Furnishing Metal Shell Piles - 14" X 0.25"			Foot	360
Driving Piles			Foot	360
Test Pile Metal Shells			Each	1
Concrete Sealer			Sq. Ft.	249

BILL OF MATERIAL BENT 30 WB

Bar	No.	Size	Length	Shape
p80(E)	9	#6	28'-10"	——
s80(E)	29	#4	10'-5"	☐
u80(E)	6	#5	7'-7"	⊔
v80(E)	60	#5	3'-10"	——
Concrete Structures			Cu. Yd.	8.1
Reinforcement Bars, Epoxy Coated			Pound	880
Structure Excavation			Cu. Yd.	20
Furnishing Metal Shell Piles - 14" X 0.25"			Foot	432
Driving Piles			Foot	432

BILL OF MATERIAL BENT 31 WB

Bar	No.	Size	Length	Shape
p80(E)	9	#6	28'-10"	——
s80(E)	29	#4	10'-5"	☐
u80(E)	6	#5	7'-7"	⊔
v80(E)	60	#5	3'-10"	——
Concrete Structures			Cu. Yd.	8.1
Reinforcement Bars, Epoxy Coated			Pound	880
Structure Excavation			Cu. Yd.	20
Furnishing Metal Shell Piles - 14" X 0.25"			Foot	432
Driving Piles			Foot	432

BILL OF MATERIAL BENT 32 WB

Bar	No.	Size	Length	Shape
p80(E)	9	#6	28'-10"	——
s80(E)	29	#4	10'-5"	☐
u80(E)	6	#5	7'-7"	⊔
v80(E)	60	#5	3'-10"	——
Concrete Structures			Cu. Yd.	8.1
Reinforcement Bars, Epoxy Coated			Pound	880
Structure Excavation			Cu. Yd.	21
Furnishing Metal Shell Piles - 14" X 0.25"			Foot	432
Driving Piles			Foot	432

BILL OF MATERIAL BENT 33 WB

Bar	No.	Size	Length	Shape
p80(E)	9	#6	28'-10"	——
s80(E)	29	#4	10'-5"	☐
u80(E)	6	#5	7'-7"	⊔
v80(E)	60	#5	3'-10"	——
Concrete Structures			Cu. Yd.	8.1
Reinforcement Bars, Epoxy Coated			Pound	880
Structure Excavation			Cu. Yd.	20
Furnishing Metal Shell Piles - 14" X 0.25"			Foot	360
Driving Piles			Foot	360
Test Pile Metal Shells			Each	1

BILL OF MATERIAL BENT 34 WB

Bar	No.	Size	Length	Shape
p80(E)	9	#6	28'-10"	——
s80(E)	29	#4	10'-5"	☐
u80(E)	6	#5	7'-7"	⊔
Concrete Structures			Cu. Yd.	8.1
Reinforcement Bars, Epoxy Coated			Pound	640
Structure Excavation			Cu. Yd.	19
Furnishing Metal Shell Piles - 14" X 0.25"			Foot	432
Driving Piles			Foot	432
Concrete Sealer			Sq. Ft.	249

BILL OF MATERIAL BENT 35 WB

Bar	No.	Size	Length	Shape
p80(E)	9	#6	28'-10"	——
s80(E)	29	#4	10'-5"	☐
u80(E)	6	#5	7'-7"	⊔
v80(E)	60	#5	3'-10"	——
Concrete Structures			Cu. Yd.	8.1
Reinforcement Bars, Epoxy Coated			Pound	880
Structure Excavation			Cu. Yd.	20
Furnishing Metal Shell Piles - 14" X 0.25"			Foot	252
Driving Piles			Foot	252

BILL OF MATERIAL BENT 36 WB

Bar	No.	Size	Length	Shape
p80(E)	9	#6	28'-10"	——
s80(E)	29	#4	10'-5"	☐
u80(E)	6	#5	7'-7"	⊔
v80(E)	60	#5	3'-10"	——
Concrete Structures			Cu. Yd.	8.1
Reinforcement Bars, Epoxy Coated			Pound	880
Structure Excavation			Cu. Yd.	20
Furnishing Metal Shell Piles - 14" X 0.25"			Foot	252
Driving Piles			Foot	252

BILL OF MATERIAL BENT 37 WB

Bar	No.	Size	Length	Shape
p80(E)	9	#6	28'-10"	——
s80(E)	29	#4	10'-5"	☐
u80(E)	6	#5	7'-7"	⊔
v81(E)	90	#5	4'-11"	⊔
Concrete Structures			Cu. Yd.	8.1
Reinforcement Bars, Epoxy Coated			Pound	1110
Structure Excavation			Cu. Yd.	20
Furnishing Metal Shell Piles - 14" X 0.25"			Foot	210
Driving Piles			Foot	210
Test Pile Metal Shells			Each	1

BILL OF MATERIAL BENT 1 EB

Bar	No.	Size	Length	Shape
p80(E)	9	#6	28'-10"	——
s80(E)	29	#4	10'-5"	☐
u80(E)	6	#5	7'-7"	⊔
v81(E)	90	#5	4'-11"	⊔
Concrete Structures			Cu. Yd.	8.1
Reinforcement Bars, Epoxy Coated			Pound	1110
Structure Excavation			Cu. Yd.	33
Furnishing Metal Shell Piles - 14" X 0.25"			Foot	432
Driving Piles			Foot	432

BILL OF MATERIAL BENT 2 EB

Bar	No.	Size	Length	Shape
p80(E)	9	#6	28'-10"	——
s80(E)	29	#4	10'-5"	☐
u80(E)	6	#5	7'-7"	⊔
v80(E)	60	#5	3'-10"	——
Concrete Structures			Cu. Yd.	8.1
Reinforcement Bars, Epoxy Coated			Pound	880
Structure Excavation			Cu. Yd.	33
Furnishing Metal Shell Piles - 14" X 0.25"			Foot	385
Driving Piles			Foot	385
Test Pile Metal Shells			Each	1

BILL OF MATERIAL BENT 3 EB

Bar	No.	Size	Length	Shape
p80(E)	9	#6	28'-10"	——
s80(E)	29	#4	10'-5"	☐
u80(E)	6	#5	7'-7"	⊔
v80(E)	60	#5	3'-10"	——
Concrete Structures			Cu. Yd.	8.1
Reinforcement Bars, Epoxy Coated			Pound	880
Structure Excavation			Cu. Yd.	35
Furnishing Metal Shell Piles - 14" X 0.25"			Foot	462
Driving Piles			Foot	462

BILL OF MATERIAL BENT 4 EB

Bar	No.	Size	Length	Shape
p80(E)	9	#6	28'-10"	——
s80(E)	29	#4	10'-5"	☐
u80(E)	6	#5	7'-7"	⊔
v80(E)	60	#5	3'-10"	——
Concrete Structures			Cu. Yd.	8.1
Reinforcement Bars, Epoxy Coated			Pound	880
Structure Excavation			Cu. Yd.	36
Furnishing Metal Shell Piles - 14" X 0.25"			Foot	354
Driving Piles			Foot	354

BILL OF MATERIAL BENT 5 EB

Bar	No.	Size	Length	Shape
p80(E)	9	#6	28'-10"	——
s80(E)	29	#4	10'-5"	☐
u80(E)	6	#5	7'-7"	⊔
v80(E)	60	#5	3'-10"	——
Concrete Structures			Cu. Yd.	8.1
Reinforcement Bars, Epoxy Coated			Pound	880
Structure Excavation			Cu. Yd.	34
Furnishing Metal Shell Piles - 14" X 0.25"			Foot	354
Driving Piles			Foot	354

BILL OF MATERIAL BENT 6 EB

Bar	No.	Size	Length	Shape
p80(E)	9	#6	28'-10"	——
s80(E)	29	#4	10'-5"	☐
u80(E)	6	#5	7'-7"	⊔
Concrete Structures			Cu. Yd.	8.1
Reinforcement Bars, Epoxy Coated			Pound	640
Structure Excavation			Cu. Yd.	32
Furnishing Metal Shell Piles - 14" X 0.25"			Foot	415
Driving Piles			Foot	415
Test Pile Metal Shells			Each	1
Concrete Sealer			Sq. Ft.	249

T:\5106-USGS\Struct\dgn\Land Bridges\Land Bridge 1 - 016-D010\016D010-60L72-027-BD.dgn

LOCHNER
H. W. LOCHNER, INC.
225 WEST WASHINGTON STREET
12 TH FLOOR
CHICAGO, ILLINOIS 60606

USER NAME =	DESIGNED - LJB	REVISED
FILE NAME = 016D010-60L72-027-BD.dgn	CHECKED - RH	REVISED
PLOT SCALE =	DRAWN - EF	REVISED
PLOT DATE =	CHECKED - RH	REVISED

STATE OF ILLINOIS
DEPARTMENT OF TRANSPORTATION

TYPICAL BENT DETAILS 4
STRUCTURE NO. 016–D010

SHEET NO. 27 OF 47 SHEETS

F.A.P. RTE.	SECTION	COUNTY	TOTAL SHEETS	SHEET NO.
351	2010-081-R	COOK	1045	405

CONTRACT NO. 60L72

ILLINOIS FED. AID PROJECT

BILL OF MATERIAL - BENT 7 EB

Bar	No.	Size	Length	Shape
p80(E)	9	#6	28'-10"	——
s80(E)	29	#4	10'-5"	☐
u80(E)	6	#5	7'-7"	⊔
v80(E)	60	#5	3'-10"	——
Concrete Structures			Cu. Yd.	8.1
Reinforcement Bars, Epoxy Coated			Pound	880
Structure Excavation			Cu. Yd.	31
Furnishing Metal Shell Piles - 14" X 0.25"			Foot	498
Driving Piles			Foot	498

BILL OF MATERIAL - BENT 8 EB

Bar	No.	Size	Length	Shape
p80(E)	9	#6	28'-10"	——
s80(E)	29	#4	10'-5"	☐
u80(E)	6	#5	7'-7"	⊔
v80(E)	60	#5	3'-10"	——
Concrete Structures			Cu. Yd.	8.1
Reinforcement Bars, Epoxy Coated			Pound	880
Structure Excavation			Cu. Yd.	29
Furnishing Metal Shell Piles - 14" X 0.25"			Foot	498
Driving Piles			Foot	498

BILL OF MATERIAL - BENT 9 EB

Bar	No.	Size	Length	Shape
p80(E)	9	#6	28'-10"	——
s80(E)	29	#4	10'-5"	☐
u80(E)	6	#5	7'-7"	⊔
v80(E)	60	#5	3'-10"	——
Concrete Structures			Cu. Yd.	8.1
Reinforcement Bars, Epoxy Coated			Pound	880
Structure Excavation			Cu. Yd.	27
Furnishing Metal Shell Piles - 14" X 0.25"			Foot	264
Driving Piles			Foot	264

BILL OF MATERIAL - BENT 10 EB

Bar	No.	Size	Length	Shape
p80(E)	9	#6	28'-10"	——
s80(E)	29	#4	10'-5"	☐
u80(E)	6	#5	7'-7"	⊔
v80(E)	60	#5	3'-10"	——
Concrete Structures			Cu. Yd.	8.1
Reinforcement Bars, Epoxy Coated			Pound	880
Structure Excavation			Cu. Yd.	25
Furnishing Metal Shell Piles - 14" X 0.25"			Foot	220
Driving Piles			Foot	220
Test Pile Metal Shells			Each	1

BILL OF MATERIAL - BENT 11 EB

Bar	No.	Size	Length	Shape
p80(E)	9	#6	28'-10"	——
s80(E)	29	#4	10'-5"	☐
u80(E)	6	#5	7'-7"	⊔
Concrete Structures			Cu. Yd.	8.1
Reinforcement Bars, Epoxy Coated			Pound	640
Structure Excavation			Cu. Yd.	23
Furnishing Metal Shell Piles - 14" X 0.25"			Foot	264
Driving Piles			Foot	264
Concrete Sealer			Sq. Ft.	249

BILL OF MATERIAL - BENT 12 EB

Bar	No.	Size	Length	Shape
p80(E)	9	#6	28'-10"	——
s80(E)	29	#4	10'-5"	☐
u80(E)	6	#5	7'-7"	⊔
v80(E)	60	#5	3'-10"	——
Concrete Structures			Cu. Yd.	8.1
Reinforcement Bars, Epoxy Coated			Pound	880
Structure Excavation			Cu. Yd.	22
Furnishing Metal Shell Piles - 14" X 0.25"			Foot	264
Driving Piles			Foot	264

BILL OF MATERIAL - BENT 13 EB

Bar	No.	Size	Length	Shape
p80(E)	9	#6	28'-10"	——
s80(E)	29	#4	10'-5"	☐
u80(E)	6	#5	7'-7"	⊔
v80(E)	60	#5	3'-10"	——
Concrete Structures			Cu. Yd.	8.1
Reinforcement Bars, Epoxy Coated			Pound	880
Structure Excavation			Cu. Yd.	19
Furnishing Metal Shell Piles - 14" X 0.25"			Foot	450
Driving Piles			Foot	450

BILL OF MATERIAL - BENT 14 EB

Bar	No.	Size	Length	Shape
p80(E)	9	#6	28'-10"	——
s80(E)	29	#4	10'-5"	☐
u80(E)	6	#5	7'-7"	⊔
v80(E)	60	#5	3'-10"	——
Concrete Structures			Cu. Yd.	8.1
Reinforcement Bars, Epoxy Coated			Pound	880
Structure Excavation			Cu. Yd.	17
Furnishing Metal Shell Piles - 14" X 0.25"			Foot	375
Driving Piles			Foot	375
Test Pile Metal Shells			Each	1

BILL OF MATERIAL - BENT 15 EB

Bar	No.	Size	Length	Shape
p80(E)	9	#6	28'-10"	——
s80(E)	29	#4	10'-5"	☐
u80(E)	6	#5	7'-7"	⊔
v80(E)	60	#5	3'-10"	——
Concrete Structures			Cu. Yd.	8.1
Reinforcement Bars, Epoxy Coated			Pound	880
Structure Excavation			Cu. Yd.	16
Furnishing Metal Shell Piles - 14" X 0.25"			Foot	450
Driving Piles			Foot	450

BILL OF MATERIAL - BENT 16 EB

Bar	No.	Size	Length	Shape
p80(E)	9	#6	28'-10"	——
s80(E)	29	#4	10'-5"	☐
u80(E)	6	#5	7'-7"	⊔
Concrete Structures			Cu. Yd.	8.1
Reinforcement Bars, Epoxy Coated			Pound	640
Structure Excavation			Cu. Yd.	15
Furnishing Metal Shell Piles - 14" X 0.25"			Foot	450
Driving Piles			Foot	450
Concrete Sealer			Sq. Ft.	249

BILL OF MATERIAL - BENT 17 EB

Bar	No.	Size	Length	Shape
p80(E)	9	#6	28'-10"	——
s80(E)	29	#4	10'-5"	☐
u80(E)	6	#5	7'-7"	⊔
v80(E)	60	#5	3'-10"	——
Concrete Structures			Cu. Yd.	8.1
Reinforcement Bars, Epoxy Coated			Pound	880
Structure Excavation			Cu. Yd.	14
Furnishing Metal Shell Piles - 14" X 0.25"			Foot	354
Driving Piles			Foot	354

BILL OF MATERIAL - BENT 18 EB

Bar	No.	Size	Length	Shape
p80(E)	9	#6	28'-10"	——
s80(E)	29	#4	10'-5"	☐
u80(E)	6	#5	7'-7"	⊔
v80(E)	60	#5	3'-10"	——
Concrete Structures			Cu. Yd.	8.1
Reinforcement Bars, Epoxy Coated			Pound	880
Structure Excavation			Cu. Yd.	14
Furnishing Metal Shell Piles - 14" X 0.25"			Foot	295
Driving Piles			Foot	295
Test Pile Metal Shells			Each	1

BILL OF MATERIAL - BENT 19 EB

Bar	No.	Size	Length	Shape
p80(E)	9	#6	28'-10"	——
s80(E)	29	#4	10'-5"	☐
u80(E)	6	#5	7'-7"	⊔
v80(E)	60	#5	3'-10"	——
Concrete Structures			Cu. Yd.	8.1
Reinforcement Bars, Epoxy Coated			Pound	880
Structure Excavation			Cu. Yd.	13
Furnishing Metal Shell Piles - 14" X 0.25"			Foot	354
Driving Piles			Foot	354

BILL OF MATERIAL - BENT 20 EB

Bar	No.	Size	Length	Shape
p80(E)	9	#6	28'-10"	——
s80(E)	29	#4	10'-5"	☐
u80(E)	6	#5	7'-7"	⊔
v80(E)	60	#5	3'-10"	——
Concrete Structures			Cu. Yd.	8.1
Reinforcement Bars, Epoxy Coated			Pound	880
Structure Excavation			Cu. Yd.	12
Furnishing Metal Shell Piles - 14" X 0.25"			Foot	354
Driving Piles			Foot	354

BILL OF MATERIAL - BENT 21 EB

Bar	No.	Size	Length	Shape
p80(E)	9	#6	28'-10"	——
s80(E)	29	#4	10'-5"	☐
u80(E)	6	#5	7'-7"	⊔
Concrete Structures			Cu. Yd.	8.1
Reinforcement Bars, Epoxy Coated			Pound	640
Structure Excavation			Cu. Yd.	11
Furnishing Metal Shell Piles - 14" X 0.25"			Foot	354
Driving Piles			Foot	354
Concrete Sealer			Sq. Ft.	249

BILL OF MATERIAL - BENT 22 EB

Bar	No.	Size	Length	Shape
p80(E)	9	#6	28'-10"	——
s80(E)	29	#4	10'-5"	☐
u80(E)	6	#5	7'-7"	⊔
v80(E)	60	#5	3'-10"	——
Concrete Structures			Cu. Yd.	8.1
Reinforcement Bars, Epoxy Coated			Pound	880
Structure Excavation			Cu. Yd.	10
Furnishing Metal Shell Piles - 14" X 0.25"			Foot	225
Driving Piles			Foot	225
Test Pile Metal Shells			Each	1

BILL OF MATERIAL - BENT 23 EB

Bar	No.	Size	Length	Shape
p80(E)	9	#6	28'-10"	——
s80(E)	29	#4	10'-5"	☐
u80(E)	6	#5	7'-7"	⊔
v80(E)	60	#5	3'-10"	——
Concrete Structures			Cu. Yd.	8.1
Reinforcement Bars, Epoxy Coated			Pound	880
Structure Excavation			Cu. Yd.	11
Furnishing Metal Shell Piles - 14" X 0.25"			Foot	270
Driving Piles			Foot	270

BILL OF MATERIAL - BENT 24 EB

Bar	No.	Size	Length	Shape
p80(E)	9	#6	28'-10"	——
s80(E)	29	#4	10'-5"	☐
u80(E)	6	#5	7'-7"	⊔
v81(E)	90	#5	4'-11"	⊔
Concrete Structures			Cu. Yd.	8.1
Reinforcement Bars, Epoxy Coated			Pound	1110
Structure Excavation			Cu. Yd.	8
Furnishing Metal Shell Piles - 14" X 0.25"			Foot	270
Driving Piles			Foot	270

T:\5106-USGS\Struct\dgn\Land Bridges\Land Bridge 1 - 016-D010\016D010-60L72-028-BD.dgn

LOCHNER
H. W. LOCHNER, INC.
225 WEST WASHINGTON STREET
12 TH FLOOR
CHICAGO, ILLINOIS 60606

USER NAME =	DESIGNED - LJB	REVISED
FILE NAME = 016D010-60L72-028-BD.dgn	CHECKED - RH	REVISED
PLOT SCALE =	DRAWN - EF	REVISED
PLOT DATE =	CHECKED - RH	REVISED

STATE OF ILLINOIS
DEPARTMENT OF TRANSPORTATION

TYPICAL BENT DETAILS 5
STRUCTURE NO. 016-D010

SHEET NO. 28 OF 47 SHEETS

F.A.P. RTE.	SECTION	COUNTY	TOTAL SHEETS	SHEET NO.
351	2010-081-R	COOK	1045	406
		CONTRACT NO. 60L72		
		ILLINOIS FED. AID PROJECT		

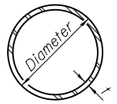

METAL SHELL PILE TABLE

Designation and outside diameter	Wall thickness t	Weight per foot (Lbs./ft.)	Inside volume (yd.^{3}/ft.)
PP12	0.179''	22.60	0.0274
PP12	0.250''	31.37	0.0267
PP14	0.250''	36.71	0.0368
PP14	0.312''	45.61	0.0361

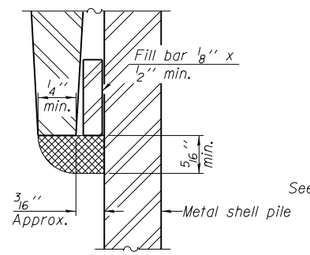

DETAIL A

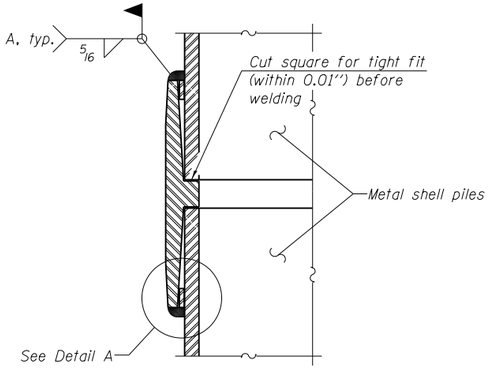

Notes:
The 1/8'' x 1/2'' min. fill bar may be constructed of 2 bars with a 1/8'' max. gap between them.
Pile segments shall be driven to solid contact with splicer before welding.

WELDED COMMERCIAL SPLICE

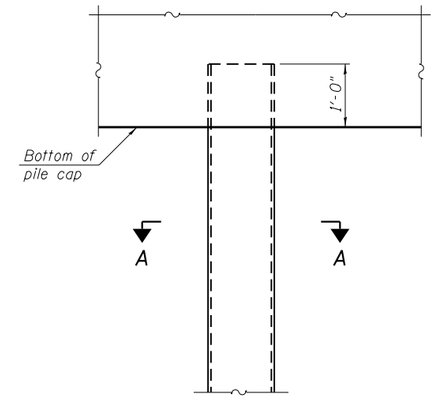

ELEVATION

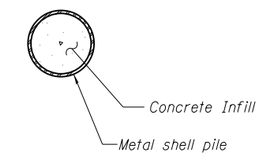

SECTION A-A

METAL SHELL PILE DETAILS AT PIERS

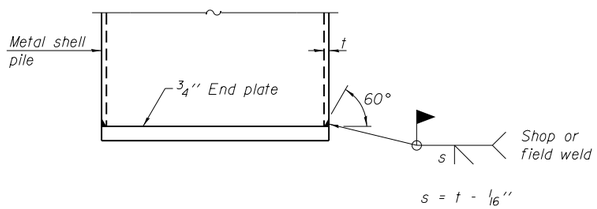

END PLATE ATTACHMENT

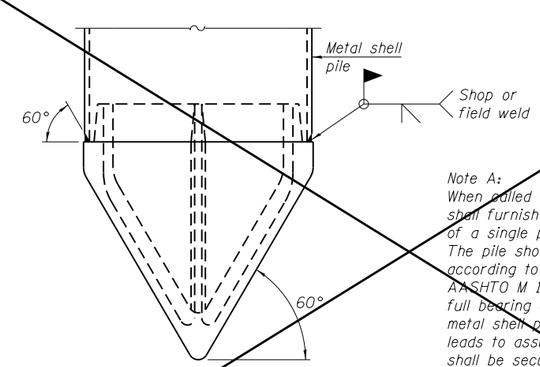

Note A:
When called for on the plans, the Contractor shall furnish metal shell pile shoes consisting of a single piece conical pile point as shown. The pile shoes shall be cast in one piece steel according to either ASTM A 148 Grade 90-60 or AASHTO M 103 Grade 65-35 and shall provide full bearing over the full circumference of the metal shell pile. The pile shoe shall have tapered leads to assure proper alignment and fitting and shall be secured to the pile with a circumferential weld.

METAL SHELL PILE SHOE ATTACHMENT

(See Note A)

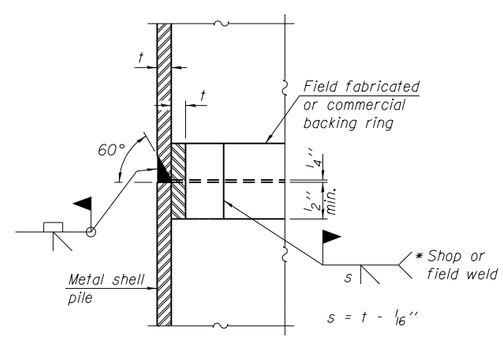

COMPLETE PENETRATION WELD SPLICE

* Field fabricated backing ring may be made from pile shell by removing segment to allow reducing circumference and vertically rejoin with partial joint penetration weld.

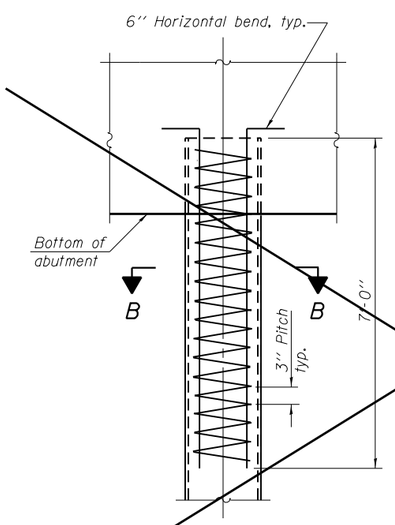

ELEVATION

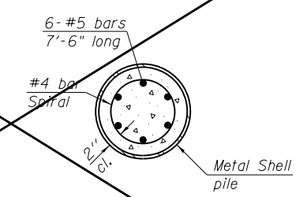

SECTION B-B

METAL SHELL REINFORCEMENT AT ABUTMENTS

Note:
The metal shell piles shall be according to ASTM A 252 Grade 3.

T:\5106-USS\Struct\dgn\Lend Bridges\Lend Bridge 1 - 016-D010\016D010-60L72-029-PD.dgn

Geo Services, Inc.
Geotechnical, Environmental & Civil Engineering
805 Aurora Ct., Suite 204
Naperville, Illinois 60565
(630) 355-0966

SOIL BORING LOG

GSI Job No. 10195
Page 1 of 1
Date 4/25/12

ROUTE IL Route 7/U.S. Route 6 (159th St.) DESCRIPTION IL Rte. 7 from Will Cook Rd. to Ravinia Av. LOGGED BY RR

SECTION 2010-081-R LOCATION SE1/4, SEC. 17, TWP. T36N, RNG. R12E, 3rd PM

COUNTY Cook DRILLING METHOD HAND AUGER HAMMER TYPE

STRUCT. NO. 016-D010
Station
BORING NO. HA-18
Station 371+78
Offset 45.40ft Left
Ground Surface Elev. 688.00 ft

Surface Water Elev. n/a ft
Stream Bed Elev. n/a ft
Groundwater Elev.:
First Encounter 684.0 ft ▼
Upon Completion n/a ft
After ___ Hrs. ___ ft

Description	Elev.	DEPTH (ft)	BLOWS (/6")	UCS Qu (tsf)	MOIST (%)
TOPSOIL-black				2.3 P	25
	685.50				
SILTY CLAY-brown & gray-very stiff				2.0 P	30
	683.00	-5			
CLAY-brown & gray-very stiff				3.5 P	23
	681.00				
CLAY-gray-stiff				1.3 P	23
	680.00				
CLAYEY SAND & GRAVEL-gray					17
	678.00	-10			
End Of Boring @ -10.0'. Boring backfilled with cuttings.		-15			
		-20			

The Unconfined Compressive Strength (UCS) Failure Mode is indicated by (B-Bulge, S-Shear, P-Penetrometer)
The SPT (N value) is the sum of the last two blow values in each sampling zone (AASHTO T206)
BBS, from 137 (Rev. 8-99)

Geo Services, Inc.
Geotechnical, Environmental & Civil Engineering
805 Aurora Ct., Suite 204
Naperville, Illinois 60565
(630) 355-0966

SOIL BORING LOG

GSI Job No. 10195
Page 1 of 1
Date 4/25/12

ROUTE IL Route 7/U.S. Route 6 (159th St.) DESCRIPTION IL Rte. 7 from Will Cook Rd. to Ravinia Av. LOGGED BY RR

SECTION 2010-081-R LOCATION SE1/4, SEC. 17, TWP. T36N, RNG. R12E, 3rd PM

COUNTY Cook DRILLING METHOD HAND AUGER HAMMER TYPE

STRUCT. NO. 016-D010
Station
BORING NO. HA-19
Station 372+47
Offset 41.70ft Left
Ground Surface Elev. 686.80 ft

Surface Water Elev. n/a ft
Stream Bed Elev. n/a ft
Groundwater Elev.:
First Encounter 682.8 ft ▼
Upon Completion n/a ft
After ___ Hrs. ___ ft

Description	Elev.	DEPTH (ft)	BLOWS (/6")	UCS Qu (tsf)	MOIST (%)
TOPSOIL-black					34
	684.30				
CLAY LOAM-brown-very stiff (Fill)				2.5 P	22
	682.80 ▼				
TOPSOIL-black		-5			50
	680.30				
ORGANIC SILTY CLAY-dark brown & gray					46
					43
	676.80	-10			
End Of Boring @ -10.0'. Boring backfilled with cuttings.		-15			
		-20			

The Unconfined Compressive Strength (UCS) Failure Mode is indicated by (B-Bulge, S-Shear, P-Penetrometer)
The SPT (N value) is the sum of the last two blow values in each sampling zone (AASHTO T206)
BBS, from 137 (Rev. 8-99)

Geo Services, Inc.
Geotechnical, Environmental & Civil Engineering
805 Aurora Ct., Suite 204
Naperville, Illinois 60565
(630) 355-0966

SOIL BORING LOG

GSI Job No. 10195
Page 1 of 1
Date 4/25/12

ROUTE IL Route 7/U.S. Route 6 (159th St.) DESCRIPTION IL Rte. 7 from Will Cook Rd. to Ravinia Av. LOGGED BY RR

SECTION 2010-081-R LOCATION SE1/4, SEC. 17, TWP. T36N, RNG. R12E, 3rd PM

COUNTY Cook DRILLING METHOD HAND AUGER HAMMER TYPE

STRUCT. NO. 016-D010
Station
BORING NO. HA-20
Station 373+15
Offset 42.20ft Left
Ground Surface Elev. 686.50 ft

Surface Water Elev. n/a ft
Stream Bed Elev. n/a ft
Groundwater Elev.:
First Encounter 684.5 ft ▼
Upon Completion n/a ft
After ___ Hrs. ___ ft

Description	Elev.	DEPTH (ft)	BLOWS (/6")	UCS Qu (tsf)	MOIST (%)
TOPSOIL-black					71
	684.50 ▼				
CLAY LOAM-dark brown & gray-very stiff (Fill)	684.00				
PEAT-dark brown & black					76
		-5			92
					109
					78
	676.50	-10			
End Of Boring @ -10.0'. Boring backfilled with cuttings.		-15			
		-20			

The Unconfined Compressive Strength (UCS) Failure Mode is indicated by (B-Bulge, S-Shear, P-Penetrometer)
The SPT (N value) is the sum of the last two blow values in each sampling zone (AASHTO T206)
BBS, from 137 (Rev. 8-99)

Z:\PROJECTS\2010\10195 H.W. LOCHNER, IL 7 WILL COOK RD. TO US 45 (PTB 157, 51)\10195 BORINGS LOGS\10195_LOG.GPJ 5/17/12

T:\5106-USGS\Structure\dgn\Land Bridges\Land Bridge 1 - 016-D010\016D010-60L72-030-SB.dgn

LOCHNER	USER NAME =	DESIGNED -	REVISED
H. W. LOCHNER, INC. 225 WEST WASHINGTON STREET 12 TH FLOOR CHICAGO, ILLINOIS 60606	FILE NAME = 016D010-60L72-030-SB.dgn	CHECKED -	REVISED
	PLOT SCALE =	DRAWN - EF	REVISED
	PLOT DATE =	CHECKED - RH	REVISED

STATE OF ILLINOIS
DEPARTMENT OF TRANSPORTATION

SOIL BORINGS 1
STRUCTURE NO. 016–D010
SHEET NO. 30 OF 47 SHEETS

F.A.P. RTE.	SECTION	COUNTY	TOTAL SHEETS	SHEET NO.
351	2010-081-R	COOK	1045	408
		CONTRACT NO. 60L72		
		ILLINOIS FED. AID PROJECT		

Geo Services, Inc.
Geotechnical, Environmental & Civil Engineering
605 Aimwell Court, Suite 204
Naperville, Illinois 60565
(630) 355-0868

GSI Job No. 10195

SOIL BORING LOG

Page 1 of 1

Date 4/25/12

ROUTE IL Route 7/U.S. Route 6 (159th St.) DESCRIPTION IL Rte. 7 from Will Cook Rd. to Ravinia Av. LOGGED BY RR

SECTION 2010-081-R LOCATION SE1/4, SEC. 17, TWP. T36N, RNG. R12E, 3rd PM

COUNTY Cook DRILLING METHOD HAND AUGER HAMMER TYPE

STRUCT. NO. 016-D010
Station
BORING NO. HA-21
Station 373+98
Offset 40.50ft Left
Ground Surface Elev. 685.10 ft

Surface Water Elev. n/a ft
Stream Bed Elev. n/a ft
Groundwater Elev.:
First Encounter 681.1 ft
Upon Completion n/a ft
After ___ Hrs. ___ ft

Description	Elev.	DEPTH (ft)	BLOWS (/6")	UCS Qu (tsf)	MOIST (%)
TOPSOIL-dark brown & black					45
	683.10				
SILTY CLAY-brown & gray-very stiff	682.60				86
PEAT-dark brown & black		-5			446
					270
					267
	675.10	-10			
End Of Boring @ -10.0'. Boring backfilled with cuttings.		-15			
		-20			

The Unconfined Compressive Strength (UCS) Failure Mode is indicated by (B-Bulge, S-Shear, P-Penetrometer)
The SPT (N value) is the sum of the last two blow values in each sampling zone (AASHTO T206)
BBS, from 137 (Rev. 8-99)

Geo Services, Inc.
Geotechnical, Environmental & Civil Engineering
605 Aimwell Court, Suite 204
Naperville, Illinois 60565
(630) 355-0868

GSI Job No. 10195

SOIL BORING LOG

Page 1 of 1

Date 4/19/12

ROUTE IL Route 7/U.S. Route 6 (159th St.) DESCRIPTION IL Rte. 7 from Will Cook Rd. to Ravinia Av. LOGGED BY CH

SECTION 2010-081-R LOCATION SE1/4, SEC. 17, TWP. T36N, RNG. R12E, 3rd PM

COUNTY Cook DRILLING METHOD HAND AUGER HAMMER TYPE

STRUCT. NO. 016-D010
Station
BORING NO. HA-22
Station 377+13
Offset 35.70ft Left
Ground Surface Elev. 682.60 ft

Surface Water Elev. n/a ft
Stream Bed Elev. n/a ft
Groundwater Elev.:
First Encounter 674.6 ft
Upon Completion n/a ft
After ___ Hrs. ___ ft

Description	Elev.	DEPTH (ft)	BLOWS (/6")	UCS Qu (tsf)	MOIST (%)
TOPSOIL-black					33
	679.60			1.8 P	18
CLAY-brown & gray-stiff to hard (Fill)		-5		4.0 P	22
	677.10				
PEAT-dark brown & black					361
					226
	672.60	-10			
End Of Boring @ -10.0'. Boring backfilled with cuttings.		-15			
		-20			

The Unconfined Compressive Strength (UCS) Failure Mode is indicated by (B-Bulge, S-Shear, P-Penetrometer)
The SPT (N value) is the sum of the last two blow values in each sampling zone (AASHTO T206)
BBS, from 137 (Rev. 8-99)

Geo Services, Inc.
Geotechnical, Environmental & Civil Engineering
605 Aimwell Court, Suite 204
Naperville, Illinois 60565
(630) 355-0868

GSI Job No. 10195

SOIL BORING LOG

Page 1 of 1

Date 4/19/12

ROUTE IL Route 7/U.S. Route 6 (159th St.) DESCRIPTION IL Rte. 7 from Will Cook Rd. to Ravinia Av. LOGGED BY CH

SECTION 2010-081-R LOCATION SE1/4, SEC. 17, TWP. T36N, RNG. R12E, 3rd PM

COUNTY Cook DRILLING METHOD HAND AUGER HAMMER TYPE

STRUCT. NO. 016-D010
Station
BORING NO. HA-23
Station 378+14
Offset 34.70ft Left
Ground Surface Elev. 682.50 ft

Surface Water Elev. n/a ft
Stream Bed Elev. n/a ft
Groundwater Elev.:
First Encounter 675.5 ft
Upon Completion n/a ft
After ___ Hrs. ___ ft

Description	Elev.	DEPTH (ft)	BLOWS (/6")	UCS Qu (tsf)	MOIST (%)
TOPSOIL-black					19
	679.50			1.3 P	28
SILTY CLAY-dark brown & gray-stiff (Fill)		-5		1.5 P	21
	677.50				
PEAT-dark brown & black					367
					460
	672.50	-10			
End Of Boring @ -10.0'. Boring backfilled with cuttings.		-15			
		-20			

The Unconfined Compressive Strength (UCS) Failure Mode is indicated by (B-Bulge, S-Shear, P-Penetrometer)
The SPT (N value) is the sum of the last two blow values in each sampling zone (AASHTO T206)
BBS, from 137 (Rev. 8-99)

T:\5106-USE\Struct\dgn\Land Bridges\Land Bridge 1 - 016-D010\016D010-60L72-031-SB.dgn

Z:\PROJECTS\2010\10195 H.W.LOCHNER, IL 7 WILL COOK RD. TO US 45 (FTB 157, 5)\10195 BORING LOGS\10195_LOG.GPJ, 8/17/12

Geo Services, Inc.
Geotechnical, Environmental & Civil Engineering
805 Aimhurst Court, Suite 204
Naperville, Illinois 60565
(630) 355-7886

GSI Job No. 10195

SOIL BORING LOG

Page 1 of 1

Date 4/19/12

ROUTE IL Route 7/U.S. Route 6 (159th St.) DESCRIPTION IL Rte. 7 from Will Cook Rd. to Ravinia Av. LOGGED BY CH

SECTION 2010-081-R LOCATION SE1/4, SEC. 17, TWP. T36N, RNG. R12E, 3rd PM

COUNTY Cook DRILLING METHOD HAND AUGER HAMMER TYPE

STRUCT. NO. 016-D010
Station

BORING NO. HA-24
Station 379+14
Offset 36.20ft Left
Ground Surface Elev. 682.10 ft

Surface Water Elev. n/a ft
Stream Bed Elev. n/a ft

Groundwater Elev.:
First Encounter 674.1 ft ▼
Upon Completion n/a ft
After ____ Hrs. ____ ft

Description	Elev.	DEPTH (ft)	BLOWS (/6")	UCS Qu (tsf)	MOIST (%)
TOPSOIL-black (Fill)	681.10				
CLAY LOAM-dark brown-stiff (Fill)				1.5 P	21
	679.10			0.5 P	64
ORGANIC SILTY CLAY-black (Fill)	677.60				
CLAY-brown & gray-very stiff (Fill)		-5		2.3 P	24
	675.60				
PEAT-dark brown & black				0.3 P	117
					435
	672.10	-10			
End Of Boring @ -10.0'. Boring backfilled with cuttings.		-15			
		-20			

The Unconfined Compressive Strength (UCS) Failure Mode is indicated by (B-Bulge, S-Shear, P-Penetrometer)
The SPT (N value) is the sum of the last two blow values in each sampling zone (AASHTO T206)

BBS, from 137 (Rev. 8-99)

Z:\PROJECTS\2010\10195\11\W LOCHNER, IL 7 WILL COOK RD. TO US 45 (PTB 157, SJ\10195 BORINGS LOGS\10195_LOG.GPJ 9/7/12

Geo Services, Inc.
Geotechnical, Environmental & Civil Engineering
805 Aimhurst Court, Suite 204
Naperville, Illinois 60565
(630) 355-7886

GSI Job No. 10195

SOIL BORING LOG

Page 1 of 1

Date 4/19/12

ROUTE IL Route 7/U.S. Route 6 (159th St.) DESCRIPTION IL Rte. 7 from Will Cook Rd. to Ravinia Av. LOGGED BY CH

SECTION 2010-081-R LOCATION SE1/4, SEC. 17, TWP. T36N, RNG. R12E, 3rd PM

COUNTY Cook DRILLING METHOD HAND AUGER HAMMER TYPE

STRUCT. NO. 016-D010
Station

BORING NO. HA-25
Station 380+13
Offset 36.10ft Left
Ground Surface Elev. 682.70 ft

Surface Water Elev. n/a ft
Stream Bed Elev. n/a ft

Groundwater Elev.:
First Encounter Dry ft
Upon Completion n/a ft
After ____ Hrs. ____ ft

Description	Elev.	DEPTH (ft)	BLOWS (/6")	UCS Qu (tsf)	MOIST (%)
TOPSOIL-black	681.20			1.8 P	32
CLAY-brown & gray-very stiff to hard				4.5 P	22
		-5		3.3 P	19
	675.20			4.0 P	21
CLAY-gray-stiff				1.8 P	21
	672.70	-10			
End Of Boring @ -10.0'. Boring backfilled with cuttings.		-15			
		-20			

The Unconfined Compressive Strength (UCS) Failure Mode is indicated by (B-Bulge, S-Shear, P-Penetrometer)
The SPT (N value) is the sum of the last two blow values in each sampling zone (AASHTO T206)

BBS, from 137 (Rev. 8-99)

Z:\PROJECTS\2010\10195\11\W LOCHNER, IL 7 WILL COOK RD. TO US 45 (PTB 157, SJ\10195 BORINGS LOGS\10195_LOG.GPJ 9/7/12

T:\5106-USGS\Struct\dgn\Land Bridges\Land Bridge 1 - 016-D010\016D010-60L72-032-SB.dgn

Geo Services, Inc.
Geotechnical, Environmental & Civil Engineering
805 Ammersil Court, Suite 204
Naperville, Illinois 60565
(630) 355-3868

SOIL BORING LOG

GSI Job No. 10195
Page 1 of 2
Date 3/15/12

ROUTE IL Route 7/U.S. Route 6 (159th St.) DESCRIPTION IL Rte. 7 from Will Cook Rd. to Ravinia Av. LOGGED BY TZ

SECTION 2010-081-R LOCATION SE1/4, SEC. 17, TWP. T36N, RNG. R12E, 3rd PM

COUNTY Cook DRILLING METHOD HSA/ROTARY HAMMER TYPE CME Automatic

STRUCT. NO. 016-D010
Station
BORING NO. RW-02
Station 371+76
Offset 25.00ft Left
Ground Surface Elev. 693.40 ft

Surface Water Elev. n/a ft
Stream Bed Elev. n/a ft
Groundwater Elev.:
First Encounter Dry to 10' ft
Upon Completion n/a ft
After ___ Hrs. ___ ft

Description	Elev.	DEPTH (ft)	BLOWS (/6")	UCS Qu (tsf)	MOIST (%)
SAND, GRAVEL & STONE (Fill)	692.40				3
CLAY-brown, gray & black-medium stiff to very stiff (Fill)			3		
			4 5	3.3 B	19
			3		
			3 3	1.1 B	29
		-5			
			3		
			4 6	2.5 P	31
			2		
			2 4	0.8 P	34
		-10			
CLAY-brown & gray-stiff	682.90		3		
			4 5	1.5 B	24
becoming gray @ -13.0'			2		
			2 4		32
		-15			
SANDY LOAM-gray-loose	677.90		2		
			3 4		19
CLAY LOAM-gray-soft to stiff	675.40		2		
		-20	2 2	0.6 B	21
CLAY LOAM-gray-soft to stiff *(continued)*			2		
			4 6	1.2 B	13
			2		
			3 4	1.1 B	13
		-30			
			3		
			3 4	1.0 B	12
		-35			
			3		
			4 6	1.3 B	13
		-40			

The Unconfined Compressive Strength (UCS) Failure Mode is indicated by (B-Bulge, S-Shear, P-Penetrometer)
The SPT (N value) is the sum of the last two blow values in each sampling zone (AASHTO T206)
BBS, from 137 (Rev. 8-99)

Z:\PROJECTS\2010\10195 H.W. LOCHNER, IL-7 WILL COOK RD. TO US 45 (FTB 157, 5)\10195 BORING LOGS\10195_LOG.GPJ 9/17/12

Geo Services, Inc.
Geotechnical, Environmental & Civil Engineering
805 Ammersil Court, Suite 204
Naperville, Illinois 60565
(630) 355-3868

SOIL BORING LOG

GSI Job No. 10195
Page 2 of 2
Date 3/15/12

ROUTE IL Route 7/U.S. Route 6 (159th St.) DESCRIPTION IL Rte. 7 from Will Cook Rd. to Ravinia Av. LOGGED BY TZ

SECTION 2010-081-R LOCATION SE1/4, SEC. 17, TWP. T36N, RNG. R12E, 3rd PM

COUNTY Cook DRILLING METHOD HSA/ROTARY HAMMER TYPE CME Automatic

STRUCT. NO. 016-D010
Station
BORING NO. RW-02
Station 371+76
Offset 25.00ft Left
Ground Surface Elev. 693.40 ft

Surface Water Elev. n/a ft
Stream Bed Elev. n/a ft
Groundwater Elev.:
First Encounter Dry to 10' ft
Upon Completion n/a ft
After ___ Hrs. ___ ft

Description	Elev.	DEPTH (ft)	BLOWS (/6")	UCS Qu (tsf)	MOIST (%)
CLAY LOAM-gray-soft to stiff *(continued)*			5		
			7 8	1.8 B	21
		-45			
SILTY SAND-gray-medium dense	646.40		9		
			10 12		18
End Of Boring @ -50.0'. Boring backfilled with cuttings.	643.40	-50			
		-55			
		-60			

The Unconfined Compressive Strength (UCS) Failure Mode is indicated by (B-Bulge, S-Shear, P-Penetrometer)
The SPT (N value) is the sum of the last two blow values in each sampling zone (AASHTO T206)
BBS, from 137 (Rev. 8-99)

Z:\PROJECTS\2010\10195 H.W. LOCHNER, IL-7 WILL COOK RD. TO US 45 (FTB 157, 5)\10195 BORING LOGS\10195_LOG.GPJ 9/17/12

T:\5106-USE\Struct\dgn\Land Bridges\Land Bridge 1 - 016-D010\016D010-60L72-033-SB.dgn

Geo Services, Inc.
Geotechnical, Environmental & Civil Engineering
805 Armhurst Court, Suite 204
Naperville, Illinois 60565
(630) 305-7956

SOIL BORING LOG

GSI Job No. 10195
Page 1 of 2
Date 3/15/12

ROUTE IL Route 7/U.S. Route 6 (159th St.) DESCRIPTION IL Rte. 7 from Will Cook Rd. to Ravinia Av. LOGGED BY TZ

SECTION 2010-081-R LOCATION SE1/4, SEC. 17, TWP. T36N, RNG. R12E, 3rd PM

COUNTY Cook DRILLING METHOD HSA/ROTARY HAMMER TYPE CME Automatic

STRUCT. NO. 016-D010
Station

BORING NO. RW-03
Station 372+48
Offset 23.90ft Left
Ground Surface Elev. 692.40 ft

Surface Water Elev. n/a ft
Stream Bed Elev. n/a ft

Groundwater Elev.:
First Encounter Dry to 10 ft
Upon Completion n/a ft
After ___ Hrs. ___ ft

Description	Elev.	DEPTH (ft)	BLOWS (/6")	UCS Qu (tsf)	MOIST (%)
SAND, GRAVEL & STONE (Fill)	691.40				6
CLAY LOAM-dark brown & gray-stiff to hard (Fill)			3		
			4	4.5	17
			5	P	
			2		
		-5	3	1.3	29
			4	B	
TOPSOIL-black	686.90				
			2		
			2	2.0	30
			3	P	
ORGANIC SILTY CLAY-dark brown & gray-very loose	684.40				
			ST		50
		-10			
			0		
			0	0.5	57
			0	B	
			0		
			0	0.2	33
		-15	1	B	
CLAY-gray-stiff to very stiff	676.90				
			3		
			4	1.7	22
			5	B	
			4		
		-20	5	1.3	21
			6	B	
CLAY-gray-stiff to very stiff *(continued)*					
			4		
			4	2.3	19
			7	B	
			3		
		-25	5	2.1	21
			6	B	
SAND with GRAVEL-gray-loose	666.90				
			5		
			4		15
			3		
			5		
		-30	3		10
			3		
CLAY-gray-very stiff	660.40				
			4		
		-35	4	2.5	15
			6	B	
CLAYEY SAND & GRAVEL-gray-loose	655.40				
			3		
		-40	3		17
			4		

The Unconfined Compressive Strength (UCS) Failure Mode is indicated by (B-Bulge, S-Shear, P-Penetrometer)
The SPT (N value) is the sum of the last two blow values in each sampling zone (AASHTO T206)

BBS, from 137 (Rev. 8-99)

Z:\PROJECTS\2010\10195 H.W.LOCHNER, IL 7 WILL COOK RD. TO US 45 (RTE 157, 51\10195 BORING LOGS\10195_LOG.GPJ 9/17/12

Geo Services, Inc.
Geotechnical, Environmental & Civil Engineering
805 Armhurst Court, Suite 204
Naperville, Illinois 60565
(630) 305-7956

SOIL BORING LOG

GSI Job No. 10195
Page 2 of 2
Date 3/15/12

ROUTE IL Route 7/U.S. Route 6 (159th St.) DESCRIPTION IL Rte. 7 from Will Cook Rd. to Ravinia Av. LOGGED BY TZ

SECTION 2010-081-R LOCATION SE1/4, SEC. 17, TWP. T36N, RNG. R12E, 3rd PM

COUNTY Cook DRILLING METHOD HSA/ROTARY HAMMER TYPE CME Automatic

STRUCT. NO. 016-D010
Station

BORING NO. RW-03
Station 372+48
Offset 23.90ft Left
Ground Surface Elev. 692.40 ft

Surface Water Elev. n/a ft
Stream Bed Elev. n/a ft

Groundwater Elev.:
First Encounter Dry to 10' ft
Upon Completion n/a ft
After ___ Hrs. ___ ft

Description	Elev.	DEPTH (ft)	BLOWS (/6")	UCS Qu (tsf)	MOIST (%)
CLAYEY SAND & GRAVEL-gray-loose *(continued)*	650.40				
CLAY-gray-stiff to very stiff			5		
			7	1.5	15
		-45	12	P	
			5		
			9	2.3	23
	642.40	-50	15	B	
End Of Boring @ -50.0'. Boring backfilled with cuttings.					
		-55			
		-60			

The Unconfined Compressive Strength (UCS) Failure Mode is indicated by (B-Bulge, S-Shear, P-Penetrometer)
The SPT (N value) is the sum of the last two blow values in each sampling zone (AASHTO T206)

BBS, from 137 (Rev. 8-99)

Z:\PROJECTS\2010\10195 H.W.LOCHNER, IL 7 WILL COOK RD. TO US 45 (RTE 157, 51\10195 BORING LOGS\10195_LOG.GPJ 9/17/12

T:\5106-USB\Struct\dgn\Land Bridges\Land Bridge 1 - 016-D010\016D010-60L72-034-SB.dgn

Geo Services, Inc.
Geotechnical, Environmental & Civil Engineering
805 Admiral Court, Suite 204
Naperville, Illinois 60565
(630) 355-7586

SOIL BORING LOG

GSI Job No. 10195
Page 1 of 2
Date 3/15/12

ROUTE IL Route 7/U.S. Route 6 (159th St.) DESCRIPTION IL Rte. 7 from Will Cook Rd. to Ravinia Av. LOGGED BY RR

SECTION 2010-081-R LOCATION SE1/4, SEC. 17, TWP. T36N, RNG. R12E, 3rd PM

COUNTY Cook DRILLING METHOD HSA/ROTARY HAMMER TYPE CME Automatic

STRUCT. NO. 016-D010
Station
BORING NO. RW-04
Station 373+18
Offset 24.20ft Left
Ground Surface Elev. 691.00 ft

Surface Water Elev. n/a ft
Stream Bed Elev. n/a ft
Groundwater Elev.:
First Encounter Dry to 10' ft
Upon Completion n/a ft
After ___ Hrs. ___ ft

Description	Elev.	DEPTH (ft)	BLOWS (/6")	UCS Qu (tsf)	MOIST (%)
ASPHALT	690.20				
SANDY CLAY-dark brown & black-loose (Fill)			4		
			3	1.5	11
			4	P	
			3		
			3	1.7	21
	686.00	-5	4	B	
TOPSOIL-black					
			3		
			3	1.0	32
			6	P	
			2		
			3	1.8	39
		-10	4	P	
	680.50				
PEAT-dark brown-very loose			0		
			0	0.5	82
			0	B	
	678.00				
ORGANIC SILTY CLAY-dark gray-very loose			0		
			0	0.5	57
		-15	0	B	
			1		
			1	0.3	36
			1	P	
	673.00				
CLAY-gray-stiff			1		
			1	1.8	22
		-20	3	P	
CLAY-gray-stiff *(continued)*	670.50				
SILTY CLAY LOAM-gray-medium stiff			2		
			2	0.8	18
			3	P	
	668.00				
CLAY-gray-medium stiff to very stiff			7		
			5	1.4	22
		-25	6	B	
			6		
			8	3.0	20
			13	B	
			5		
			6	2.1	21
		-30	8	B	
			6		
			6	2.0	30
		-35	8	P	
			5		
			6	0.8	18
		-40	9	B	

The Unconfined Compressive Strength (UCS) Failure Mode is indicated by (B-Bulge, S-Shear, P-Penetrometer)
The SPT (N value) is the sum of the last two blow values in each sampling zone (AASHTO T206)

BBS, from 137 (Rev. 8-99)

Geo Services, Inc.
Geotechnical, Environmental & Civil Engineering
805 Admiral Court, Suite 204
Naperville, Illinois 60565
(630) 355-7586

SOIL BORING LOG

GSI Job No. 10195
Page 2 of 2
Date 3/15/12

ROUTE IL Route 7/U.S. Route 6 (159th St.) DESCRIPTION IL Rte. 7 from Will Cook Rd. to Ravinia Av. LOGGED BY RR

SECTION 2010-081-R LOCATION SE1/4, SEC. 17, TWP. T36N, RNG. R12E, 3rd PM

COUNTY Cook DRILLING METHOD HSA/ROTARY HAMMER TYPE CME Automatic

STRUCT. NO. 016-D010
Station
BORING NO. RW-04
Station 373+18
Offset 24.20ft Left
Ground Surface Elev. 691.00 ft

Surface Water Elev. n/a ft
Stream Bed Elev. n/a ft
Groundwater Elev.:
First Encounter Dry to 10' ft
Upon Completion n/a ft
After ___ Hrs. ___ ft

Description	Elev.	DEPTH (ft)	BLOWS (/6")	UCS Qu (tsf)	MOIST (%)
CLAY-gray-medium stiff to very stiff *(continued)*			6		
			9	3.4	14
		-45	11	B	
	644.00				
SANDY LOAM-gray-medium dense			14		
			16		13
	641.00	-50	10		
End Of Boring @ -50.0'. Boring backfilled with cuttings.		-55			
		-60			

The Unconfined Compressive Strength (UCS) Failure Mode is indicated by (B-Bulge, S-Shear, P-Penetrometer)
The SPT (N value) is the sum of the last two blow values in each sampling zone (AASHTO T206)

BBS, from 137 (Rev. 8-99)

T:\5106-USB\Struct\dgn\Land Bridges\Land Bridge 1 - 016-D010\016D010-60L72-035-SB.dgn

Z:\PROJECTS\2010\10195\H:\V\LOCHNER\IL 7 WILL COOK RD. TO US 45 (PTB 157, 5)\10195 BORING LOGS\10195_LOG.GPJ 3/17/12

LOCHNER
H. W. LOCHNER, INC.
225 WEST WASHINGTON STREET
12 TH FLOOR
CHICAGO, ILLINOIS 60606

USER NAME =	DESIGNED -	REVISED
FILE NAME = 016D010-60L72-035-SB.dgn	CHECKED -	REVISED
PLOT SCALE =	DRAWN - EF	REVISED
PLOT DATE =	CHECKED - RH	REVISED

STATE OF ILLINOIS
DEPARTMENT OF TRANSPORTATION

SOIL BORINGS 6
STRUCTURE NO. 016–D010
SHEET NO. 35 OF 47 SHEETS

F.A.P. RTE.	SECTION	COUNTY	TOTAL SHEETS	SHEET NO.
351	2010-081-R	COOK	1045	413

CONTRACT NO. 60L72
ILLINOIS FED. AID PROJECT

Geo Services, Inc.
Geotechnical, Environmental & Civil Engineering
805 Armhurst Court, Suite 204
Naperville, Illinois 60565
(630) 355-5566

SOIL BORING LOG

GSI Job No. 10195
Page 1 of 2
Date 3/15/12

ROUTE IL Route 7/U.S. Route 6 (159th St.) DESCRIPTION IL Rte. 7 from Will Cook Rd. to Ravinia Av. LOGGED BY RR

SECTION 2010-081-R LOCATION SE1/4, SEC. 17, TWP. T36N, RNG. R12E, 3rd PM

COUNTY Cook DRILLING METHOD HSA/ROTARY HAMMER TYPE CME Automatic

STRUCT. NO. 016-D010
Station
BORING NO. RW-05
Station 373+90
Offset 24.50ft Left
Ground Surface Elev. 688.50 ft

Surface Water Elev. n/a ft
Stream Bed Elev. n/a ft
Groundwater Elev.:
First Encounter Dry to 10 ft
Upon Completion n/a ft
After ___ Hrs. ___ ft

Description	Elev.	DEPTH (ft)	BLOWS (/6")	UCS Qu (tsf)	MOIST (%)
SAND & GRAVEL	687.75				5
TOPSOIL-black			6		
			4	1.8	28
			3	P	
SILTY CLAY-dark brown & gray-medium stiff to very stiff (Wet) Fill	685.50		2		
			3	0.7	25
		-5	5	B	
			3		
			5	2.0	29
			6	P	
PEAT-dark brown to black-very loose	680.50		3		
			2		71
		-10	2		
			ST		
					123
			1		
			1	0.3	119
		-15	1	P	
			0		
			1	0.5	127
			1	P	
ORGANIC SILTY CLAY-dark brown & gray-very loose	670.50		0		
			0	0.2	44
		-20	0	B	
ORGANIC SILTY CLAY-dark brown & gray-very loose *(continued)*			0		
			0	0.3	42
			0	P	
SILTY CLAY LOAM-gray-very loose	665.50		1		
			1	0.2	27
		-25	1	B	
CLAY-gray-stiff to very stiff	663.00		3		
			3	1.0	26
			8	P	
			5		
			6	2.9	21
		-30	11	B	
SANDY LOAM-gray-medium dense	656.50		5		
			7		19
		-35	8		
CLAY-gray-very stiff	651.50		4		
			7	3.2	17
		-40	11	B	

The Unconfined Compressive Strength (UCS) Failure Mode is indicated by (B-Bulge, S-Shear, P-Penetrometer)
The SPT (N value) is the sum of the last two blow values in each sampling zone (AASHTO T206)

BBS, from 137 (Rev. 8-99)

Z:\PROJECTS\2010\10195\LOCHNER, IL 7 WILL COOK RD. TO US 45 (PTB 157, 51\10195 BORING LOGS\10195_LOG.GPJ 8\7\12

Geo Services, Inc.
Geotechnical, Environmental & Civil Engineering
805 Armhurst Court, Suite 204
Naperville, Illinois 60565
(630) 355-5566

SOIL BORING LOG

GSI Job No. 10195
Page 2 of 2
Date 3/15/12

ROUTE IL Route 7/U.S. Route 6 (159th St.) DESCRIPTION IL Rte. 7 from Will Cook Rd. to Ravinia Av. LOGGED BY RR

SECTION 2010-081-R LOCATION SE1/4, SEC. 17, TWP. T36N, RNG. R12E, 3rd PM

COUNTY Cook DRILLING METHOD HSA/ROTARY HAMMER TYPE CME Automatic

STRUCT. NO. 016-D010
Station
BORING NO. RW-05
Station 373+90
Offset 24.50ft Left
Ground Surface Elev. 688.50 ft

Surface Water Elev. n/a ft
Stream Bed Elev. n/a ft
Groundwater Elev.:
First Encounter Dry to 10' ft
Upon Completion n/a ft
After ___ Hrs. ___ ft

Description	Elev.	DEPTH (ft)	BLOWS (/6")	UCS Qu (tsf)	MOIST (%)
CLAY-gray-very stiff *(continued)*	646.50				
SILTY LOAM-gray-medium dense			6		
			6		21
		-45	6		
CLAY LOAM-gray-very stiff	641.50		8		
			8	2.5	13
	638.50	-50	9	P	
End Of Boring @ -50.0'. Boring backfilled with cuttings.		-55			
		-60			

The Unconfined Compressive Strength (UCS) Failure Mode is indicated by (B-Bulge, S-Shear, P-Penetrometer)
The SPT (N value) is the sum of the last two blow values in each sampling zone (AASHTO T206)

BBS, from 137 (Rev. 8-99)

Z:\PROJECTS\2010\10195\LOCHNER, IL 7 WILL COOK RD. TO US 45 (PTB 157, 51\10195 BORING LOGS\10195_LOG.GPJ 8\7\12

T:\5106-USS\Struct\dgn\Land Bridges\Land Bridge 1 - 016-D010\016D010-60L72-036-SB.dgn

LOCHNER	USER NAME =	DESIGNED -	REVISED	STATE OF ILLINOIS DEPARTMENT OF TRANSPORTATION	SOIL BORINGS 7 STRUCTURE NO. 016–D010	F.A.P. RTE.	SECTION	COUNTY	TOTAL SHEETS	SHEET NO.
H. W. LOCHNER, INC. 225 WEST WASHINGTON STREET 12 TH FLOOR CHICAGO, ILLINOIS 60606	FILE NAME = 016D010-60L72-036-SB.dgn	CHECKED -	REVISED			351	2010-081-R	COOK	1045	414
	PLOT SCALE =	DRAWN - EF	REVISED			CONTRACT NO. 60L72				
	PLOT DATE =	CHECKED - RH	REVISED		SHEET NO. 36 OF 47 SHEETS	ILLINOIS FED. AID PROJECT				

Geo Services, Inc.
Geotechnical, Environmental & Civil Engineering
805 Aimwell Court, Suite 204
Naperville, Illinois 60565
(630) 355-3586

SOIL BORING LOG

GSI Job No. 10195
Page 1 of 2
Date 3/12/12

ROUTE IL Route 7/U.S. Route 6 (159th St.) DESCRIPTION IL Rte. 7 from Will Cook Rd. to Ravinia Av. LOGGED BY RR

SECTION 2010-081-R LOCATION SE1/4, SEC. 17, TWP. T36N, RNG. R12E, 3rd PM

COUNTY Cook DRILLING METHOD HSA/ROTARY HAMMER TYPE CME Automatic

STRUCT. NO. 016-D010
Station
BORING NO. SB-01
Station 374+80
Offset 13.70ft Right
Ground Surface Elev. 687.60 ft

Surface Water Elev. n/a ft
Stream Bed Elev. n/a ft
Groundwater Elev.:
First Encounter Dry to 10' ft
Upon Completion n/a ft
After ___ Hrs. ___ ft

Description	Elev.	DEPTH (ft)	BLOWS (/6")	UCS Qu (tsf)	MOIST (%)
SAND, GRAVEL & STONE	686.60				6
CLAY-dark brown & gray-hard (Fill)			3		
			5	4.5	19
			7	P	
ORGANIC SILTY CLAY-brown & gray-loose	684.60				
			2		
			2	1.3	45
		-5	3	P	
			3		
			2	0.6	61
			2	B	
CLAY-gray-soft to stiff	679.60				
			2		
			2	0.8	25
		-10	3	B	
			3		
			5	0.9	24
			5	B	
			1		
			1	0.5	26
		-15	3	P	
			4		
			5	0.8	16
			6	B	
			2		
			3	0.3	17
		-20	4	P	

Description	Elev.	DEPTH (ft)	BLOWS (/6")	UCS Qu (tsf)	MOIST (%)
CLAY-gray-soft to stiff *(continued)*					
			2		
			4	0.8	17
			5	B	
			2		
		-25	3	1.4	16
			6	B	
			5		
			7	1.3	17
			9	B	
			3		
			5	1.4	15
		-30	7	B	
CLAYEY SAND & GRAVEL-gray-medium dense	655.60				
			8		
			9		10
		-35	18		
CLAY-gray-stiff to hard	650.60				
			4		
			5	1.0	29
		-40	7	P	

The Unconfined Compressive Strength (UCS) Failure Mode is indicated by (B-Bulge, S-Shear, P-Penetrometer)
The SPT (N value) is the sum of the last two blow values in each sampling zone (AASHTO T206)

BBS, from 137 (Rev. 8-99)

Z:\PROJECTS\2010\10195 H.W.LOCHNER, IL-7 WILL COOK RD. TO US 45 (FTB 157, 5\10195 BORING LOGS\10195_LOG.GPJ 8/17/12

Geo Services, Inc.
Geotechnical, Environmental & Civil Engineering
805 Aimwell Court, Suite 204
Naperville, Illinois 60565
(630) 355-3586

SOIL BORING LOG

GSI Job No. 10195
Page 2 of 2
Date 3/12/12

ROUTE IL Route 7/U.S. Route 6 (159th St.) DESCRIPTION IL Rte. 7 from Will Cook Rd. to Ravinia Av. LOGGED BY RR

SECTION 2010-081-R LOCATION SE1/4, SEC. 17, TWP. T36N, RNG. R12E, 3rd PM

COUNTY Cook DRILLING METHOD HSA/ROTARY HAMMER TYPE CME Automatic

STRUCT. NO. 016-D010
Station
BORING NO. SB-01
Station 374+80
Offset 13.70ft Right
Ground Surface Elev. 687.60 ft

Surface Water Elev. n/a ft
Stream Bed Elev. n/a ft
Groundwater Elev.:
First Encounter Dry to 10' ft
Upon Completion n/a ft
After ___ Hrs. ___ ft

Description	Elev.	DEPTH (ft)	BLOWS (/6")	UCS Qu (tsf)	MOIST (%)
CLAY-gray-stiff to hard *(continued)*					
			3		
			3	1.3	14
		-45	4	P	
			3		
			7	1.0	11
		-50	10	P	
			7		
			9	2.2	21
		-55	11	B	
			6		
			5	1.7	18
		-60	6	B	
CLAY-gray-stiff to hard *(continued)*					
			5		
			6	4.2	20
		-65	7	B	
			3		
			15		
			5	2.0	19
		-70	6	P	
SAND & GRAVEL-gray-medium dense	615.60				
			8		
			10		9
	612.60	-75	13		
End Of Boring @ -75.0'. Boring backfilled with cuttings.					
		-80			

The Unconfined Compressive Strength (UCS) Failure Mode is indicated by (B-Bulge, S-Shear, P-Penetrometer)
The SPT (N value) is the sum of the last two blow values in each sampling zone (AASHTO T206)

BBS, from 137 (Rev. 8-99)

Z:\PROJECTS\2010\10195 H.W.LOCHNER, IL-7 WILL COOK RD. TO US 45 (FTB 157, 5\10195 BORING LOGS\10195_LOG.GPJ 8/17/12

T:\5106-USES\Struct\dgn\Land Bridges\Land Bridge 1 - 016-D010\016D010-60L72-037-SB.dgn

Geo Services, Inc.
Geotechnical, Environmental & Civil Engineering
805 Aintree Court, Suite 204
Naperville, Illinois 60565
(630) 355-7868

SOIL BORING LOG

GSI Job No. 10195
Page 1 of 2
Date 3/7/12

ROUTE IL Route 7/U.S. Route 6 (159th St.) DESCRIPTION IL Rte. 7 from Will Cook Rd. to Ravinia Av. LOGGED BY JZ

SECTION 2010-081-R LOCATION SE1/4, SEC. 17, TWP. T36N, RNG. R12E, 3rd PM

COUNTY Cook DRILLING METHOD HSA/ROTARY HAMMER TYPE CME Automatic

STRUCT. NO. 016-D010
Station
BORING NO. SB-02
Station 375+23
Offset 18.10ft Left
Ground Surface Elev. 687.20 ft

Surface Water Elev. n/a ft
Stream Bed Elev. n/a ft
Groundwater Elev.:
First Encounter Dry to 10 ft
Upon Completion n/a ft
After ___ Hrs. ___ ft

Description	Elev.	DEPTH (ft)	BLOWS (/6")	UCS Qu (tsf)	MOIST (%)
CRUSHED ASPHALT & STONE	686.80				
CLAY LOAM-dark brown, gray & black-very stiff (Fill)			5		
			4	2.0	20
			3	P	
			2		
			4	2.1	22
		-5	5	B	
SILTY CLAY-dark gray to black-very stiff (Wet)	681.70		3		
			4	2.0	31
			5	P	
PEAT-dark brown & black-very loose	679.20		1		
			1		115
		-10	1		
			0		
			0		514
			0		
			0		
			0		180
		-15	0		
			0		
			0		123
			0		
			0		
			0		104
		-20	0		
ORGANIC SILTY CLAY-dark gray-very loose	666.70		0		
			0		54
			0		
			0		47
		-25	0		
			0		57
			0		
SILTY CLAY LOAM-gray-very loose (Wet)	659.20		0		
			0	<0.25	25
		-30	0	P	
CLAY-gray-stiff to very stiff	655.20		5		
			7	1.0	22
		-35	9	P	
			8		
			11	1.5	20
		-40	13	B	

The Unconfined Compressive Strength (UCS) Failure Mode is indicated by (B-Bulge, S-Shear, P-Penetrometer)
The SPT (N value) is the sum of the last two blow values in each sampling zone (AASHTO T206)
BBS, from 137 (Rev. 8-99)

Geo Services, Inc.
Geotechnical, Environmental & Civil Engineering
805 Aintree Court, Suite 204
Naperville, Illinois 60565
(630) 355-7868

SOIL BORING LOG

GSI Job No. 10195
Page 2 of 2
Date 3/7/12

ROUTE IL Route 7/U.S. Route 6 (159th St.) DESCRIPTION IL Rte. 7 from Will Cook Rd. to Ravinia Av. LOGGED BY JZ

SECTION 2010-081-R LOCATION SE1/4, SEC. 17, TWP. T36N, RNG. R12E, 3rd PM

COUNTY Cook DRILLING METHOD HSA/ROTARY HAMMER TYPE CME Automatic

STRUCT. NO. 016-D010
Station
BORING NO. SB-02
Station 375+23
Offset 18.10ft Left
Ground Surface Elev. 687.20 ft

Surface Water Elev. n/a ft
Stream Bed Elev. n/a ft
Groundwater Elev.:
First Encounter Dry to 10' ft
Upon Completion n/a ft
After ___ Hrs. ___ ft

Description	Elev.	DEPTH (ft)	BLOWS (/6")	UCS Qu (tsf)	MOIST (%)
CLAY-gray-stiff to very stiff *(continued)*			6		
			11	3.4	20
		-45	14	B	
			6		
			7	1.0	28
		-50	10	B	
			5		
			7	1.2	31
		-55	9	B	
			5		
			6	1.0	17
		-60	8	B	
CLAY-gray-stiff to very stiff *(continued)*			4		
			5	1.0	13
		-65	7	B	
	625.20				
CLAY LOAM-gray-stiff to very stiff			5		
			8	2.0	18
		-70	13	B	
			6		
			9	1.9	13
	612.20	-75	13	B	
End Of Boring @ -75.0'. Boring backfilled with cuttings.		-80			

The Unconfined Compressive Strength (UCS) Failure Mode is indicated by (B-Bulge, S-Shear, P-Penetrometer)
The SPT (N value) is the sum of the last two blow values in each sampling zone (AASHTO T206)
BBS, from 137 (Rev. 8-99)

T:\5106-US6\Struct\dgn\Land Bridges\Land Bridge 1 - 016-D010\016D010-60L72-038-SB.dgn

LOCHNER	USER NAME =	DESIGNED -	REVISED	STATE OF ILLINOIS DEPARTMENT OF TRANSPORTATION	SOIL BORINGS 9 STRUCTURE NO. 016–D010	F.A.P. RTE.	SECTION	COUNTY	TOTAL SHEETS	SHEET NO.
H. W. LOCHNER, INC. 225 WEST WASHINGTON STREET 12 TH FLOOR CHICAGO, ILLINOIS 60606	FILE NAME = 016D010-60L72-038-SB.dgn	CHECKED -	REVISED			351	2010-081-R	COOK	1045	416
	PLOT SCALE =	DRAWN - EF	REVISED					CONTRACT NO. 60L72		
	PLOT DATE =	CHECKED - RH	REVISED		SHEET NO. 38 OF 47 SHEETS		ILLINOIS	FED. AID PROJECT		

Geo Services, Inc.
Geotechnical, Environmental & Civil Engineering
805 Aimhurst Court, Suite 204
Naperville, Illinois 60565
(630) 355-2868

GSI Job No. 10195

SOIL BORING LOG

Page 1 of 2

Date 2/21/12

ROUTE IL Route 7/U.S. Route 6 (159th St.) DESCRIPTION IL Rte. 7 from Will Cook Rd. to Ravinia Av LOGGED BY NW

SECTION 2010-081-R LOCATION SE1/4, SEC. 17, TWP. T36N, RNG. R12E, 3rd PM

COUNTY Cook DRILLING METHOD HSA/ROTARY HAMMER TYPE CME Automatic

STRUCT. NO. 016-D010
Station
BORING NO. SB-03
Station 375+90
Offset 18.30ft Right
Ground Surface Elev. 686.90 ft

Surface Water Elev. n/a ft
Stream Bed Elev. n/a ft
Groundwater Elev.:
First Encounter 681.4 ft
Upon Completion n/a ft
After Hrs. ft

Description	Elev.	DEPTH (ft)	BLOWS (/6")	UCS Qu (tsf)	MOIST (%)
SAND & GRAVEL-dark brown	686.00				10
CLAY-dark brown-very stiff (Fill)			4		
			8	2.9	21
			8	B	
	683.40				
ORGANIC SILTY CLAY-black-very loose			1		
			2	0.8	60
		-5	2	P	
			0		
	679.90		1	0.6	27
SILTY CLAY-brown & gray-very loose (Wet)			1	B	
			1		
			1	0.3	27
		-10	2	B	
	675.90				
CLAY-gray-stiff to very stiff			1		
			3	1.5	23
			4	B	
			2		
			4	2.6	20
		-15	5	B	
			3		
			3	1.5	23
			5	B	
			3		
			4	1.6	17
		-20	4	B	
CLAY-gray-stiff to very stiff *(continued)*					
			4		
			3	1.0	16
			3	B	
			2		
			2	1.0	20
			3	P	
		-25			
			3		
			5	1.3	16
			7	B	
	658.90				
SILT-gray-medium dense			8		
			9		15
		-30	10		
	654.90				
CLAY-gray-stiff (Wet)			3		
			4	1.1	28
		-35	5	B	
	649.90				
CLAYEY SAND & GRAVEL-gray-medium dense			8		
			8		6
		-40	8		

The Unconfined Compressive Strength (UCS) Failure Mode is indicated by (B-Bulge, S-Shear, P-Penetrometer)
The SPT (N value) is the sum of the last two blow values in each sampling zone (AASHTO T206)

BBS, from 137 (Rev. 8-99)

Geo Services, Inc.
Geotechnical, Environmental & Civil Engineering
805 Aimhurst Court, Suite 204
Naperville, Illinois 60565
(630) 355-2868

GSI Job No. 10195

SOIL BORING LOG

Page 2 of 2

Date 2/21/12

ROUTE IL Route 7/U.S. Route 6 (159th St.) DESCRIPTION IL Rte. 7 from Will Cook Rd. to Ravinia Av. LOGGED BY NW

SECTION 2010-081-R LOCATION SE1/4, SEC. 17, TWP. T36N, RNG. R12E, 3rd PM

COUNTY Cook DRILLING METHOD HSA/ROTARY HAMMER TYPE CME Automatic

STRUCT. NO. 016-D010
Station
BORING NO. SB-03
Station 375+90
Offset 18.30ft Right
Ground Surface Elev. 686.90 ft

Surface Water Elev. n/a ft
Stream Bed Elev. n/a ft
Groundwater Elev.:
First Encounter 681.4 ft
Upon Completion n/a ft
After Hrs. ft

Description	Elev.	DEPTH (ft)	BLOWS (/6")	UCS Qu (tsf)	MOIST (%)
CLAYEY SAND & GRAVEL-gray-medium dense *(continued)*	644.90				
CLAY-gray-stiff to very stiff			7		
			9	2.0	20
		-45	12	B	
			6		
			7	1.6	13
		-50	9	B	
			3		
			5	1.5	20
		-55	6	B	
	629.90				
SANDY LOAM-gray-medium dense to dense			4		
			5		18
		-60	5		
SANDY LOAM-gray-medium dense to dense *(continued)*					
			8		
			16		22
		-65	22		
	619.90				
SAND & GRAVEL-gray-dense			15		
			16		7
		-70	16		
			12		
			17		11
	611.90	-75	25		
End Of Boring @ -75.0'. Boring backfilled with cuttings.					

The Unconfined Compressive Strength (UCS) Failure Mode is indicated by (B-Bulge, S-Shear, P-Penetrometer)
The SPT (N value) is the sum of the last two blow values in each sampling zone (AASHTO T206)

BBS, from 137 (Rev. 8-99)

Z:\PROJECTS\2010\10195 H.W.LOCHNER IL 7 WILL COOK RD. TO US 45 (FTB 157, 5419156) BORING LOGS\10195_LOG.GPJ 8/17/12

T:\5106-US6\Structures\dgn\Land Bridges\Land Bridge 1 - 016-D010\016D010-60L72-039-SB.dgn

LOCHNER	USER NAME =	DESIGNED -	REVISED	STATE OF ILLINOIS DEPARTMENT OF TRANSPORTATION	SOIL BORINGS 10 STRUCTURE NO. 016-D010	F.A.P. RTE.	SECTION	COUNTY	TOTAL SHEETS	SHEET NO.
H. W. LOCHNER, INC. 225 WEST WASHINGTON STREET 12 TH FLOOR CHICAGO, ILLINOIS 60606	FILE NAME = 016D010-60L72-039-SB.dgn	CHECKED -	REVISED			351	2010-081-R	COOK	1045	417
	PLOT SCALE =	DRAWN - EF	REVISED					CONTRACT NO. 60L72		
	PLOT DATE =	CHECKED - RH	REVISED		SHEET NO. 39 OF 47 SHEETS		ILLINOIS	FED. AID PROJECT		

Geo Services, Inc.
Geotechnical, Environmental & Civil Engineering
805 Emmerson Court, Suite 204
Naperville, Illinois 60565
(630) 355-2556

SOIL BORING LOG

GSI Job No. 10195
Page 1 of 2
Date 3/7/12

ROUTE IL Route 7/U.S. Route 6 (159th St.) DESCRIPTION IL Rte. 7 from Will Cook Rd. to Ravinia Av. LOGGED BY JZ

SECTION 2010-081-R LOCATION SE1/4, SEC. 17, TWP. T36N, RNG. R12E, 3rd PM

COUNTY Cook DRILLING METHOD HSA/ROTARY HAMMER TYPE CME Automatic

STRUCT. NO. 016-D010
Station
BORING NO. SB-04
Station 376+15
Offset 23.90ft Left
Ground Surface Elev. 684.70 ft

Surface Water Elev. n/a ft
Stream Bed Elev. n/a ft
Groundwater Elev.:
First Encounter 673.7 ft ▼
Upon Completion n/a ft
After ___ Hrs. ___ ft

Description	Elev. (ft)	DEPTH (ft)	BLOWS (/6")	UCS Qu (tsf)	MOIST (%)
SAND, GRAVEL & STONE	683.70				7
CLAY to CLAY LOAM-brown, gray & black-stiff to very stiff (Fill)			2		
			3	1.3	23
			4	P	
			4		
			5	3.5	22
		-5	8	P	
			6		
			6	1.3	33
			4	P	
PEAT-dark brown & black-very loose	676.70				
			ST		310
		-10			
			2		
			1		379
			1		
			0		
			0		250
		-15	0		
			0		
			0	<0.25	155
			0	P	
			0		
			0	<0.25	99
		-20	0	P	
PEAT-dark brown & black-very loose *(continued)*					
			0		
			0	<0.25	118
			1	P	
ORGANIC SILTY CLAY-dark gray-very loose	661.70				
			1		
			0	<0.25	55
		-25	0	P	
			0		
			0	<0.25	60
			0	P	
CLAY-gray-soft to very stiff	656.70				
			1		
			2	0.4	26
		-30	3	B	
			2		
			3	0.5	24
		-35	6	B	
			5		
			8	1.7	21
		-40	12	B	

The Unconfined Compressive Strength (UCS) Failure Mode is indicated by (B-Bulge, S-Shear, P-Penetrometer)
The SPT (N value) is the sum of the last two blow values in each sampling zone (AASHTO T206)

BBS, from 137 (Rev. 8-99)

Geo Services, Inc.
Geotechnical, Environmental & Civil Engineering
805 Emmerson Court, Suite 204
Naperville, Illinois 60565
(630) 355-2556

SOIL BORING LOG

GSI Job No. 10195
Page 2 of 2
Date 3/7/12

ROUTE IL Route 7/U.S. Route 6 (159th St.) DESCRIPTION IL Rte. 7 from Will Cook Rd. to Ravinia Av. LOGGED BY JZ

SECTION 2010-081-R LOCATION SE1/4, SEC. 17, TWP. T36N, RNG. R12E, 3rd PM

COUNTY Cook DRILLING METHOD HSA/ROTARY HAMMER TYPE CME Automatic

STRUCT. NO. 016-D010
Station
BORING NO. SB-04
Station 376+15
Offset 23.90ft Left
Ground Surface Elev. 684.70 ft

Surface Water Elev. n/a ft
Stream Bed Elev. n/a ft
Groundwater Elev.:
First Encounter 673.7 ft ▼
Upon Completion n/a ft
After ___ Hrs. ___ ft

Description	Elev. (ft)	DEPTH (ft)	BLOWS (/6")	UCS Qu (tsf)	MOIST (%)
CLAY-gray-soft to very stiff *(continued)*					
			5		
			7	1.6	21
		-45	9	B	
			3		
			5	1.3	16
		-50	7	B	
			10		
			12	1.2	16
		-55	8	B	
			7		
			9	1.0	20
		-60	13	P	
CLAY-gray-soft to very stiff *(continued)*					
			6		
			6	1.1	12
		-65	9	B	
			6		
			10	1.5	21
		-70	15	B	
			8		
			10	2.9	20
	609.70	-75	10	B	
End Of Boring @ -75.0'. Boring backfilled with cuttings.					
		-80			

The Unconfined Compressive Strength (UCS) Failure Mode is indicated by (B-Bulge, S-Shear, P-Penetrometer)
The SPT (N value) is the sum of the last two blow values in each sampling zone (AASHTO T206)

BBS, from 137 (Rev. 8-99)

T:\5106-USGS\Structures\Land Bridges\Land Bridge 1 - 016-D010\016D010-60L72-040-SB.dgn

Z:\PROJECTS\2010\10195 H.W.LOCHNER, IL 7 WILL COOK RD. TO US 45 (PTB 157, SX\5195 BORING LOGS\10195_LOG.GPJ 9/7/12

LOCHNER				STATE OF ILLINOIS DEPARTMENT OF TRANSPORTATION	SOIL BORINGS 11 STRUCTURE NO. 016-D010	F.A.P. RTE.	SECTION	COUNTY	TOTAL SHEETS	SHEET NO.
H. W. LOCHNER, INC. 225 WEST WASHINGTON STREET 12 TH FLOOR CHICAGO, ILLINOIS 60606	USER NAME =	DESIGNED -	REVISED			351	2010-081-R	COOK	1045	418
	FILE NAME = 016D010-60L72-040-SB.dgn	CHECKED -	REVISED					CONTRACT NO. 60L72		
	PLOT SCALE =	DRAWN - EF	REVISED		SHEET NO. 40 OF 47 SHEETS		ILLINOIS	FED. AID PROJECT		
	PLOT DATE =	CHECKED - RH	REVISED							

Geo Services, Inc.
Geotechnical, Environmental & Civil Engineering
805 Amherst Court, Suite 204
Naperville, Illinois 60565
(630) 355-2888

SOIL BORING LOG

GSI Job No. 10195
Page 1 of 2
Date 3/6/12

ROUTE IL Route 7/U.S. Route 6 (159th St.) DESCRIPTION IL Rte. 7 from Will Cook Rd. to Ravinia Av. LOGGED BY JZ

SECTION 2010-081-R LOCATION SE1/4, SEC. 17, TWP. T36N, RNG. R12E, 3rd PM

COUNTY Cook DRILLING METHOD HSA/ROTARY HAMMER TYPE CME Automatic

STRUCT. NO. 016-D010
Station
BORING NO. SB-05
Station 377+14
Offset 24.00ft Left
Ground Surface Elev. 686.50 ft

Surface Water Elev. n/a ft
Stream Bed Elev. n/a ft
Groundwater Elev.:
First Encounter 679.0 ft ▼
Upon Completion n/a ft
After ___ Hrs. ___ ft

Description	Elev.	DEPTH (ft)	BLOWS (/6")	UCS Qu (tsf)	MOIST (%)
CRUSHED STONE	686.20				
CLAY LOAM-dark brown & gray-soft to medium stiff (Fill)					4
			2		
			3	0.8	23
			3	P	
			1		
			2	0.4	26
		-5	2	B	
			2		
			3	0.4	26
			3	B	
	678.50				
PEAT-dark brown & black-very loose			1		
			1		171
		-10	1		
			0		
			0		399
			0		
			0		
			0		171
		-15	0		
	671.00				
ORGANIC SILTY CLAY LOAM-dark gray-very loose			0		
			2		56
			1		
			0		
			0	0.3	48
		-20	0	B	

Description	Elev.	DEPTH (ft)	BLOWS (/6")	UCS Qu (tsf)	MOIST (%)
CLAY-gray-medium stiff to very stiff	666.00				
			2		
			3	0.5	26
			5	B	
			3		
			4	1.2	24
		-25	4	B	
			3		
			4	1.4	22
			5	B	
			4		
			6	2.0	22
		-30	8	B	
			3		
			4	0.6	24
		-35	5	B	
			3		
			4	0.6	23
		-40	6	B	

The Unconfined Compressive Strength (UCS) Failure Mode is indicated by (B-Bulge, S-Shear, P-Penetrometer)
The SPT (N value) is the sum of the last two blow values in each sampling zone (AASHTO T206)

BBS, from 137 (Rev. 8-99)

Geo Services, Inc.
Geotechnical, Environmental & Civil Engineering
805 Amherst Court, Suite 204
Naperville, Illinois 60565
(630) 355-2888

SOIL BORING LOG

GSI Job No. 10195
Page 2 of 2
Date 3/6/12

ROUTE IL Route 7/U.S. Route 6 (159th St.) DESCRIPTION IL Rte. 7 from Will Cook Rd. to Ravinia Av. LOGGED BY JZ

SECTION 2010-081-R LOCATION SE1/4, SEC. 17, TWP. T36N, RNG. R12E, 3rd PM

COUNTY Cook DRILLING METHOD HSA/ROTARY HAMMER TYPE CME Automatic

STRUCT. NO. 016-D010
Station
BORING NO. SB-05
Station 377+14
Offset 24.00ft Left
Ground Surface Elev. 686.50 ft

Surface Water Elev. n/a ft
Stream Bed Elev. n/a ft
Groundwater Elev.:
First Encounter 679.0 ft ▼
Upon Completion n/a ft
After ___ Hrs. ___ ft

Description	Elev.	DEPTH (ft)	BLOWS (/6")	UCS Qu (tsf)	MOIST (%)
CLAY-gray-medium stiff to very stiff *(continued)*					
	644.50				
GRAVEL-gray-very dense					
			50/3		
					8
		-45			
	639.50				
CLAY LOAM-gray-very stiff					
			12		
			23	2.5	12
		-50	17	P	
	634.50				
SILTY SAND with GRAVEL-gray-dense					
			10		
			13		11
		-55	15		
			13		
			17		13
	626.50	-60	21		

Description	Elev.	DEPTH (ft)	BLOWS (/6")	UCS Qu (tsf)	MOIST (%)
BOULDER Auger refusal at 62.0'					
	624.50				
End Of Boring @ -62.0'. Boring backfilled with cuttings.					
		-65			
		-70			
		-75			
		-80			

The Unconfined Compressive Strength (UCS) Failure Mode is indicated by (B-Bulge, S-Shear, P-Penetrometer)
The SPT (N value) is the sum of the last two blow values in each sampling zone (AASHTO T206)

BBS, from 137 (Rev. 8-99)

T:\5106-USE\Struct\dgn\Land Bridges\Land Bridge 1 - 016-D010\016D010-60L72-041-SB.dgn

Z:\PROJECTS\2010\10195\11\W LOCHNER, IL 7 WILL COOK RD. TO US 45 (PTB 157, 51)\10195 BORING LOGS\10195_LOG.GPJ 9/17/12

LOCHNER
H. W. LOCHNER, INC.
225 WEST WASHINGTON STREET
12 TH FLOOR
CHICAGO, ILLINOIS 60606

USER NAME =	DESIGNED -	REVISED
FILE NAME = 016D010-60L72-041-SB.dgn	CHECKED -	REVISED
PLOT SCALE =	DRAWN - EF	REVISED
PLOT DATE =	CHECKED - RH	REVISED

STATE OF ILLINOIS
DEPARTMENT OF TRANSPORTATION

SOIL BORINGS 12
STRUCTURE NO. 016–D010
SHEET NO. 41 OF 47 SHEETS

F.A.P. RTE.	SECTION	COUNTY	TOTAL SHEETS	SHEET NO.
351	2010-081-R	COOK	1045	419
		CONTRACT NO. 60L72		
	ILLINOIS FED. AID PROJECT			

Geo Services, Inc.
Geotechnical, Environmental & Civil Engineering
805 Aimhurst Court, Suite 204
Naperville, Illinois 60565
(630) 355-7588

SOIL BORING LOG

GSI Job No. 10195
Page 1 of 2
Date 3/12/12

ROUTE IL Route 7/U.S. Route 6 (159th St.) DESCRIPTION IL Rte. 7 from Will Cook Rd. to Ravinia Av LOGGED BY TZ
SECTION 2010-081-R LOCATION SE1/4, SEC. 17, TWP. T36N, RNG. R12E, 3rd PM
COUNTY Cook DRILLING METHOD HSA/ROTARY HAMMER TYPE CME Automatic

STRUCT. NO. 016-D010
Station
BORING NO. SB-06
Station 378+04
Offset 14.00ft Right
Ground Surface Elev. 686.80 ft

Surface Water Elev. n/a ft
Stream Bed Elev. n/a ft
Groundwater Elev.:
First Encounter Dry to 10' ft
Upon Completion n/a ft
After Hrs. ft

Description	Elev.	DEPTH (ft)	BLOWS (/6")	UCS Qu (tsf)	MOIST (%)
CRUSHED STONE-medium dense					7
			8		
			15		6
			9		
CLAY LOAM-dark brown, gray & black-stiff (Fill)	683.80				
			3		
			4	1.1	23
		-5	3	B	
			3		
			4	1.9	30
			5	B	
PEAT-dark brown & black-very loose	678.80				
			ST		241
		-10			
			0		
			1	<.25	432
			1	P	
			0		
			0	<.25	204
		-15	0	P	
			0		
			1	<.25	95
			1	P	
ORGANIC SILTY CLAY-dark gray-very loose	668.80				
			0		
			0	<.25	52
		-20	0	P	
ORGANIC SILTY CLAY-dark gray-very loose *(continued)*					
			0		
			0	<.25	62
			0	P	
SILTY LOAM-gray-very loose to loose	663.80				
			0		
			0		25
		-25	0		
			2		
			3		25
			4		
CLAY-gray-stiff to hard	658.80				
			3		
			4	1.5	22
		-30	7	B	
			7		
			9	4.3	19
		-35	10	B	
SILTY SAND-gray-medium dense	649.80				
			7		
			9		17
		-40	9		

The Unconfined Compressive Strength (UCS) Failure Mode is indicated by (B-Bulge, S-Shear, P-Penetrometer)
The SPT (N value) is the sum of the last two blow values in each sampling zone (AASHTO T206)
BBS, from 137 (Rev. 8-99)

Geo Services, Inc.
Geotechnical, Environmental & Civil Engineering
805 Aimhurst Court, Suite 204
Naperville, Illinois 60565
(630) 355-7588

SOIL BORING LOG

GSI Job No. 10195
Page 2 of 2
Date 3/12/12

ROUTE IL Route 7/U.S. Route 6 (159th St.) DESCRIPTION IL Rte. 7 from Will Cook Rd. to Ravinia Av. LOGGED BY TZ
SECTION 2010-081-R LOCATION SE1/4, SEC. 17, TWP. T36N, RNG. R12E, 3rd PM
COUNTY Cook DRILLING METHOD HSA/ROTARY HAMMER TYPE CME Automatic

STRUCT. NO. 016-D010
Station
BORING NO. SB-06
Station 378+04
Offset 14.00ft Right
Ground Surface Elev. 686.80 ft

Surface Water Elev. n/a ft
Stream Bed Elev. n/a ft
Groundwater Elev.:
First Encounter Dry to 10' ft
Upon Completion n/a ft
After Hrs. ft

Description	Elev.	DEPTH (ft)	BLOWS (/6")	UCS Qu (tsf)	MOIST (%)
SILTY SAND-gray-medium dense *(continued)*					
			4		
			5		14
		-45	5		
			3		
			4	1.2	23
		-50	6	B	
			5		
			6	1.3	22
		-55	7	B	
SILTY LOAM-gray-medium dense	629.80				
			6		
			7		21
		-60	8		
SILTY LOAM-gray-medium dense *(continued)*					
	624.80				
CLAY-gray-medium stiff to stiff					
			3		
			5	1.2	16
		-65	7	B	
			3		
			4	0.8	15
		-70	5	B	
CLAY LOAM-gray-medium dense	614.80				
			3		
			4		13
	611.80	-75	6		
End Of Boring @ -75.0'. Boring backfilled with cuttings.					

The Unconfined Compressive Strength (UCS) Failure Mode is indicated by (B-Bulge, S-Shear, P-Penetrometer)
The SPT (N value) is the sum of the last two blow values in each sampling zone (AASHTO T206)
BBS, from 137 (Rev. 8-99)

Z:\PROJECTS\2010\10195 IL 7 WILL COOK RD. TO US 45 (PTB 157-51)\195 BORING LOGS\10195_LOG.GPJ 9/17/12

T:\5106-US6\Structure\dgn\Land Bridges\Land Bridge 1 - 016-D010\016D010-60L72-042-SB.dgn

LOCHNER	USER NAME =	DESIGNED -	REVISED	STATE OF ILLINOIS DEPARTMENT OF TRANSPORTATION	SOIL BORINGS 13 STRUCTURE NO. 016-D010	F.A.P. RTE.	SECTION	COUNTY	TOTAL SHEETS	SHEET NO.
H. W. LOCHNER, INC. 225 WEST WASHINGTON STREET 12 TH FLOOR CHICAGO, ILLINOIS 60606	FILE NAME = 016D010-60L72-042-SB.dgn	CHECKED -	REVISED			351	2010-081-R	COOK	1045	420
	PLOT SCALE =	DRAWN - EF	REVISED					CONTRACT NO. 60L72		
	PLOT DATE =	CHECKED - RH	REVISED		SHEET NO. 42 OF 47 SHEETS		ILLINOIS	FED. AID PROJECT		

Geo Services, Inc.
Geotechnical | Environmental & Civil Engineering
805 Aimwell Court, Suite 204
Naperville, Illinois 60565
(630) 355-2566

GSI Job No. 10195

SOIL BORING LOG

Page 1 of 2

Date 3/6/12

ROUTE IL Route 7/U.S. Route 6 (159th St.) DESCRIPTION IL Rte. 7 from Will Cook Rd. to Ravinia Av LOGGED BY JZ

SECTION 2010-081-R LOCATION SE1/4, SEC. 17, TWP. T36N, RNG. R12E, 3rd PM

COUNTY Cook DRILLING METHOD HSA/ROTARY HAMMER TYPE CME Automatic

STRUCT. NO. 016-D010
Station

BORING NO. SB-07
Station 378+12
Offset 25.40ft Left
Ground Surface Elev. 686.40 ft

Surface Water Elev. n/a ft
Stream Bed Elev. n/a ft

Groundwater Elev.:
First Encounter Dry to 10' ft
Upon Completion n/a ft
After Hrs. ft

Description	Elev.	DEPTH (ft)	BLOWS (/6")	UCS Qu (tsf)	MOIST (%)
CLAYEY SAND & GRAVEL-dark gray	686.20				13
CLAY to CLAY LOAM-dark brown & gray-medium stiff to very stiff (Fill)			2		
			3		17
			4		
			2		
		-5	2	0.9	24
			3	B	
			2		
			3	2.1	21
			4	B	
			1		
			2	0.6	29
		-10	2	B	
PEAT-dark brown & black-very loose	675.90		ST		
					422
			1		
			1		424
		-15	1		
			1		
			1		110
			1		
ORGANIC SILTY CLAY-dark gray-very loose	668.40		0		
		-20	0		58
ORGANIC SILTY CLAY-dark gray-very loose *(continued)*			0		
			0		53
			0		
CLAY-gray-medium stiff to stiff	663.40		1		
		-25	2	0.6	26
			3	B	
			2		
			3	0.6	24
			5	B	
			2		
			4	1.0	25
		-30	4	P	
			3		
		-35	3	1.0	28
			5	P	
			2		
		-40	3	0.9	24
			4	B	

The Unconfined Compressive Strength (UCS) Failure Mode is indicated by (B-Bulge, S-Shear, P-Penetrometer)
The SPT (N value) is the sum of the last two blow values in each sampling zone (AASHTO T206)

BBS, from 137 (Rev. 8-99)

Geo Services, Inc.
Geotechnical | Environmental & Civil Engineering
805 Aimwell Court, Suite 204
Naperville, Illinois 60565
(630) 355-2566

GSI Job No. 10195

SOIL BORING LOG

Page 2 of 2

Date 3/6/12

ROUTE IL Route 7/U.S. Route 6 (159th St.) DESCRIPTION IL Rte. 7 from Will Cook Rd. to Ravinia Av. LOGGED BY JZ

SECTION 2010-081-R LOCATION SE1/4, SEC. 17, TWP. T36N, RNG. R12E, 3rd PM

COUNTY Cook DRILLING METHOD HSA/ROTARY HAMMER TYPE CME Automatic

STRUCT. NO. 016-D010
Station

BORING NO. SB-07
Station 378+12
Offset 25.40ft Left
Ground Surface Elev. 686.40 ft

Surface Water Elev. n/a ft
Stream Bed Elev. n/a ft

Groundwater Elev.:
First Encounter Dry to 10' ft
Upon Completion n/a ft
After Hrs. ft

Description	Elev.	DEPTH (ft)	BLOWS (/6")	UCS Qu (tsf)	MOIST (%)
CLAY-gray-medium stiff to stiff *(continued)*			3		
			4	0.8	24
		-45	4	B	
SILTY SAND & GRAVEL-gray-medium dense	639.40		5		
			5		16
		-50	6		
CLAY LOAM-gray-medium stiff	634.40		4		
			5	0.4	14
		-55	8	B	
CLAYEY SAND & GRAVEL-gray-medium dense	629.40		5		
			6		18
		-60	11		
CLAYEY SAND & GRAVEL-gray-medium dense *(continued)*			7		
			11		14
		-65	13		
CLAY LOAM-gray-stiff	619.40		8		
			9	1.3	12
		-70	11	B	
FINE SAND-gray-medium dense	614.40		9		
			11		14
		-75	12		
End Of Boring @ -75.0'. Boring backfilled with cuttings.	611.40	-80			

The Unconfined Compressive Strength (UCS) Failure Mode is indicated by (B-Bulge, S-Shear, P-Penetrometer)
The SPT (N value) is the sum of the last two blow values in each sampling zone (AASHTO T206)

BBS, from 137 (Rev. 8-99)

Z:\PROJECTS\2010\10195 HWY LOCHNER, IL 7 WILL COOK RD. TO US 45 (FTB 157, 51/51195 BORING LOGS\10195_LOG.GPJ 9/17/12

T:\5106-USS\Struct\dgn\Land Bridges\Land Bridge 1 - 016-D010\016D010-60L72-043-SB.dgn

LOCHNER	USER NAME =	DESIGNED -	REVISED	STATE OF ILLINOIS DEPARTMENT OF TRANSPORTATION	SOIL BORINGS 14 STRUCTURE NO. 016-D010	F.A.P. RTE.	SECTION	COUNTY	TOTAL SHEETS	SHEET NO.
H. W. LOCHNER, INC. 225 WEST WASHINGTON STREET 12 TH FLOOR CHICAGO, ILLINOIS 60606	FILE NAME = 016D010-60L72-043-SB.dgn	CHECKED -	REVISED			351	2010-081-R	COOK	1045	421
	PLOT SCALE =	DRAWN - EF	REVISED					CONTRACT NO. 60L72		
	PLOT DATE =	CHECKED - RH	REVISED		SHEET NO. 43 OF 47 SHEETS		ILLINOIS FED. AID PROJECT			

Geo Services, Inc.
Geotechnical, Environmental & Civil Engineering
805 Aimhurst Court, Suite 204
Naperville, Illinois 60565
(630) 355-7588

SOIL BORING LOG

GSI Job No. 10195
Page 1 of 2
Date 3/12/12

ROUTE IL Route 7/U.S. Route 6 (159th St.) DESCRIPTION IL Rte. 7 from Will Cook Rd. to Ravinia Av. LOGGED BY TZ

SECTION 2010-081-R LOCATION SE1/4, SEC. 17, TWP. T36N, RNG. R12E, 3rd PM

COUNTY Cook DRILLING METHOD HSA/ROTARY HAMMER TYPE CME Automatic

STRUCT. NO. 016-D010
Station
BORING NO. SB-08
Station 379+12
Offset 10.50ft Right
Ground Surface Elev. 687.00 ft

Surface Water Elev. n/a ft
Stream Bed Elev. n/a ft
Groundwater Elev.:
First Encounter Dry to 10 ft
Upon Completion n/a ft
After ___ Hrs. ___ ft

Description	DEPTH (ft)	BLOWS (/6")	UCS Qu (tsf)	MOIST (%)
5.0" ASPHALT, 10.0" CRUSHED STONE				
685.75				
CLAY LOAM-dark brown, gray & black-very stiff to hard (Fill)		4		
		4	4.5	19
		4	P	
		3		
		4	2.0	24
	-5	4	P	
681.50				
PEAT-dark brown, gray & black-very loose		2		
		2	1.5	343
		2	P	
		0		
		1	0.3	377
	-10	1	P	
676.50				
SILTY LOAM-gray-very loose (Wet)		0		
		0		36
		1		
674.00				
SILTY CLAY-gray-very soft (Wet)		0		
		0	<.25	34
	-15	0	P	
671.50				
CLAY-gray-medium stiff to very stiff		3		
		5	0.9	24
		6	B	
		3		
		4	0.7	25
	-20	6	B	
CLAY-gray-medium stiff to very stiff *(continued)*				
		3		
		3	1.5	22
		5	B	
		3		
		5	3.3	20
	-25	6	B	
		3		
		5	2.8	21
		5	B	
		3		
		3	2.3	21
	-30	5	B	
		3		
		4	1.8	21
	-35	5	B	
		3		
		4	1.8	23
	-40	6	B	

The Unconfined Compressive Strength (UCS) Failure Mode is indicated by (B-Bulge, S-Shear, P-Penetrometer)
The SPT (N value) is the sum of the last two blow values in each sampling zone (AASHTO T206)

BBS, from 137 (Rev. 8-99)

Geo Services, Inc.
Geotechnical, Environmental & Civil Engineering
805 Aimhurst Court, Suite 204
Naperville, Illinois 60565
(630) 355-7588

SOIL BORING LOG

GSI Job No. 10195
Page 2 of 2
Date 3/12/12

ROUTE IL Route 7/U.S. Route 6 (159th St.) DESCRIPTION IL Rte. 7 from Will Cook Rd. to Ravinia Av. LOGGED BY TZ

SECTION 2010-081-R LOCATION SE1/4, SEC. 17, TWP. T36N, RNG. R12E, 3rd PM

COUNTY Cook DRILLING METHOD HSA/ROTARY HAMMER TYPE CME Automatic

STRUCT. NO. 016-D010
Station
BORING NO. SB-08
Station 379+12
Offset 10.50ft Right
Ground Surface Elev. 687.00 ft

Surface Water Elev. n/a ft
Stream Bed Elev. n/a ft
Groundwater Elev.:
First Encounter Dry to 10' ft
Upon Completion n/a ft
After ___ Hrs. ___ ft

Description	DEPTH (ft)	BLOWS (/6")	UCS Qu (tsf)	MOIST (%)
CLAY-gray-medium stiff to very stiff *(continued)*				
		4		
		6	2.3	12
	-45	9	B	
640.00				
CLAY LOAM-gray-stiff to hard		8		
		10	4.2	16
	-50	13	B	
		4		
		6	1.8	15
	-55	8	B	
630.00				
SILTY LOAM-gray-loose to medium dense		3		
		3		28
	-60	5		
SILTY LOAM-gray-loose to medium dense *(continued)*				
		3		
		5		20
	-65	7		
620.00				
SILTY SAND with GRAVEL-gray-dense		14		
		21		16
	-70	15		
615.00				
FINE SAND-gray-medium dense		10		
		12		23
612.00	-75	13		
End Of Boring @ -75.0'. Boring backfilled with cuttings.	-80			

The Unconfined Compressive Strength (UCS) Failure Mode is indicated by (B-Bulge, S-Shear, P-Penetrometer)
The SPT (N value) is the sum of the last two blow values in each sampling zone (AASHTO T206)

BBS, from 137 (Rev. 8-99)

T:\5106-USGS\Struct\dgn\Land Bridges\Land Bridge 1 - 016-D010\016D010-60L72-844-SB.dgn

LOCHNER	USER NAME =	DESIGNED -	REVISED	STATE OF ILLINOIS DEPARTMENT OF TRANSPORTATION	SOIL BORINGS 15 STRUCTURE NO. 016-D010	F.A.P. RTE.	SECTION	COUNTY	TOTAL SHEETS	SHEET NO.
H. W. LOCHNER, INC. 225 WEST WASHINGTON STREET 12 TH FLOOR CHICAGO, ILLINOIS 60606	FILE NAME = 016D010-60L72-844-SB.dgn	CHECKED -	REVISED			351	2010-081-R	COOK	1045	422
	PLOT SCALE =	DRAWN - EF	REVISED		SHEET NO. 44 OF 47 SHEETS			CONTRACT NO. 60L72		
	PLOT DATE =	CHECKED - RH	REVISED				ILLINOIS FED. AID PROJECT			

Geo Services, Inc.
Geotechnical, Environmental & Civil Engineering
605 Ainsworth Court, Suite 204
Naperville, Illinois 60565
(630) 355-3586

SOIL BORING LOG

GSI Job No. 10195
Page 1 of 2
Date 3/6/12

ROUTE IL Route 7/U.S. Route 6 (159th St.) DESCRIPTION IL Rte. 7 from Will Cook Rd. to Ravinia Av. LOGGED BY RR

SECTION 2010-081-R LOCATION SE1/4, SEC. 17, TWP. T36N, RNG. R12E, 3rd PM

COUNTY Cook DRILLING METHOD HSA/ROTARY HAMMER TYPE CME Automatic

STRUCT. NO. 016-D010
Station
BORING NO. SB-09
Station 379+10
Offset 21.10ft Left
Ground Surface Elev. 686.70 ft

Surface Water Elev. n/a ft
Stream Bed Elev. n/a ft
Groundwater Elev.:
First Encounter Dry to 10' ft
Upon Completion n/a ft
After Hrs. ft

Description	Elev.	DEPTH (ft)	BLOWS (/6")	UCS Qu (tsf)	MOIST (%)
ASPHALT	685.80				
CLAY LOAM with GRAVEL-dark brown to black-loose (Fill)			4		
			4	2.5	17
			4	P	
CLAY-brown & gray-stiff to very stiff	683.70		3		
			3	1.5	22
		-5	4	B	
			4		
			4	2.4	24
			6	B	
			3		
			2	2.3	21
		-10	2	B	
PEAT-dark brown & black-very loose	676.20		1		
			1		461
			2		
			1		
			1		360
		-15	1		
			1		
			1	0.3	126
			1	P	
ORGANIC SILTY CLAY-dark gray-very loose	668.70		0		
			0	<0.25	47
		-20	0	P	
ORGANIC SILTY CLAY-dark gray-very loose *(continued)*					
			0		
			0	<0.25	49
			0	P	
			0		
			0	<0.25	53
		-25	1	P	
CLAY-gray-stiff to very stiff	660.70		3		
			6	1.1	24
			6	B	
			3		
			4	1.2	23
		-30	6	B	
			5		
			7	2.0	22
		-35	10	B	
			4		
			7	2.4	21
		-40	8	B	

The Unconfined Compressive Strength (UCS) Failure Mode is indicated by (B-Bulge, S-Shear, P-Penetrometer)
The SPT (N value) is the sum of the last two blow values in each sampling zone (AASHTO T206)

BBS, from 137 (Rev. 8-99)

Geo Services, Inc.
Geotechnical, Environmental & Civil Engineering
605 Ainsworth Court, Suite 204
Naperville, Illinois 60565
(630) 355-3586

SOIL BORING LOG

GSI Job No. 10195
Page 2 of 2
Date 3/6/12

ROUTE IL Route 7/U.S. Route 6 (159th St.) DESCRIPTION IL Rte. 7 from Will Cook Rd. to Ravinia Av. LOGGED BY RR

SECTION 2010-081-R LOCATION SE1/4, SEC. 17, TWP. T36N, RNG. R12E, 3rd PM

COUNTY Cook DRILLING METHOD HSA/ROTARY HAMMER TYPE CME Automatic

STRUCT. NO. 016-D010
Station
BORING NO. SB-09
Station 379+10
Offset 21.10ft Left
Ground Surface Elev. 686.70 ft

Surface Water Elev. n/a ft
Stream Bed Elev. n/a ft
Groundwater Elev.:
First Encounter Dry to 10' ft
Upon Completion n/a ft
After Hrs. ft

Description	Elev.	DEPTH (ft)	BLOWS (/6")	UCS Qu (tsf)	MOIST (%)
CLAY-gray-stiff to very stiff *(continued)*					
			4		
			5	1.5	24
		-45	7	B	
			4		
			6	1.5	22
		-50	9	B	
			6		
			10	1.0	22
		-55	19	P	
			12		
			13	3.2	15
		-60	19	B	
CLAY-gray-stiff to very stiff *(continued)*					
			7		
			9		30
		-65	10		
			5		
			4		26
		-70	4		
			6		
			6		23
		-75	6		
SILT-gray-loose to medium dense	624.70				
End Of Boring @ -75.0'. Boring backfilled with cuttings.	611.70	-80			

The Unconfined Compressive Strength (UCS) Failure Mode is indicated by (B-Bulge, S-Shear, P-Penetrometer)
The SPT (N value) is the sum of the last two blow values in each sampling zone (AASHTO T206)

BBS, from 137 (Rev. 8-99)

Z:\PROJECTS\2010\10195 H.W.LOCHNER, IL 7 WILL COOK RD. TO US 45 (PTB 157: 5)\10195 BORING LOGS\10195_LOG.GPJ 8/17/12

T:\5106-USS\Struct\dgn\Land Bridges\Land Bridge 1 - 016-D010\016D010-60L72-045-SB.dgn

LOCHNER	USER NAME =	DESIGNED -	REVISED
H. W. LOCHNER, INC.	FILE NAME = 016D010-60L72-045-SB.dgn	CHECKED -	REVISED
225 WEST WASHINGTON STREET	PLOT SCALE =	DRAWN - EF	REVISED
12 TH FLOOR CHICAGO, ILLINOIS 60606	PLOT DATE =	CHECKED - RH	REVISED

STATE OF ILLINOIS
DEPARTMENT OF TRANSPORTATION

SOIL BORINGS 16
STRUCTURE NO. 016-D010

SHEET NO. 45 OF 47 SHEETS

F.A.P. RTE.	SECTION	COUNTY	TOTAL SHEETS	SHEET NO.
351	2010-081-R	COOK	1045	423

CONTRACT NO. 60L72

ILLINOIS FED. AID PROJECT

Geo Services, Inc.
Geotechnical, Environmental & Civil Engineering
805 Aimwhirl Court, Suite 204
Naperville, Illinois 60565
(630) 355-3586

SOIL BORING LOG

GSI Job No. 10195
Page 1 of 2
Date 3/12/12

ROUTE IL Route 7/U.S. Route 6 (159th St.) DESCRIPTION IL Rte. 7 from Will Cook Rd. to Ravinia Av. LOGGED BY KD

SECTION 2010-081-R LOCATION SE1/4, SEC. 17, TWP. T36N, RNG. R12E, 3rd PM

COUNTY Cook DRILLING METHOD HSA/ROTARY HAMMER TYPE CME Automatic

STRUCT. NO. 016-D010
Station
BORING NO. SB-10
Station 380+03
Offset 13.90ft Right
Ground Surface Elev. 687.00 ft

Surface Water Elev. n/a ft
Stream Bed Elev. n/a ft
Groundwater Elev.:
First Encounter 680.5 ft ▼
Upon Completion n/a ft
After ___ Hrs. ___ ft

Description	Elev.	DEPTH (ft)	BLOWS (/6")	UCS Qu (tsf)	MOIST (%)
ASPHALT	686.10				
SILTY CLAY LOAM-brown & gray-hard (Fill)			4		
			6	4.5	19
			3	P	
SILTY SAND-brown-very loose (Apparently Fill)	684.00				
			2		
			1		23
		-5	2		
CLAY-gray-stiff to hard	681.50				
			5		
			7	5.4	19
			9	B	
			3		
			5	3.6	21
		-10	7	B	
			3		
			4	1.2	23
			7	B	
			2		
			2	1.2	29
		-15	2	B	
			2		
			3	1.2	19
			4	B	
SILTY CLAY LOAM-gray-very stiff	669.00				
			3		
			3	2.4	22
		-20	5	B	
SILTY CLAY LOAM-gray-very stiff (continued)	666.50				
CLAY-gray-stiff to very stiff			2		
			5	2.3	20
			8	P	
			1		
			2	1.0	16
		-25	3	B	
SILT-gray-loose	661.50				
			2		
			2		29
			3		
			2		
			3		22
		-30	3		
SAND & GRAVEL-gray-medium dense	655.00				
			5		
			5		12
		-35	5		
SILTY SAND & GRAVEL-gray-loose	650.00				
			7		
			5		14
		-40	4		

The Unconfined Compressive Strength (UCS) Failure Mode is indicated by (B-Bulge, S-Shear, P-Penetrometer)
The SPT (N value) is the sum of the last two blow values in each sampling zone (AASHTO T206)

BBS, from 137 (Rev. 8-99)

Geo Services, Inc.
Geotechnical, Environmental & Civil Engineering
805 Aimwhirl Court, Suite 204
Naperville, Illinois 60565
(630) 355-3586

SOIL BORING LOG

GSI Job No. 10195
Page 2 of 2
Date 3/12/12

ROUTE IL Route 7/U.S. Route 6 (159th St.) DESCRIPTION IL Rte. 7 from Will Cook Rd. to Ravinia Av. LOGGED BY KD

SECTION 2010-081-R LOCATION SE1/4, SEC. 17, TWP. T36N, RNG. R12E, 3rd PM

COUNTY Cook DRILLING METHOD HSA/ROTARY HAMMER TYPE CME Automatic

STRUCT. NO. 016-D010
Station
BORING NO. SB-10
Station 380+03
Offset 13.90ft Right
Ground Surface Elev. 687.00 ft

Surface Water Elev. n/a ft
Stream Bed Elev. n/a ft
Groundwater Elev.:
First Encounter 680.5 ft ▼
Upon Completion n/a ft
After ___ Hrs. ___ ft

Description	Elev.	DEPTH (ft)	BLOWS (/6")	UCS Qu (tsf)	MOIST (%)
SILTY SAND & GRAVEL-gray-loose (continued)	645.00				
SAND-gray-medium dense			4		
			8		22
		-45	6		
			5		
			5		23
		-50	5		
			4		
			7		24
		-55	7		
SAND & GRAVEL-gray-medium dense	630.00				
			5		
			6		13
		-60	6		
SAND & GRAVEL-gray-medium dense (continued)	625.00				
CLAYEY SAND & GRAVEL-gray-medium dense			9		
			4		11
		-65	8		
SAND & GRAVEL-gray-medium dense	620.00				
			12		
			5		7
		-70	6		
			5		
			6		7
		-75	7		
End Of Boring @ -75.0'. Boring backfilled with cuttings.	612.00				
		-80			

The Unconfined Compressive Strength (UCS) Failure Mode is indicated by (B-Bulge, S-Shear, P-Penetrometer)
The SPT (N value) is the sum of the last two blow values in each sampling zone (AASHTO T206)

BBS, from 137 (Rev. 8-99)

Z:\PROJECTS\2010\10195\LOCHNER, IL 7 WILL COOK RD. TO US 45 (PTB 157.5)\10195 BORING LOGS\10195_LOG.GPJ 8/17/12

T:\5106-USGS\Struct\dgn\Land Bridges\Land Bridge 1 - 016-D010\016D010-60L72-046-SB.dgn

LOCHNER	USER NAME =	DESIGNED -	REVISED
H. W. LOCHNER, INC.	FILE NAME = 016D010-60L72-046-SB.dgn	CHECKED -	REVISED
225 WEST WASHINGTON STREET	PLOT SCALE =	DRAWN - EF	REVISED
12 TH FLOOR CHICAGO, ILLINOIS 60606	PLOT DATE =	CHECKED - RH	REVISED

STATE OF ILLINOIS
DEPARTMENT OF TRANSPORTATION

SOIL BORINGS 17
STRUCTURE NO. 016-D010

SHEET NO. 46 OF 47 SHEETS

F.A.P. RTE.	SECTION	COUNTY	TOTAL SHEETS	SHEET NO.
351	2010-081-R	COOK	1045	424

CONTRACT NO. 60L72

ILLINOIS FED. AID PROJECT

Geo Services, Inc.
Geotechnical, Environmental & Civil Engineering
805 Amherst Court, Suite 204
Naperville, Illinois 60565
(630) 355-2848

GSI Job No. 10195

SOIL BORING LOG

Page 1 of 2

Date 3/12/12

ROUTE IL Route 7/U.S. Route 6 (159th St.) DESCRIPTION IL Rte. 7 from Will Cook Rd. to Ravinia Av. LOGGED BY KD

SECTION 2010-081-R LOCATION SE1/4, SEC. 17, TWP. T36N, RNG. R12E, 3rd PM

COUNTY Cook DRILLING METHOD HSA/ROTARY HAMMER TYPE CME Automatic

STRUCT. NO. 016-D010
Station
BORING NO. SB-11
Station 380+76
Offset 12.30ft Right
Ground Surface Elev. 687.20 ft

Surface Water Elev. n/a ft
Stream Bed Elev. n/a ft
Groundwater Elev.:
First Encounter Dry to 10 ft
Upon Completion n/a ft
After ___ Hrs. ___ ft

Description	Elev.	DEPTH (ft)	BLOWS (/6")	UCS Qu (tsf)	MOIST (%)
ASPHALT	686.10				
CINDERS & SAND-dark brown, gray & black-very loose (Fill)			1		
			1		37
			2		
SAND-brown-very loose (Possible Fill)	684.20				
			1		
			2		17
		-5	1		
CLAY-gray-stiff to very stiff	681.70				
			3		
			5	2.8	21
			6	B	
			2		
			3	1.5	22
		-10	4	B	
CLAYEY SAND & GRAVEL-gray-very loose to loose	676.70				
			3		
			3		16
			4		
			4		
			2		15
		-15	2		
CLAY LOAM-gray-medium stiff to stiff	671.70				
			2		
			3	0.6	16
			4	B	
			2		
			3	1.3	17
		-20	4	B	
SANDY LOAM-gray-loose	666.70				
			4		
			4		24
			5		
CLAY-gray-very stiff	664.20				
			4		
			4	2.0	21
		-25	5	P	
SILTY SAND-gray-loose	661.70				
			2		
			4		21
			4		
SILTY LOAM-gray-loose to medium dense	659.20				
			3		
			4		17
		-30	3		
			4		
		-35	8		20
SAND-gray-medium dense	650.20				
			4		
			6		21
		-40	8		

The Unconfined Compressive Strength (UCS) Failure Mode is indicated by (B-Bulge, S-Shear, P-Penetrometer)
The SPT (N value) is the sum of the last two blow values in each sampling zone (AASHTO T206)

BBS, from 137 (Rev. 8-99)

Geo Services, Inc.
Geotechnical, Environmental & Civil Engineering
805 Amherst Court, Suite 204
Naperville, Illinois 60565
(630) 355-2848

GSI Job No. 10195

SOIL BORING LOG

Page 2 of 2

Date 3/12/12

ROUTE IL Route 7/U.S. Route 6 (159th St.) DESCRIPTION IL Rte. 7 from Will Cook Rd. to Ravinia Av. LOGGED BY KD

SECTION 2010-081-R LOCATION SE1/4, SEC. 17, TWP. T36N, RNG. R12E, 3rd PM

COUNTY Cook DRILLING METHOD HSA/ROTARY HAMMER TYPE CME Automatic

STRUCT. NO. 016-D010
Station
BORING NO. SB-11
Station 380+76
Offset 12.30ft Right
Ground Surface Elev. 687.20 ft

Surface Water Elev. n/a ft
Stream Bed Elev. n/a ft
Groundwater Elev.:
First Encounter Dry to 10' ft
Upon Completion n/a ft
After ___ Hrs. ___ ft

Description	Elev.	DEPTH (ft)	BLOWS (/6")	UCS Qu (tsf)	MOIST (%)
SAND-gray-medium dense *(continued)*	645.20				
SILTY LOAM-gray-medium dense					
			7		
			6		14
		-45	8		
GRAVEL with SAND-gray-medium dense to very dense	640.20				
			12		
			8		9
		-50	10		
			11		
			14		4
		-55	14		
			10		
			14		10
		-60	50/1		
GRAVEL with SAND-gray-medium dense to very dense *(continued)*					
			50/5		
		-65			14
			14		
			9		9
		-70	11		
			9		
			13		11
	612.20	-75	18		
End Of Boring @ -75.0'. Boring backfilled with cuttings.					

The Unconfined Compressive Strength (UCS) Failure Mode is indicated by (B-Bulge, S-Shear, P-Penetrometer)
The SPT (N value) is the sum of the last two blow values in each sampling zone (AASHTO T206)

BBS, from 137 (Rev. 8-99)

Z:\PROJECTS\2010\10195 H.W.LOCHNER, IL 7 WILL COOK RD. TO US 45 (PTB 157.5)\10195 BORING LOGS\10195_LOG.GPJ 8/17/12

T:\5106-USS\Struct\dgn\Land Bridges\Land Bridge 1 - 016-D010\016D010-60L72-047-SB.dgn

LOCHNER H. W. LOCHNER, INC. 225 WEST WASHINGTON STREET 12 TH FLOOR CHICAGO, ILLINOIS 60606	USER NAME =	DESIGNED -	REVISED	STATE OF ILLINOIS DEPARTMENT OF TRANSPORTATION
	FILE NAME = 016D010-60L72-047-SB.dgn	CHECKED -	REVISED	
	PLOT SCALE =	DRAWN - EF	REVISED	
	PLOT DATE =	CHECKED - RH	REVISED	

SOIL BORINGS 18
STRUCTURE NO. 016-D010
SHEET NO. 47 OF 47 SHEETS

F.A.P. RTE.	SECTION	COUNTY	TOTAL SHEETS	SHEET NO.
351	2010-081-R	COOK	1045	425
		CONTRACT NO. 60L72		
	ILLINOIS FED. AID PROJECT			

Bench Mark: BM #48 Set at a notch cut on top of northwest wingwall of bridge US 6 over Marley Creek, Elev. 686.47.
BM #49 Set at a notch cut on south end of east 16' headwall to private entrance, Elev. 687.61, 37' north of ℄ US 6 and ±1000' east of 104th Street.

Existing Structure: S.N. 016-0011. Built in 1937 as S.B.I. Route 53, Section 537-R at Station 386+05.10. Structure consists of 40-spans - one 1-span, one 4-span and seven 5-span continuous reinforced concrete slab units supported on timber piles. Each unit has a width of 20'-0" and a length of 15'-0", 80'-0" and 115'-0" respectively. The overall length of the structure is 900'-0". Reconstructed in 1989 under FAP Rte. 581 (US 6) Section 537(B-R-&RS)86 with the addition of one pier and widening of 4 piers and roadway on the west end of the bridge. Structure to be removed and replaced using stage construction.

JIANQING HONG
081006053
LICENSED STRUCTURAL ENGINEER
EXP. 11/30/16
STATE OF ILLINOIS

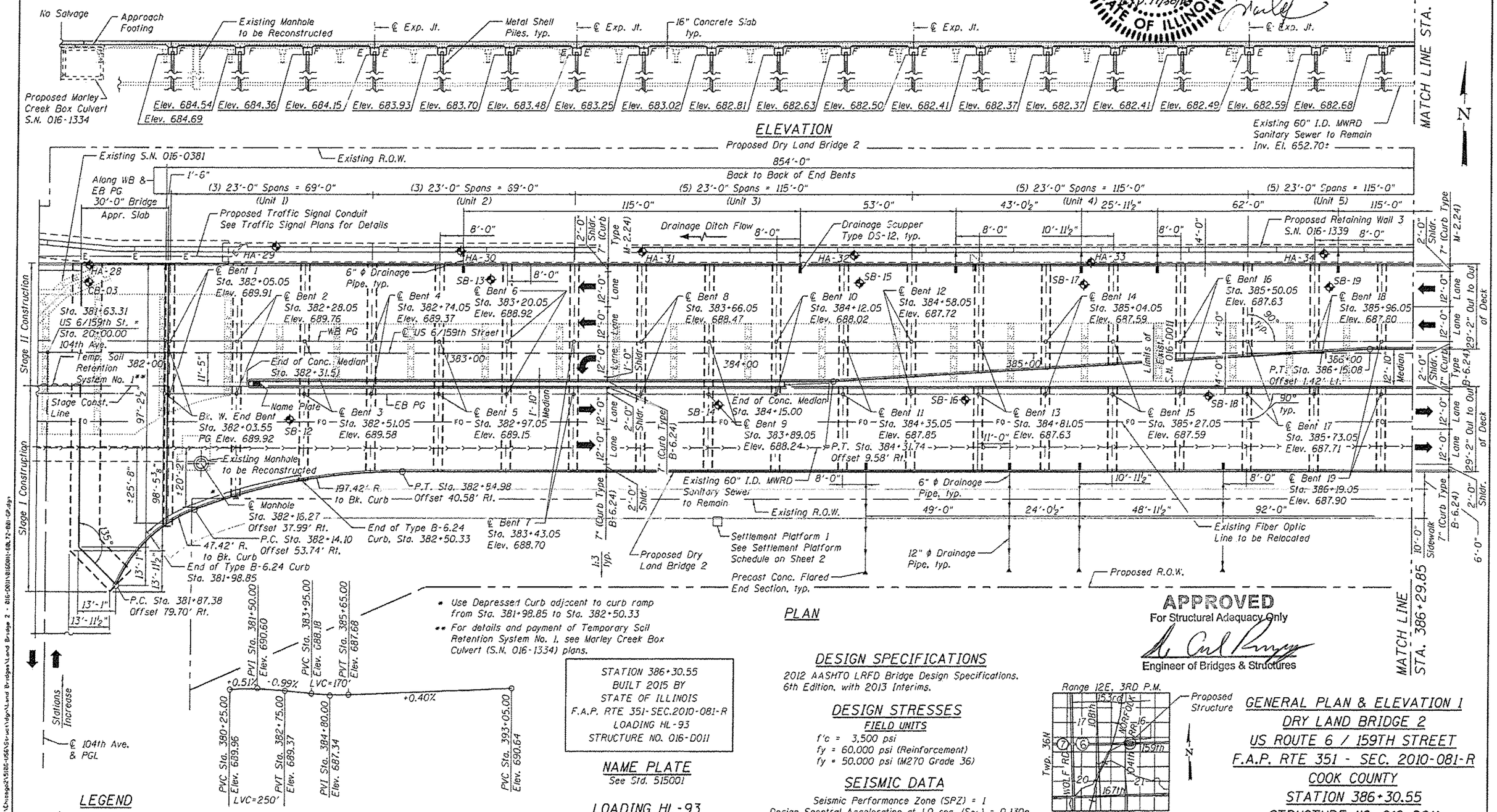

* Use Depressed Curb adjacent to curb ramp from Sta. 381+98.85 to Sta. 382+50.33

** For details and payment of Temporary Soil Retention System No. 1, see Marley Creek Box Culvert (S.N. 016-1334) plans.

STATION 386+30.55
BUILT 2015 BY
STATE OF ILLINOIS
F.A.P. RTE 351-SEC.2010-081-R
LOADING HL-93
STRUCTURE NO. 016-D011

NAME PLATE
See Std. 515001

LOADING HL-93
Allow 50#/sq. ft. for future wearing surface.

LEGEND
Soil Boring Location

DESIGN SPECIFICATIONS
2012 AASHTO LRFD Bridge Design Specifications, 6th Edition, with 2013 Interims.

DESIGN STRESSES
FIELD UNITS
f'c = 3,500 psi
fy = 60,000 psi (Reinforcement)
fy = 50,000 psi (M270 Grade 36)

SEISMIC DATA
Seismic Performance Zone (SPZ) = 1
Design Spectral Acceleration at 1.0 sec. (S_{D1}) = 0.130g
Design Spectral Acceleration at 0.2 sec. (S_{DS}) = 0.238g
Soil Site Class = E

APPROVED
For Structural Adequacy Only
Engineer of Bridges & Structures

LOCATION SKETCH

GENERAL PLAN & ELEVATION 1
DRY LAND BRIDGE 2
US ROUTE 6 / 159TH STREET
F.A.P. RTE 351 - SEC. 2010-081-R
COOK COUNTY
STATION 386+30.55
STRUCTURE NO. 016-D011

LOCHNER
H. W. LOCHNER, INC.
225 WEST WASHINGTON STREET
12 TH FLOOR
CHICAGO, ILLINOIS 60606

USER NAME =	DESIGNED - LJB	REVISED	
FILE NAME = 016D011-60L72-001-GP.dgn	CHECKED - RH	REVISED	
PLOT SCALE =	DRAWN - LJB	REVISED	
PLOT DATE =	CHECKED - RH	REVISED	

STATE OF ILLINOIS
DEPARTMENT OF TRANSPORTATION

SHEET NO. 1 OF 77 SHEETS

F.A.P. RTE.	SECTION	COUNTY	TOTAL SHEETS	SHEET NO.
351	2010-081-R	COOK	1045	426
		CONTRACT NO. 60L72		
		ILLINOIS FED. AID PROJECT		

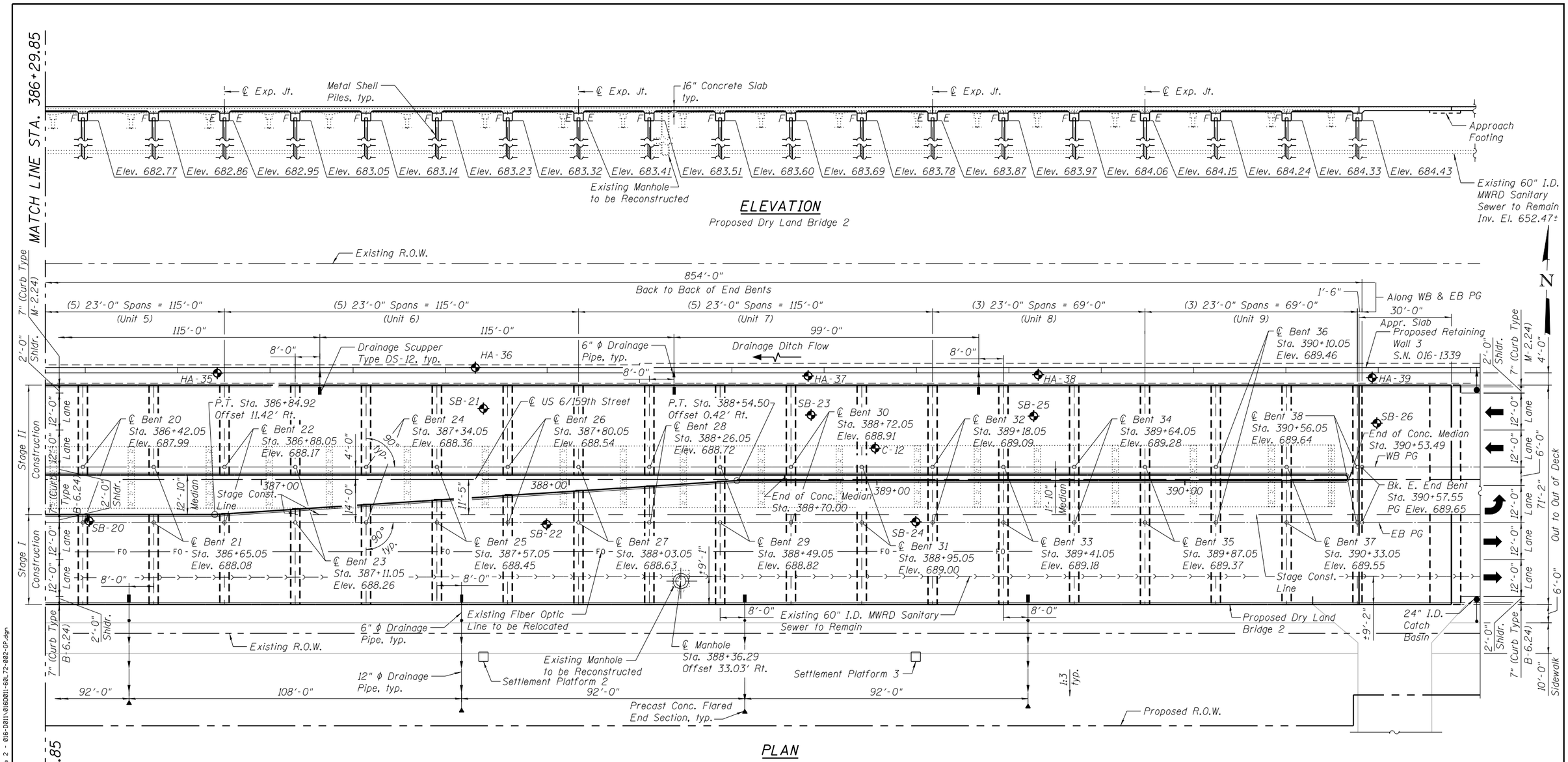

SETTLEMENT PLATFORM SCHEDULE

Settlement Platform I.D.	Station	Offset
Settlement Platform 1	383+93.00	58.00' Rt.
Settlement Platform 2	387+72.00	58.00' Rt.
Settlement Platform 3	389+13.00	58.00' Rt.

The identified settlement platforms are paid for as SETTLEMENT PLATFORMS.

LEGEND

Soil Boring Location

GENERAL PLAN & ELEVATION 2
DRY LAND BRIDGE 2
US ROUTE 6 / 159TH STREET
F.A.P. RTE 351 - SEC. 2010-081-R
COOK COUNTY
STATION 386+30.55
STRUCTURE NO. 016-D011

\\WASCHI\Chicago2\5106-US6\Struct\dgn\Land Bridges\Land Bridge 2 - 016-D011\016D011-60L72-002-GP.dgn

GENERAL NOTES

1. Calculated weight of Structural Steel M270 Grade 36 = 2,580lb.
2. All structural steel shall be AASHTO M 270 Grade 36.
3. Reinforcement bars designated (E) shall be epoxy coated.
4. Protective coat shall be applied to surfaces of bridge deck, approach slabs and curbs.
5. Concrete Sealer shall be applied to the designated areas of the Expansion Bent Caps. See Sheet 49 thru 53 for locations.
6. Refer to Roadway Plans for type and quantity of fill material required within the limits of Dry Land Bridge.
7. Piles shall be driven through 18" diameter precored holes extending to the estimated elevation shown on sheet 54 according to Article 512.09(c) of the Standard Specifications. Cost included in driving piles. However, the contractor may cease the precore of piles at the elevation peat is encountered. Loose sand shall be backfilled in the precore holes without compacting.
8. The deck of the existing land bridge shall be removed. The existing bent caps and/or timber piles shall be removed to 2' below bottom of the proposed land bridge slab, abandoned in place and buried under the proposed land bridges.
9. The Contractor shall verify locations of all underground utilities before driving piling. Any disturbance or damage to existing structures, utilities or other property, caused by the Contractor's operation, shall be repaired by the Contractor in a manner satisfactory to the Engineer at no additional cost to the Department.
10. Excavation for placement of slab shall be paid for as Earth Excavation. See Roadway Plans.

TOTAL BILL OF MATERIAL

ITEM	UNIT	SUPER	SUB	TOTAL
Granular Backfill for Structures	Cu. Yd.		81	81
Removal of Existing Structures No. 2	Each	1		1
Structure Excavation	Cu. Yd.		1,813	1,813
Concrete Structures	Cu. Yd.		775.6	775.6
Concrete Superstructure	Cu. Yd.	3,688.0		3,688.0
Bridge Deck Grooving	Sq. Yd.	6,383		6,383
Protective Coat	Sq. Yd.	7,117		7,117
Reinforcement Bars, Epoxy Coated	Pound	704,810	84,410	789,220
Bar Splicers	Each	464	225	689
Mechnical Splicers	Each	1,009	80	1,089
Furnishing Metal Shell Piles 14"x0.25"	Foot		27,556	27,556
Driving Piles	Foot		27,556	27,556
Test Pile Metal Shells	Each		20	20
Name Plates	Each	1		1
Preformed Joint Strip Seal	Foot	539		539
Concrete Sealer	Sq. Ft.		4,489	4,489
Drainage Scuppers, DS-12	Each	17		17
Drainage System No. 2	Each	1		1
Furnishing and Erecting Structural Steel	Pound	2,580		2,580
Settlement Platforms	Each		3	3

INDEX OF SHEETS

SHEET NO.	TITLE
1	General Plan & Elevation 1
2	General Plan & Elevation 2
3	General Notes and Bill of Material
4	Construction Staging 1
5	Construction Staging 2
6	Construction Staging 3
7	Construction Staging 4
8	Temporary Concrete Barrier
9	Top of Slab Elevation Plan 1
10	Top of Slab Elevation Plan 2
11	Top of Slab Elevation Plan 3
12	Top of Slab Elevations 1
13	Top of Slab Elevations 2
14	Top of Slab Elevations 3
15	Top of Slab Elevations 4
16	Top of Slab Elevations 5
17	Top of Approach Slab Elevations 1
18	Top of Approach Slab Elevations 2
19	Deck Plan Unit 1
20	Superstructure Details Unit 1
21	Deck Plan Unit 2
22	Superstructure Details Unit 2
23	Deck Plan Unit 3
24	Superstructure Details Unit 3
25	Deck Plan Unit 4
26	Superstructure Details Unit 4
27	Deck Plan Unit 5
28	Superstructure Details Unit 5
29	Deck Plan I Unit 6
30	Deck Plan II Unit 6
31	Superstructure Details I Unit 6
32	Superstructure Details II Unit 6
33	Deck Plan I Unit 7
34	Deck Plan II Unit 7
35	Superstructure Details Unit 7
36	Deck Plan Unit 8
37	Superstructure Details Unit 8
38	Deck Plan Unit 9
39	Superstructure Details Unit 9
40	Deck Cross Section 1
41	Deck Cross Section 2
42	Deck Cross Section 3
43	West Bridge Approach Slab Details 1
44	West Bridge Approach Slab Details 2
45	East Bridge Approach Slab Details 1
46	East Bridge Approach Slab Details 2
47	Preformed Joint Strip Seal
48	Drainage Scupper, DS-12
49	Typical Bent Details 1
50	Typical Bent Details 2
51	Typical Bent Details 3
52	Typical Bent Details 4
53	Typical Bent Details 5
54	Typical Bent Details 6
55	Typical Bent Details 7
56	Typical Bent Details 8
57	Metal Shell Piles
58	Bar Splicer Assembly and Mechanical Splicer Details
59	Soil Borings 1
60	Soil Borings 2
61	Soil Borings 3
62	Soil Borings 4
63	Soil Borings 5
64	Soil Borings 6
65	Soil Borings 7
66	Soil Borings 8
67	Soil Borings 9
68	Soil Borings 10
69	Soil Borings 11
70	Soil Borings 12
71	Soil Borings 13
72	Soil Borings 14
73	Soil Borings 15
74	Soil Borings 16
75	Soil Borings 17
76	Soil Borings 18
77	Soil Borings 19

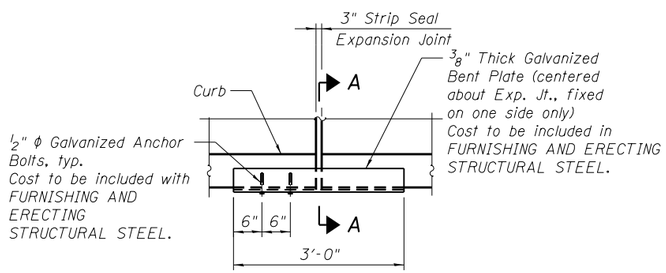

END PLAN OF EXPANSION JOINT DETAILS

Typical at each end of Expansion Joints

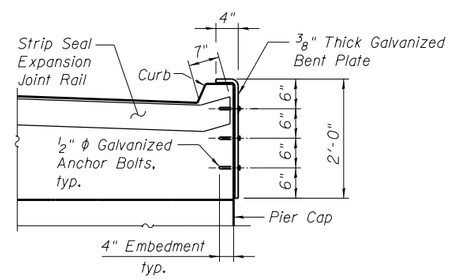

SECTION A-A

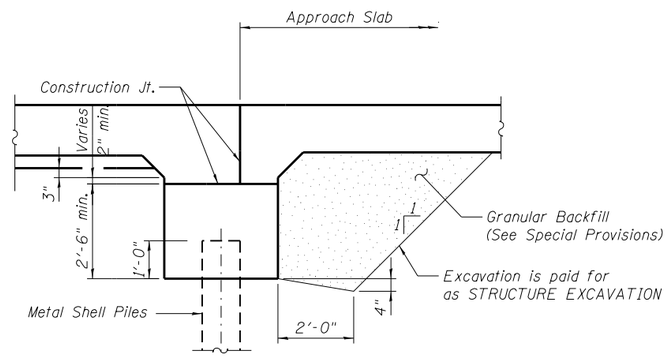

SECTION THRU END PILE BENT CAP

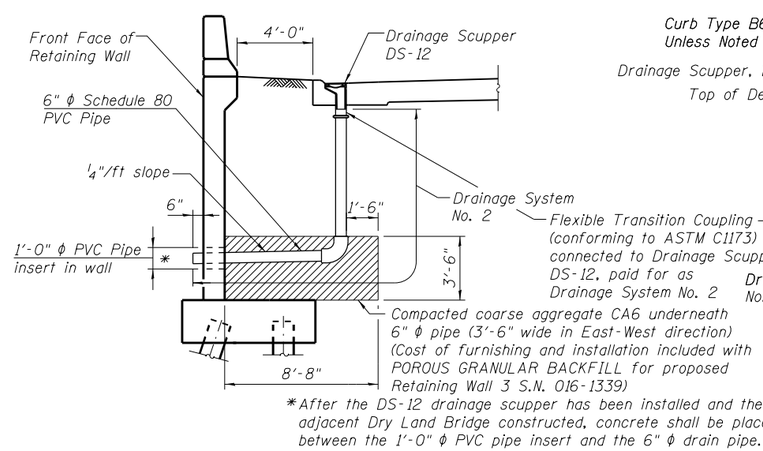

*After the DS-12 drainage scupper has been installed and the adjacent Dry Land Bridge constructed, concrete shall be placed between the 1'-0" ϕ PVC pipe insert and the 6" ϕ drain pipe.

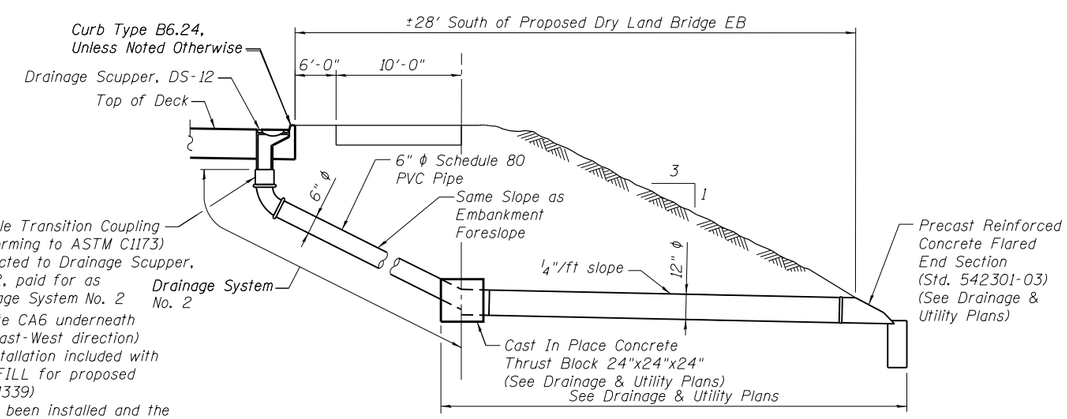

SCUPPER AND DRAINAGE SYSTEM DETAILS

(Looking East)

\\WASCH1\Chicago2\5106-USGS\Struct\dgn\Land Bridges\Land Bridge 2 - 016-D011\016D011-60L72-003-GN.dgn

LOCHNER H. W. LOCHNER, INC. 225 WEST WASHINGTON STREET 12 TH FLOOR CHICAGO, ILLINOIS 60606	USER NAME =	DESIGNED - LJB	REVISED	STATE OF ILLINOIS DEPARTMENT OF TRANSPORTATION	GENERAL NOTES AND BILL OF MATERIAL STRUCTURE NO. 016-D011
	FILE NAME = 016D011-60L72-003-GN.dgn	CHECKED - RH	REVISED		
	PLOT SCALE =	DRAWN - EF	REVISED		
	PLOT DATE =	CHECKED - RH	REVISED		SHEET NO. 3 OF 77 SHEETS

F.A.P. RTE.	SECTION	COUNTY	TOTAL SHEETS	SHEET NO.
351	2010-081-R	COOK	1045	428
		CONTRACT NO. 60L72		
		ILLINOIS FED. AID PROJECT		

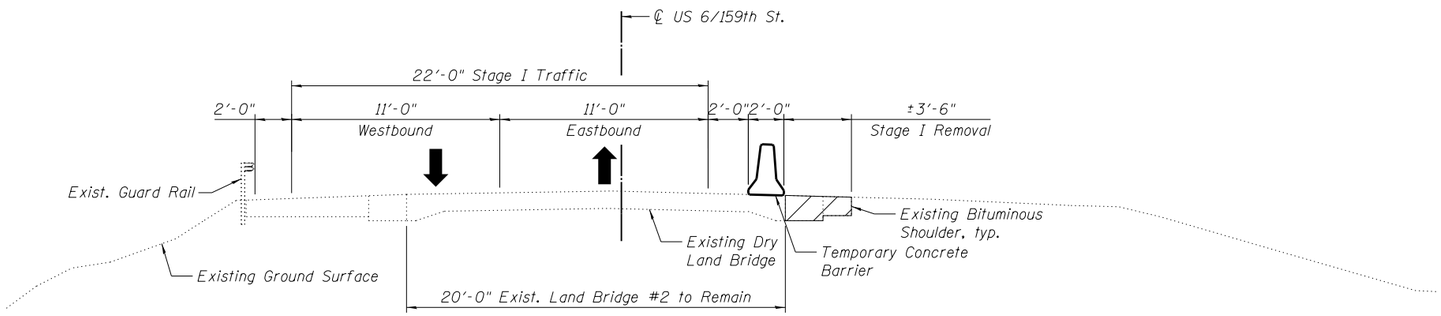

STAGE I REMOVAL

(Looking East)

Dry land bridge segment between Sta. 386+15.08 and Sta. 386+84.92 as shown. Other dry land bridge segments similar. See Cross Sections in details on Sheets 40 thru 42.

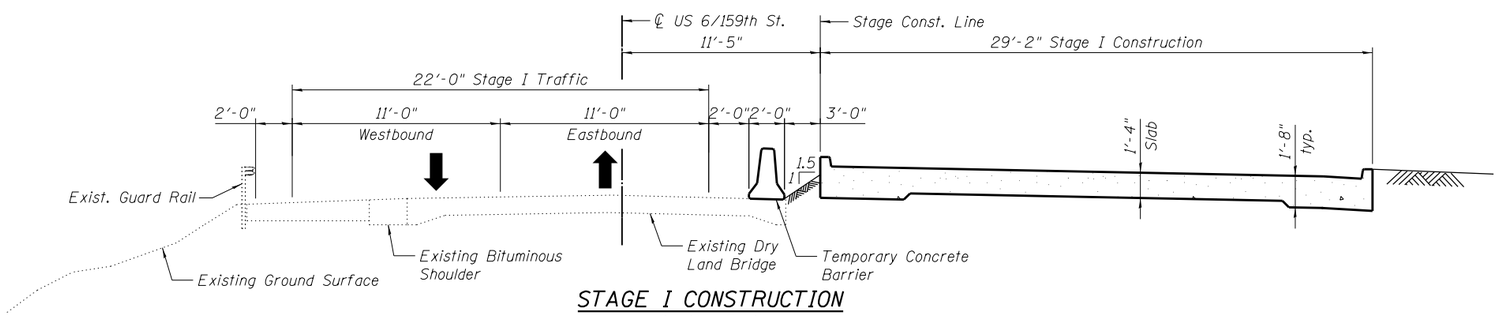

STAGE I CONSTRUCTION

(Looking East)

Dry land bridge segment between Sta. 386+15.08 and Sta. 386+84.92 as shown. Other dry land bridge segments similar. See Cross Sections in details on Sheets 40 thru 42.

LEGEND

Existing Structure Removal

\\MASCH1\Chicago2\5106-USS\Struct\dgn\Land Bridges\Land Bridge 2 - 016-D011\016D011-60L72-004-MD.dgn

LOCHNER H. W. LOCHNER, INC. 225 WEST WASHINGTON STREET 12 TH FLOOR CHICAGO, ILLINOIS 60606	USER NAME =	DESIGNED - LJB	REVISED	STATE OF ILLINOIS DEPARTMENT OF TRANSPORTATION	CONSTRUCTION STAGING 1 STRUCTURE NO. 016–D011	F.A.P. RTE.	SECTION	COUNTY	TOTAL SHEETS / SHEET NO.
	FILE NAME = 016D011-60L72-004-MD.dgn	CHECKED - RH	REVISED			351	2010-081-R	COOK	1045 / 429
	PLOT SCALE =	DRAWN - LJB	REVISED					CONTRACT NO. 60L72	
	PLOT DATE =	CHECKED - RH	REVISED		SHEET NO. 4 OF 77 SHEETS		ILLINOIS	FED. AID PROJECT	

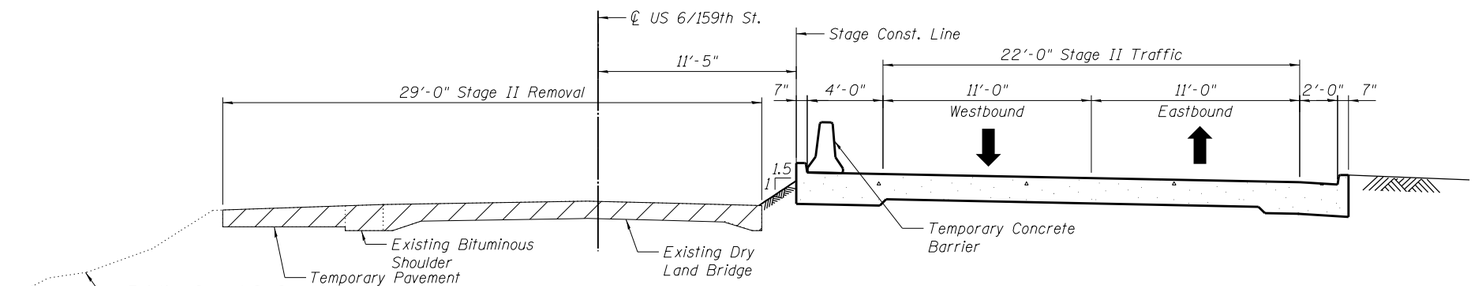

STAGE II REMOVAL

(Looking East)

Dry land bridge segment between Sta. 386+15.08 and Sta. 386+84.92 as shown. Other dry land bridge segments similar. See Cross Sections in details on Sheets 40 thru 42.

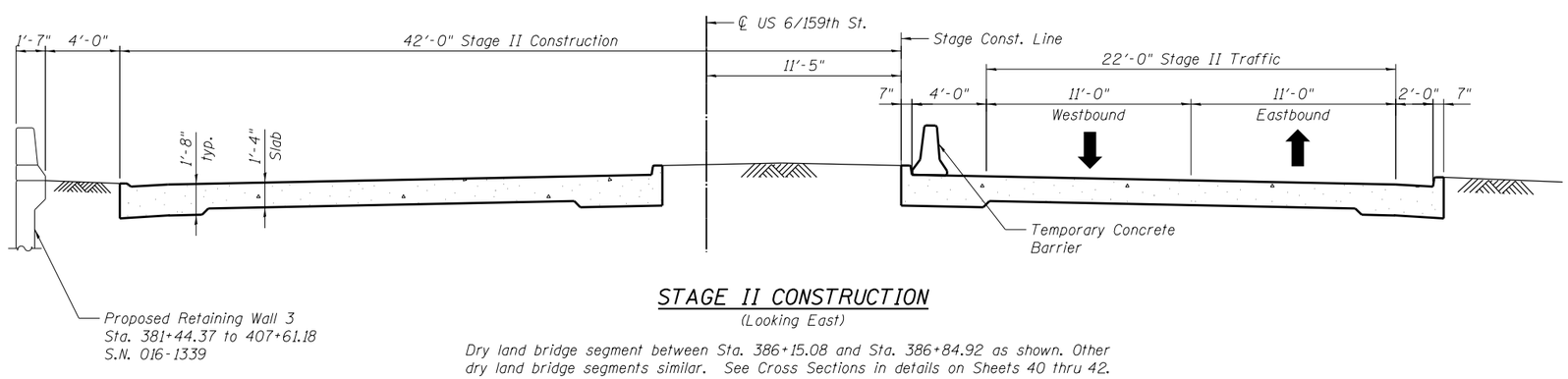

STAGE II CONSTRUCTION

(Looking East)

Dry land bridge segment between Sta. 386+15.08 and Sta. 386+84.92 as shown. Other dry land bridge segments similar. See Cross Sections in details on Sheets 40 thru 42.

LEGEND

Existing Structure Removal

\\MASCH1\Chicago2\5106-USS\Struct\dgn\Land Bridges\Land Bridge 2 - 016-D011\016D011-60L72-005-MD.dgn

LOCHNER H. W. LOCHNER, INC. 225 WEST WASHINGTON STREET 12 TH FLOOR CHICAGO, ILLINOIS 60606	USER NAME =	DESIGNED - LJB	REVISED	STATE OF ILLINOIS DEPARTMENT OF TRANSPORTATION	CONSTRUCTION STAGING 2 STRUCTURE NO. 016–D011	F.A.P. RTE. 351	SECTION 2010-081-R	COUNTY COOK / TOTAL SHEETS 1045 / SHEET NO. 430
	FILE NAME = 016D011-60L72-005-MD.dgn	CHECKED - RH	REVISED					CONTRACT NO. 60L72
	PLOT SCALE =	DRAWN - LJB	REVISED					
	PLOT DATE =	CHECKED - RH	REVISED		SHEET NO. 5 OF 77 SHEETS		ILLINOIS FED. AID PROJECT	

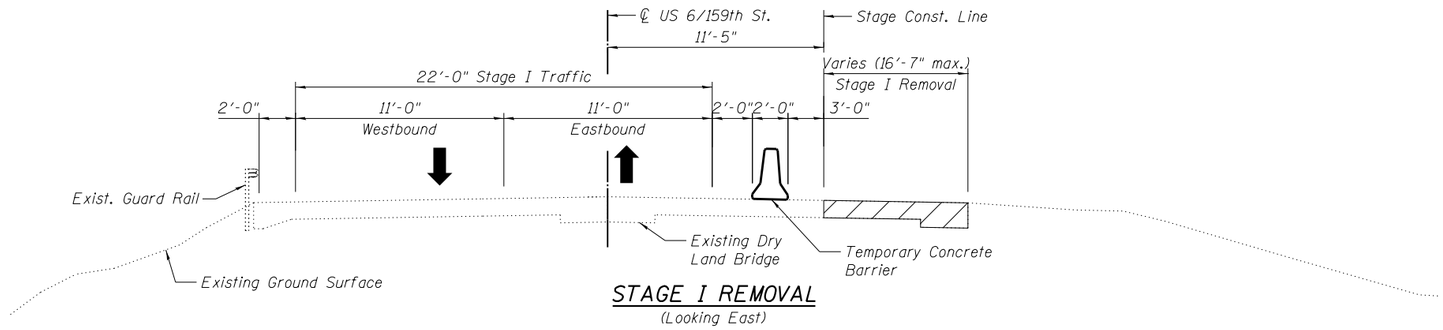

STAGE I REMOVAL

(Looking East)

Dry land bridge segment between Sta. 382+04.55 and Sta. 382+31.51 as shown. See Cross Sections in details on Sheet 40.

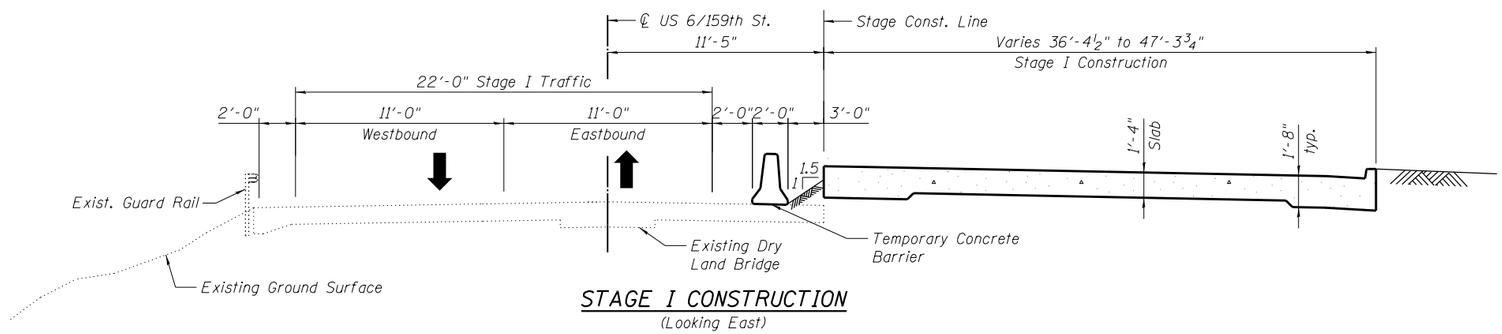

STAGE I CONSTRUCTION

(Looking East)

Dry land bridge segment between Sta. 382+04.55 and Sta. 382+31.51 as shown. See Cross Sections in details on Sheet 40.

LEGEND

Existing Structure Removal

\\MASCH1\Chicago2\5106-USS\Struct\dgn\Land Bridges\Land Bridge 2 - 016-D011\016D011-60L72-006-MD.dgn

LOCHNER H. W. LOCHNER, INC. 225 WEST WASHINGTON STREET 12 TH FLOOR CHICAGO, ILLINOIS 60606	USER NAME =	DESIGNED - LJB	REVISED	STATE OF ILLINOIS DEPARTMENT OF TRANSPORTATION	CONSTRUCTION STAGING 3 STRUCTURE NO. 016-D011	F.A.P. RTE.	SECTION	COUNTY	TOTAL SHEETS / SHEET NO.
	FILE NAME = 016D011-60L72-006-MD.dgn	CHECKED - RH	REVISED			351	2010-081-R	COOK	1045 / 431
	PLOT SCALE =	DRAWN - LJB	REVISED					CONTRACT NO. 60L72	
	PLOT DATE =	CHECKED - RH	REVISED		SHEET NO. 6 OF 77 SHEETS		ILLINOIS	FED. AID PROJECT	

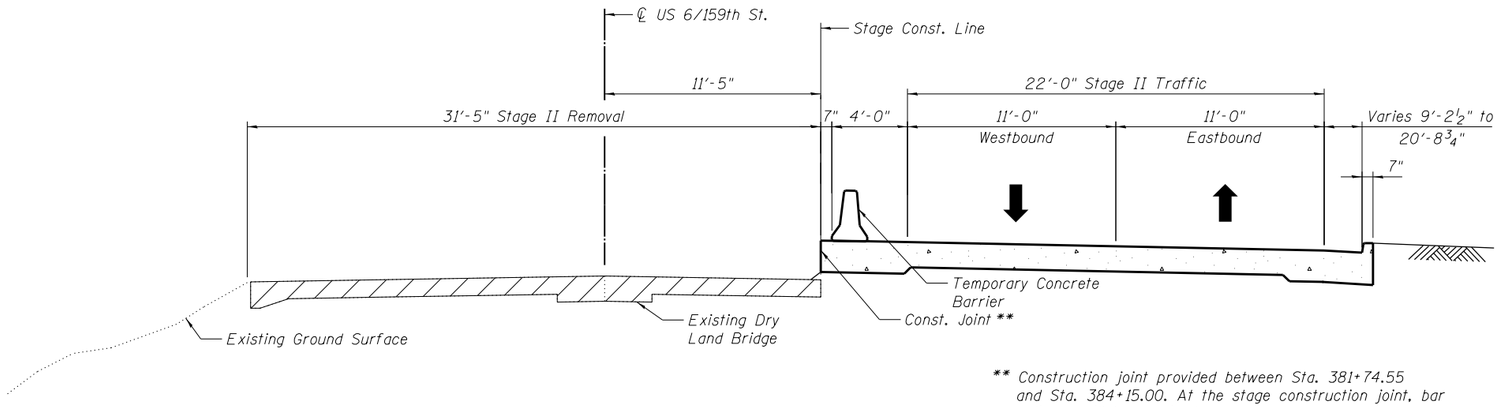

** Construction joint provided between Sta. 381+74.55 and Sta. 384+15.00. At the stage construction joint, bar splicers will be required.

STAGE II REMOVAL

(Looking East)

Dry land bridge segment between Sta. 382+04.55 and Sta. 382+31.51 as shown. See Cross Sections in details on Sheet 40.

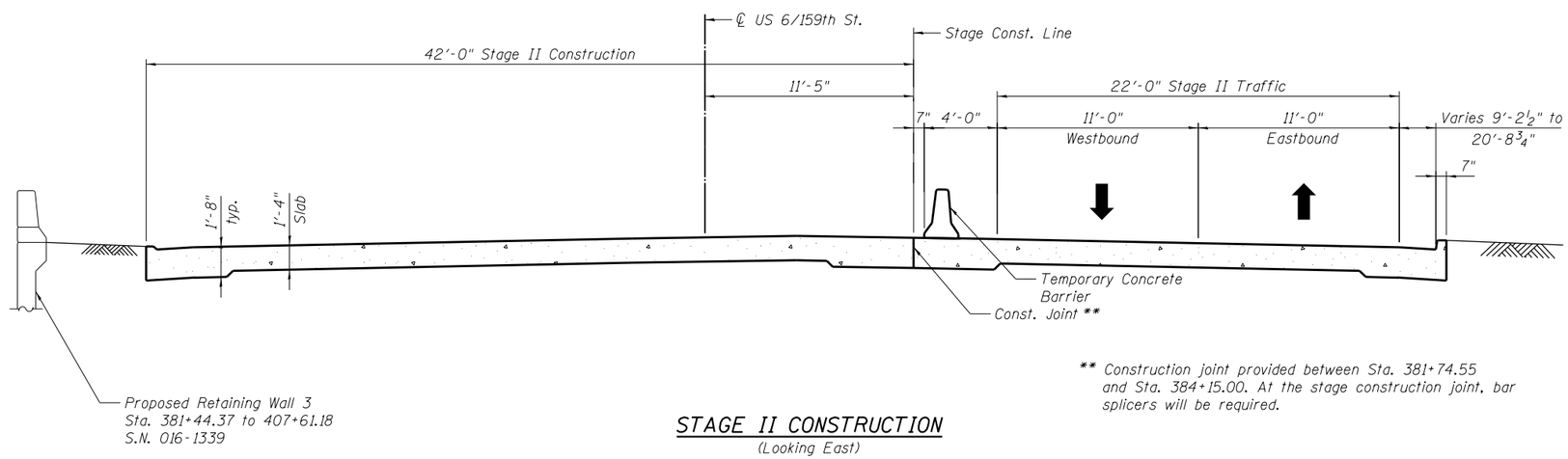

** Construction joint provided between Sta. 381+74.55 and Sta. 384+15.00. At the stage construction joint, bar splicers will be required.

STAGE II CONSTRUCTION

(Looking East)

Dry land bridge segment between Sta. 382+04.55 and Sta. 382+31.51 as shown. See Cross Sections in details on Sheet 40.

LEGEND

Existing Structure Removal

\\MASCH1\Chicago2\5106-USB\Struct\dgn\Land Bridges\Land Bridge 2 - 016-D011\016D011-60L72-007-MD.dgn

LOCHNER H. W. LOCHNER, INC. 225 WEST WASHINGTON STREET 12 TH FLOOR CHICAGO, ILLINOIS 60606	USER NAME =	DESIGNED - LJB	REVISED	STATE OF ILLINOIS DEPARTMENT OF TRANSPORTATION	CONSTRUCTION STAGING 4 STRUCTURE NO. 016-D011	F.A.P. RTE.	SECTION	COUNTY	TOTAL SHEETS / SHEET NO.
	FILE NAME = 016D011-60L72-007-MD.dgn	CHECKED - RH	REVISED			351	2010-081-R	COOK	1045 / 432
	PLOT SCALE =	DRAWN - LJB	REVISED					CONTRACT NO. 60L72	
	PLOT DATE =	CHECKED - RH	REVISED		SHEET NO. 7 OF 77 SHEETS		ILLINOIS	FED. AID PROJECT	

When "A" is 3'-6" or less, the temporary concrete barrier shall be anchored to the new slab according to Detail I or Detail II. No anchorage is required when "A" is greater than 3'-6".

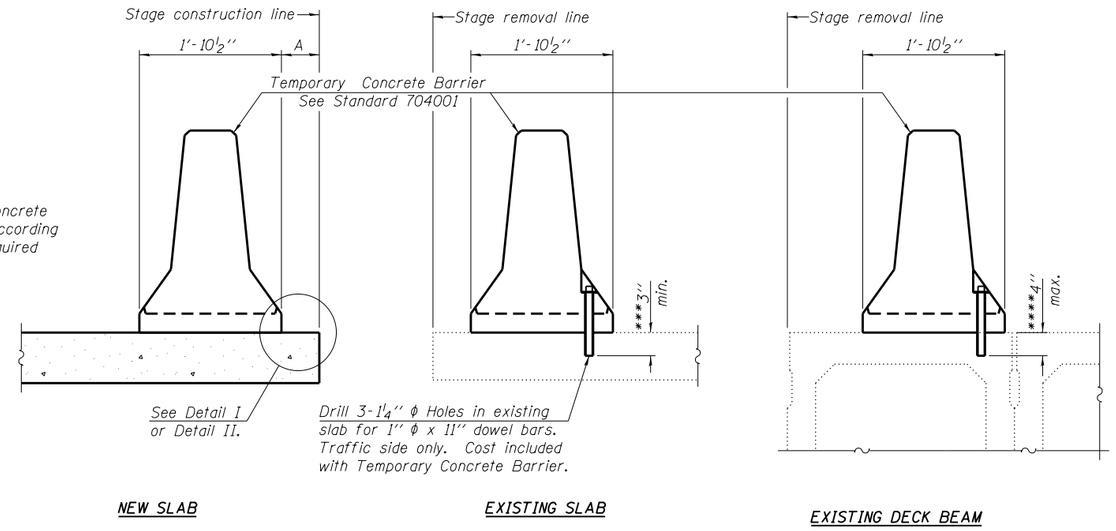

SECTIONS THRU SLAB OR DECK BEAM

NOTES

Detail I - With Bar Splicer or Couplers:
Connect one (1) 1'' x 7' 'x ''W'' steel PL to the top layer of couplers with 2-⅝'' ϕ bolts screwed to coupler at approximate ℄ of each barrier panel.

Detail II - With Extended Reinforcement Bars:
Connect one (1) 1'' x 7'' x ''W'' steel PL to the concrete slab or concrete wearing surface with 2-⅝'' ϕ Expansion Anchors or cast in place inserts spaced between the top layer of reinforcement at approximate ℄ of each barrier panel.

Cost of anchorage is included with Temporary Concrete Barrier.

The 1'' x 7'' x ''W'' plate shall not be removed until stage II construction forms and all reinforcement bars are in place and the concrete is ready to be placed.

*** Dimension shown is minimum required embedment into concrete. If hot-mix asphalt wearing surface is present, minimum embedment shall be in addition to wearing surface depth.

**** If existing deck beam is to remain in place after stage construction, embedment shall only be into wearing surface and not into existing deck beam concrete.

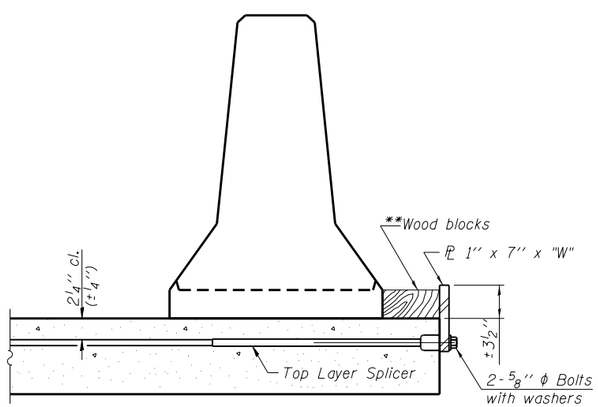

DETAIL I

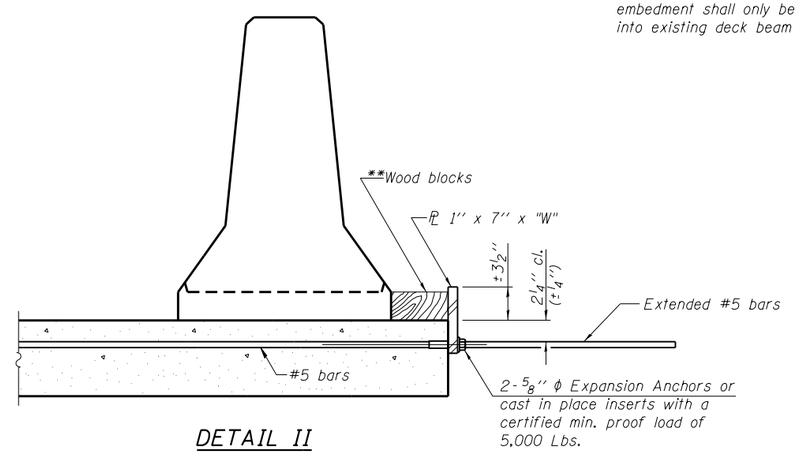

DETAIL II

** Wood blocks may be omitted when required to provide minimum stage traffic lane width. When the wood blocks are omitted, the concrete barrier shall be in direct contact with the steel retainer plate.

"W" = Top bars spacing + 4''

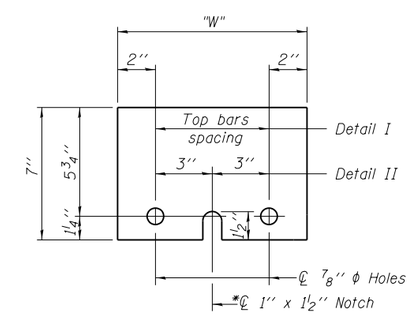

STEEL RETAINER PL 1'' x 7'' x ''W''

* Required only with Detail II

R-27 7-1-10

LOCHNER	USER NAME =	DESIGNED - LJB	REVISED	STATE OF ILLINOIS DEPARTMENT OF TRANSPORTATION	TEMPORARY CONCRETE BARRIER STRUCTURE NO. 016-D011	F.A.P. RTE.	SECTION	COUNTY	TOTAL SHEETS	SHEET NO.
H. W. LOCHNER, INC. 225 WEST WASHINGTON STREET 12 TH FLOOR CHICAGO, ILLINOIS 60606	FILE NAME = 016D011-60L72-008-TC.dgn	CHECKED - RH	REVISED			351	2010-081-R	COOK	1045	433
	PLOT SCALE =	DRAWN - EF	REVISED		SHEET NO. 8 OF 77 SHEETS			CONTRACT NO. 60L72		
	PLOT DATE =	CHECKED - RH	REVISED				ILLINOIS FED. AID PROJECT			

\\MGCHI\Chicago2\5106-US6\Struct\dgn\Land Bridges\Land Bridge 2 - 016-D011\016D011-60L72-008-TC.dgn

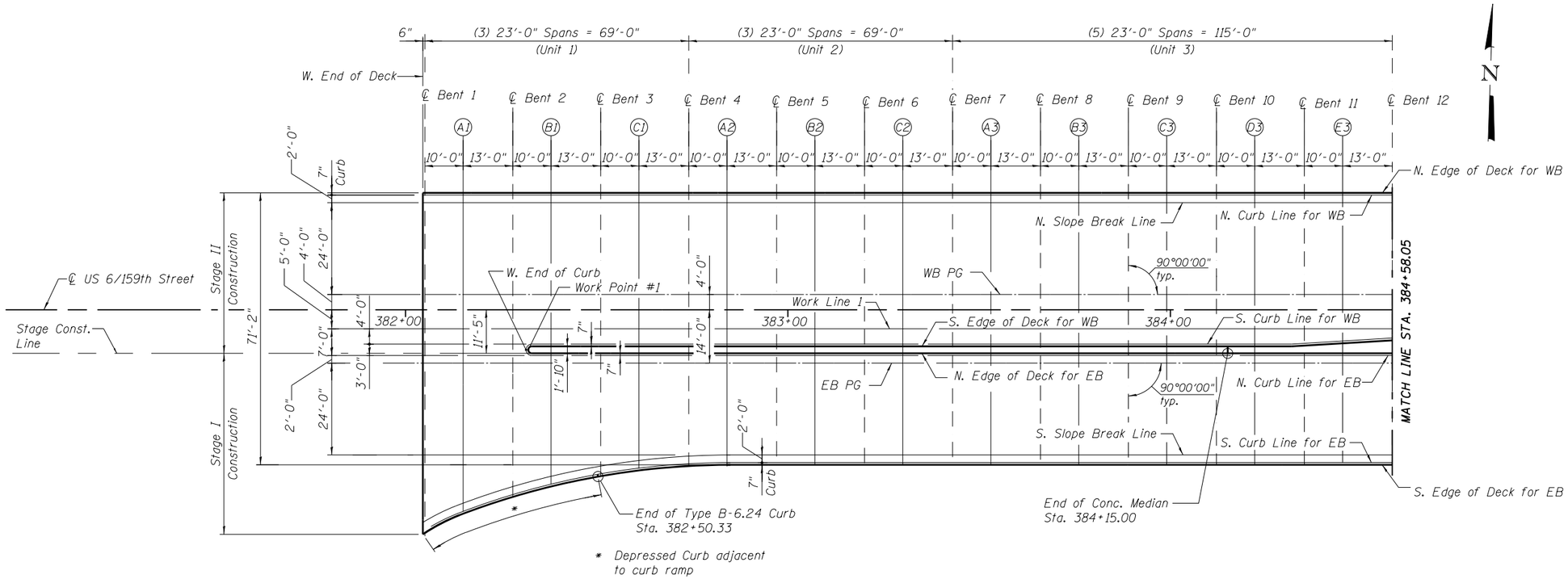

PARTIAL PLAN DECK UNITS - DRY LAND BRIDGE 2

Unit 1, Unit 2 & Unit 3

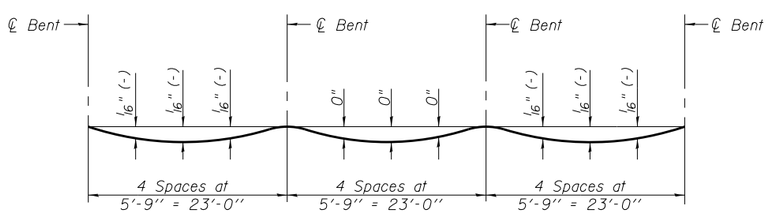

DEAD LOAD DEFLECTION DIAGRAM

(Includes weight of concrete).
(For 3-Span units - Unit 1 & Unit 2).

Note:
The above deflections are not to be used in the field if the engineer is working from the grade elevations adjusted for dead load deflections as shown on Sheet 12 thru 16 of 77.

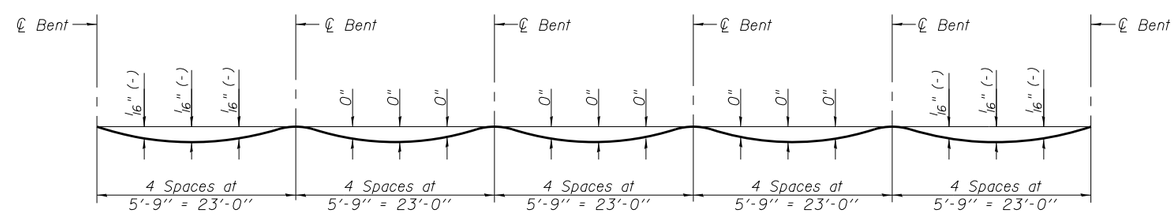

DEAD LOAD DEFLECTION DIAGRAM

(Includes weight of concrete).
(For 5-Span units - Unit 3).

Note:
The above deflections are not to be used in the field if the engineer is working from the grade elevations adjusted for dead load deflections as shown on Sheet 12 thru 16 of 77.

\\MGCH\Chicago2\5186-USS\Struct\dgn\Land Bridges\Land Bridge 2 - 016-D011\016D011-60L72-009-EL.dgn

LOCHNER H. W. LOCHNER, INC. 225 WEST WASHINGTON STREET 12 TH FLOOR CHICAGO, ILLINOIS 60606	USER NAME =	DESIGNED - RH	REVISED
	FILE NAME = 016D011-60L72-009-EL.dgn	CHECKED - RAB	REVISED
	PLOT SCALE =	DRAWN - EF	REVISED
	PLOT DATE =	CHECKED - RAB	REVISED

STATE OF ILLINOIS
DEPARTMENT OF TRANSPORTATION

TOP OF SLAB ELEVATION PLAN 1
STRUCTURE NO. 016-D011

SHEET NO. 9 OF 77 SHEETS

F.A.P. RTE.	SECTION	COUNTY	TOTAL SHEETS	SHEET NO.
351	2010-081-R	COOK	1045	434
		CONTRACT NO. 60L72		
		ILLINOIS FED. AID PROJECT		

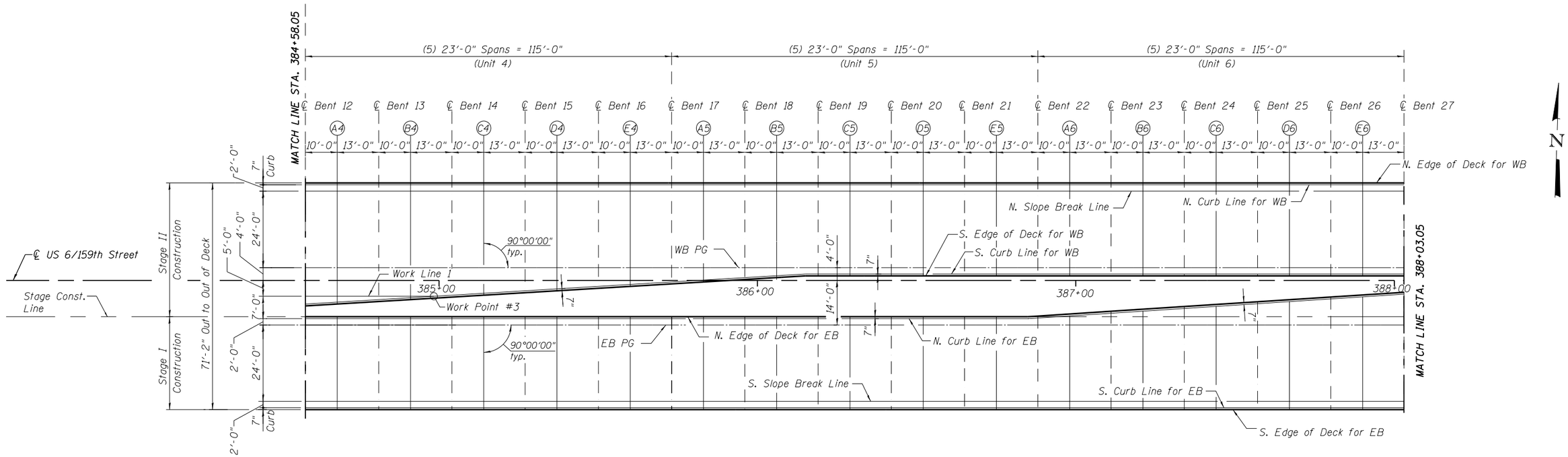

PARTIAL PLAN DECK UNITS - DRY LAND BRIDGE 2

Unit 4, Unit 5 & Unit 6

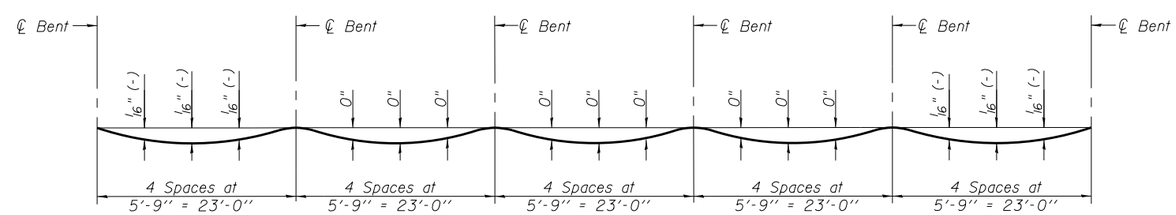

DEAD LOAD DEFLECTION DIAGRAM

(Includes weight of concrete).
(For 5-Span units - Unit 4, Unit 5 & Unit 6).

Note:
The above deflections are not to be used in the field if the engineer is working from the grade elevations adjusted for dead load deflections as shown on Sheet 12 thru 16 of 77.

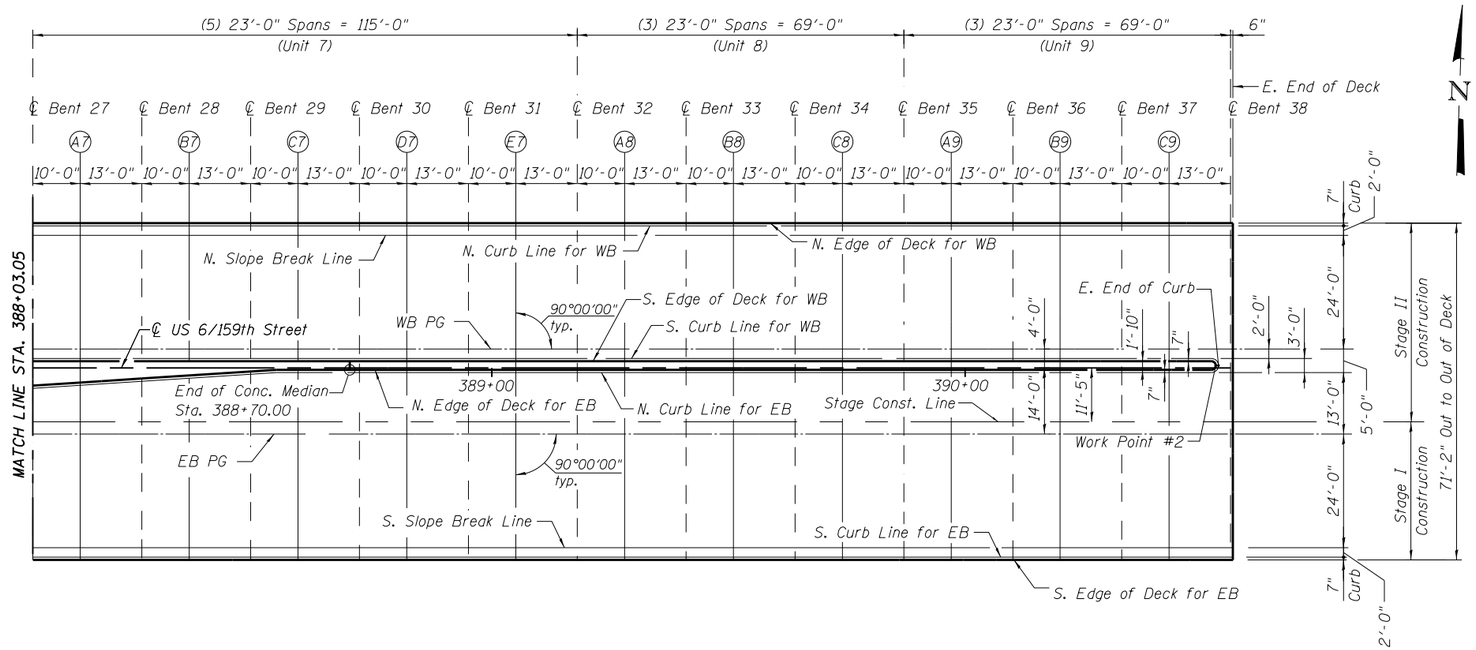

PARTIAL PLAN DECK UNITS - DRY LAND BRIDGE 2

Unit 7, Unit 8 & Unit 9

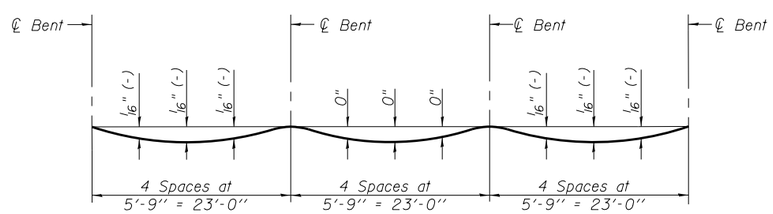

DEAD LOAD DEFLECTION DIAGRAM

(Includes weight of concrete).
(For 3-Span units - Unit 8 & Unit 9).

Note:
The above deflections are not to be used in the field if the engineer is working from the grade elevations adjusted for dead load deflections as shown on Sheet 12 thru 16 of 77.

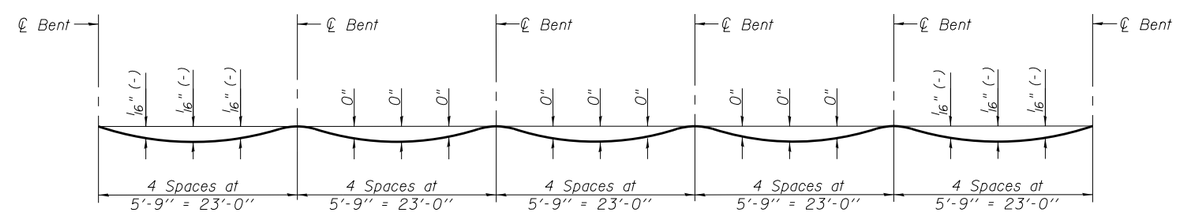

DEAD LOAD DEFLECTION DIAGRAM

(Includes weight of concrete).
(For 5-Span unit - Unit 7)

Note:
The above deflections are not to be used in the field if the engineer is working from the grade elevations adjusted for dead load deflections as shown on Sheet 12 thru 16 of 77.

\\MASCH1\Chicago2\5106-USS\Struct\dgn\Land Bridges\Land Bridge 2 - 016-D011\016D011-60L72-011-EL.dgn

LOCHNER H. W. LOCHNER, INC. 225 WEST WASHINGTON STREET 12 TH FLOOR CHICAGO, ILLINOIS 60606	USER NAME =	DESIGNED - RH	REVISED	STATE OF ILLINOIS DEPARTMENT OF TRANSPORTATION	TOP OF SLAB ELEVATION PLAN 3 STRUCTURE NO. 016-D011	F.A.P. RTE.	SECTION	COUNTY	TOTAL SHEETS / SHEET NO.
	FILE NAME = 016D011-60L72-011-EL.dgn	CHECKED - RAB	REVISED			351	2010-081-R	COOK	1045 / 436
	PLOT SCALE =	DRAWN - EF	REVISED					CONTRACT NO. 60L72	
	PLOT DATE =	CHECKED - RAB	REVISED		SHEET NO. 11 OF 77 SHEETS		ILLINOIS	FED. AID PROJECT	

NORTH EDGE OF DECK FOR WB

Location	Station	Offset	Theoretical Grade Elevations	Theoretical Grade Elevations Adjusted For Dead Load Deflection
W. End of Deck	382+04.55	-30.58	689.48	689.48
℄ Bent 1	382+05.05	-30.58	689.47	689.47
A1	382+15.05	-30.58	689.41	689.41
℄ Bent 2	382+28.05	-30.58	689.33	689.33
B1	382+38.05	-30.58	689.25	689.25
℄ Bent 3	382+51.05	-30.58	689.15	689.15
C1	382+61.05	-30.58	689.06	689.06
℄ Bent 4	382+74.05	-30.58	688.94	688.94
A2	382+84.05	-30.58	688.85	688.85
℄ Bent 5	382+97.05	-30.58	688.72	688.72
B2	383+07.05	-30.58	688.62	688.62
℄ Bent 6	383+20.05	-30.58	688.49	688.49
C2	383+30.05	-30.58	688.39	688.39
℄ Bent 7	383+43.05	-30.58	688.26	688.26
A3	383+53.05	-30.58	688.16	688.16
℄ Bent 8	383+66.05	-30.58	688.03	688.03
B3	383+76.05	-30.58	687.94	687.94
℄ Bent 9	383+89.05	-30.58	687.81	687.81
C3	383+99.05	-30.58	687.71	687.71
℄ Bent 10	384+12.05	-30.58	687.59	687.59
D3	384+22.05	-30.58	687.51	687.51
℄ Bent 11	384+35.05	-30.58	687.42	687.42
E3	384+45.05	-30.58	687.36	687.36
℄ Bent 12	384+58.05	-30.58	687.29	687.29
A4	384+68.05	-30.58	687.24	687.24
℄ Bent 13	384+81.05	-30.58	687.20	687.20
B4	384+91.05	-30.58	687.17	687.17
℄ Bent 14	385+04.05	-30.58	687.15	687.15
C4	385+14.05	-30.58	687.15	687.15
℄ Bent 15	385+27.05	-30.58	687.15	687.15
D4	385+37.05	-30.58	687.17	687.17
℄ Bent 16	385+50.05	-30.58	687.20	687.20
E4	385+60.05	-30.58	687.23	687.23
℄ Bent 17	385+73.05	-30.58	687.28	687.28
A5	385+83.05	-30.58	687.32	687.32
℄ Bent 18	385+96.05	-30.58	687.37	687.37
B5	386+06.05	-30.58	687.41	687.41
℄ Bent 19	386+19.05	-30.58	687.46	687.46
C5	386+29.05	-30.58	687.50	687.50
℄ Bent 20	386+42.05	-30.58	687.55	687.55
D5	386+52.05	-30.58	687.59	687.59
℄ Bent 21	386+65.05	-30.58	687.65	687.65
E5	386+75.05	-30.58	687.69	687.69
℄ Bent 22	386+88.05	-30.58	687.74	687.74
A6	386+98.05	-30.58	687.78	687.78
℄ Bent 23	387+11.05	-30.58	687.83	687.83
B6	387+21.05	-30.58	687.87	687.87
℄ Bent 24	387+34.05	-30.58	687.92	687.92
C6	387+44.05	-30.58	687.96	687.96
℄ Bent 25	387+57.05	-30.58	688.01	688.01
D6	387+67.05	-30.58	688.05	688.05
℄ Bent 26	387+80.05	-30.58	688.11	688.11
E6	387+90.05	-30.58	688.15	688.15
℄ Bent 27	388+03.05	-30.58	688.20	688.20
A7	388+13.05	-30.58	688.24	688.24
℄ Bent 28	388+26.05	-30.58	688.29	688.29
B7	388+36.05	-30.58	688.33	688.33
℄ Bent 29	388+49.05	-30.58	688.38	688.38
C7	388+59.05	-30.58	688.42	688.42
℄ Bent 30	388+72.05	-30.58	688.47	688.47
D7	388+82.05	-30.58	688.51	688.51
℄ Bent 31	388+95.05	-30.58	688.57	688.57
E7	389+05.05	-30.58	688.61	688.61
℄ Bent 32	389+18.05	-30.58	688.66	688.66
A8	389+28.05	-30.58	688.70	688.70
℄ Bent 33	389+41.05	-30.58	688.75	688.75
B8	389+51.05	-30.58	688.79	688.79
℄ Bent 34	389+64.05	-30.58	688.84	688.84
C8	389+74.05	-30.58	688.88	688.88
℄ Bent 35	389+87.05	-30.58	688.93	688.93
A9	389+97.05	-30.58	688.97	688.97
℄ Bent 36	390+10.05	-30.58	689.03	689.03
B9	390+20.05	-30.58	689.07	689.07
℄ Bent 37	390+33.05	-30.58	689.12	689.12
C9	390+43.05	-30.58	689.16	689.16
℄ Bent 38	390+56.05	-30.58	689.21	689.21
E. End of Deck	390+56.55	-30.58	689.21	689.21

NORTH CURB LINE FOR WB

Location	Station	Offset	Theoretical Grade Elevations	Theoretical Grade Elevations Adjusted For Dead Load Deflection
W. End of Deck	382+04.55	-30.00	689.31	689.31
℄ Bent 1	382+05.05	-30.00	689.31	689.31
A1	382+15.05	-30.00	689.25	689.25
℄ Bent 2	382+28.05	-30.00	689.16	689.16
B1	382+38.05	-30.00	689.09	689.09
℄ Bent 3	382+51.05	-30.00	688.98	688.98
C1	382+61.05	-30.00	688.89	688.89
℄ Bent 4	382+74.05	-30.00	688.77	688.77
A2	382+84.05	-30.00	688.68	688.68
℄ Bent 5	382+97.05	-30.00	688.55	688.55
B2	383+07.05	-30.00	688.45	688.45
℄ Bent 6	383+20.05	-30.00	688.32	688.32
C2	383+30.05	-30.00	688.22	688.22
℄ Bent 7	383+43.05	-30.00	688.10	688.10
A3	383+53.05	-30.00	688.00	688.00
℄ Bent 8	383+66.05	-30.00	687.87	687.87
B3	383+76.05	-30.00	687.77	687.77
℄ Bent 9	383+89.05	-30.00	687.64	687.64
C3	383+99.05	-30.00	687.54	687.54
℄ Bent 10	384+12.05	-30.00	687.42	687.42
D3	384+22.05	-30.00	687.34	687.34
℄ Bent 11	384+35.05	-30.00	687.25	687.25
E3	384+45.05	-30.00	687.19	687.19
℄ Bent 12	384+58.05	-30.00	687.12	687.12
A4	384+68.05	-30.00	687.08	687.08
℄ Bent 13	384+81.05	-30.00	687.03	687.03
B4	384+91.05	-30.00	687.01	687.01
℄ Bent 14	385+04.05	-30.00	686.99	686.99
C4	385+14.05	-30.00	686.98	686.98
℄ Bent 15	385+27.05	-30.00	686.99	686.99
D4	385+37.05	-30.00	687.00	687.00
℄ Bent 16	385+50.05	-30.00	687.03	687.03
E4	385+60.05	-30.00	687.06	687.06
℄ Bent 17	385+73.05	-30.00	687.11	687.11
A5	385+83.05	-30.00	687.15	687.15
℄ Bent 18	385+96.05	-30.00	687.20	687.20
B5	386+06.05	-30.00	687.24	687.24
℄ Bent 19	386+19.05	-30.00	687.30	687.30
C5	386+29.05	-30.00	687.34	687.34
℄ Bent 20	386+42.05	-30.00	687.39	687.39
D5	386+52.05	-30.00	687.43	687.43
℄ Bent 21	386+65.05	-30.00	687.48	687.48
E5	386+75.05	-30.00	687.52	687.52
℄ Bent 22	386+88.05	-30.00	687.57	687.57
A6	386+98.05	-30.00	687.61	687.61
℄ Bent 23	387+11.05	-30.00	687.66	687.66
B6	387+21.05	-30.00	687.70	687.70
℄ Bent 24	387+34.05	-30.00	687.76	687.76
C6	387+44.05	-30.00	687.80	687.80
℄ Bent 25	387+57.05	-30.00	687.85	687.85
D6	387+67.05	-30.00	687.89	687.89
℄ Bent 26	387+80.05	-30.00	687.94	687.94
E6	387+90.05	-30.00	687.98	687.98
℄ Bent 27	388+03.05	-30.00	688.03	688.03
A7	388+13.05	-30.00	688.07	688.07
℄ Bent 28	388+26.05	-30.00	688.12	688.12
B7	388+36.05	-30.00	688.16	688.16
℄ Bent 29	388+49.05	-30.00	688.22	688.22
C7	388+59.05	-30.00	688.26	688.26
℄ Bent 30	388+72.05	-30.00	688.31	688.31
D7	388+82.05	-30.00	688.35	688.35
℄ Bent 31	388+95.05	-30.00	688.40	688.40
E7	389+05.05	-30.00	688.44	688.44
℄ Bent 32	389+18.05	-30.00	688.49	688.49
A8	389+28.05	-30.00	688.53	688.53
℄ Bent 33	389+41.05	-30.00	688.58	688.58
B8	389+51.05	-30.00	688.62	688.62
℄ Bent 34	389+64.05	-30.00	688.68	688.68
C8	389+74.05	-30.00	688.72	688.72
℄ Bent 35	389+87.05	-30.00	688.77	688.77
A9	389+97.05	-30.00	688.81	688.81
℄ Bent 36	390+10.05	-30.00	688.86	688.86
B9	390+20.05	-30.00	688.90	688.90
℄ Bent 37	390+33.05	-30.00	688.95	688.95
C9	390+43.05	-30.00	688.99	688.99
℄ Bent 38	390+56.05	-30.00	689.04	689.04
E. End of Deck	390+56.55	-30.00	689.05	689.05

NORTH SLOPE BREAK LINE

Location	Station	Offset	Theoretical Grade Elevations	Theoretical Grade Elevations Adjusted For Dead Load Deflection
W. End of Deck	382+04.55	-28.00	689.43	689.43
℄ Bent 1	382+05.05	-28.00	689.43	689.43
A1	382+15.05	-28.00	689.37	689.37
℄ Bent 2	382+28.05	-28.00	689.28	689.28
B1	382+38.05	-28.00	689.21	689.21
℄ Bent 3	382+51.05	-28.00	689.10	689.10
C1	382+61.05	-28.00	689.01	689.01
℄ Bent 4	382+74.05	-28.00	688.89	688.89
A2	382+84.05	-28.00	688.80	688.80
℄ Bent 5	382+97.05	-28.00	688.67	688.67
B2	383+07.05	-28.00	688.57	688.57
℄ Bent 6	383+20.05	-28.00	688.44	688.44
C2	383+30.05	-28.00	688.34	688.34
℄ Bent 7	383+43.05	-28.00	688.22	688.22
A3	383+53.05	-28.00	688.12	688.12
℄ Bent 8	383+66.05	-28.00	687.99	687.99
B3	383+76.05	-28.00	687.89	687.89
℄ Bent 9	383+89.05	-28.00	687.76	687.76
C3	383+99.05	-28.00	687.66	687.66
℄ Bent 10	384+12.05	-28.00	687.54	687.54
D3	384+22.05	-28.00	687.46	687.46
℄ Bent 11	384+35.05	-28.00	687.37	687.37
E3	384+45.05	-28.00	687.31	687.31
℄ Bent 12	384+58.05	-28.00	687.24	687.24
A4	384+68.05	-28.00	687.20	687.20
℄ Bent 13	384+81.05	-28.00	687.15	687.15
B4	384+91.05	-28.00	687.13	687.13
℄ Bent 14	385+04.05	-28.00	687.11	687.11
C4	385+14.05	-28.00	687.10	687.10
℄ Bent 15	385+27.05	-28.00	687.11	687.11
D4	385+37.05	-28.00	687.12	687.12
℄ Bent 16	385+50.05	-28.00	687.15	687.15
E4	385+60.05	-28.00	687.18	687.18
℄ Bent 17	385+73.05	-28.00	687.23	687.23
A5	385+83.05	-28.00	687.27	687.27
℄ Bent 18	385+96.05	-28.00	687.32	687.32
B5	386+06.05	-28.00	687.36	687.36
℄ Bent 19	386+19.05	-28.00	687.42	687.42
C5	386+29.05	-28.00	687.46	687.46
℄ Bent 20	386+42.05	-28.00	687.51	687.51
D5	386+52.05	-28.00	687.55	687.55
℄ Bent 21	386+65.05	-28.00	687.60	687.60
E5	386+75.05	-28.00	687.64	687.64
℄ Bent 22	386+88.05	-28.00	687.69	687.69
A6	386+98.05	-28.00	687.73	687.73
℄ Bent 23	387+11.05	-28.00	687.78	687.78
B6	387+21.05	-28.00	687.82	687.82
℄ Bent 24	387+34.05	-28.00	687.88	687.88
C6	387+44.05	-28.00	687.92	687.92
℄ Bent 25	387+57.05	-28.00	687.97	687.97
D6	387+67.05	-28.00	688.01	688.01
℄ Bent 26	387+80.05	-28.00	688.06	688.06
E6	387+90.05	-28.00	688.10	688.10
℄ Bent 27	388+03.05	-28.00	688.15	688.15
A7	388+13.05	-28.00	688.19	688.19
℄ Bent 28	388+26.05	-28.00	688.24	688.24
B7	388+36.05	-28.00	688.28	688.28
℄ Bent 29	388+49.05	-28.00	688.34	688.34
C7	388+59.05	-28.00	688.38	688.38
℄ Bent 30	388+72.05	-28.00	688.43	688.43
D7	388+82.05	-28.00	688.47	688.47
℄ Bent 31	388+95.05	-28.00	688.52	688.52
E7	389+05.05	-28.00	688.56	688.56
℄ Bent 32	389+18.05	-28.00	688.61	688.61
A8	389+28.05	-28.00	688.65	688.65
℄ Bent 33	389+41.05	-28.00	688.70	688.70
B8	389+51.05	-28.00	688.74	688.74
℄ Bent 34	389+64.05	-28.00	688.80	688.80
C8	389+74.05	-28.00	688.84	688.84
℄ Bent 35	389+87.05	-28.00	688.89	688.89
A9	389+97.05	-28.00	688.93	688.93
℄ Bent 36	390+10.05	-28.00	688.98	688.98
B9	390+20.05	-28.00	689.02	689.02
℄ Bent 37	390+33.05	-28.00	689.07	689.07
C9	390+43.05	-28.00	689.11	689.11
℄ Bent 38	390+56.05	-28.00	689.16	689.16
E. End of Deck	390+56.55	-28.00	689.17	689.17

\\IWSCH1\Chicago2\5186-US6\Struct\dgn\Land Bridges\Land Bridge 2 - 016-D011\016D011-60L72-012-EL.dgn

LOCHNER
H. W. LOCHNER, INC.
225 WEST WASHINGTON STREET
12 TH FLOOR
CHICAGO, ILLINOIS 60606

USER NAME =	DESIGNED - RH	REVISED	
FILE NAME = 016D011-60L72-012-EL.dgn	CHECKED - RAB	REVISED	
PLOT SCALE =	DRAWN - EF	REVISED	
PLOT DATE =	CHECKED - RAB	REVISED	

STATE OF ILLINOIS
DEPARTMENT OF TRANSPORTATION

TOP OF SLAB ELEVATIONS 1
STRUCTURE NO. 016-D011

SHEET NO. 12 OF 77 SHEETS

F.A.P. RTE.	SECTION	COUNTY	TOTAL SHEETS	SHEET NO.
351	2010-081-R	COOK	1045	437
		CONTRACT NO. 60L72		
		ILLINOIS FED. AID PROJECT		

WB PG

Location	Station	Offset	Theoretical Grade Elevations	Theoretical Grade Elevations Adjusted For Dead Load Deflection
W. End of Deck	382+04.55	-4.00	689.91	689.91
℄ Bent 1	382+05.05	-4.00	689.91	689.91
A1	382+15.05	-4.00	689.85	689.85
℄ Bent 2	382+28.05	-4.00	689.76	689.76
B1	382+38.05	-4.00	689.69	689.69
℄ Bent 3	382+51.05	-4.00	689.58	689.58
C1	382+61.05	-4.00	689.49	689.49
℄ Bent 4	382+74.05	-4.00	689.37	689.37
A2	382+84.05	-4.00	689.28	689.28
℄ Bent 5	382+97.05	-4.00	689.15	689.15
B2	383+07.05	-4.00	689.05	689.05
℄ Bent 6	383+20.05	-4.00	688.92	688.92
C2	383+30.05	-4.00	688.82	688.82
℄ Bent 7	383+43.05	-4.00	688.70	688.70
A3	383+53.05	-4.00	688.60	688.60
℄ Bent 8	383+66.05	-4.00	688.47	688.47
B3	383+76.05	-4.00	688.37	688.37
℄ Bent 9	383+89.05	-4.00	688.24	688.24
C3	383+99.05	-4.00	688.14	688.14
℄ Bent 10	384+12.05	-4.00	688.02	688.02
D3	384+22.05	-4.00	687.94	687.94
℄ Bent 11	384+35.05	-4.00	687.85	687.85
E3	384+45.05	-4.00	687.79	687.79
℄ Bent 12	384+58.05	-4.00	687.72	687.72
A4	384+68.05	-4.00	687.68	687.68
℄ Bent 13	384+81.05	-4.00	687.63	687.63
B4	384+91.05	-4.00	687.61	687.61
℄ Bent 14	385+04.05	-4.00	687.59	687.59
C4	385+14.05	-4.00	687.58	687.58
℄ Bent 15	385+27.05	-4.00	687.59	687.59
D4	385+37.05	-4.00	687.60	687.60
℄ Bent 16	385+50.05	-4.00	687.63	687.63
E4	385+60.05	-4.00	687.66	687.66
℄ Bent 17	385+73.05	-4.00	687.71	687.71
A5	385+83.05	-4.00	687.75	687.75
℄ Bent 18	385+96.05	-4.00	687.80	687.80
B5	386+06.05	-4.00	687.84	687.84
℄ Bent 19	386+19.05	-4.00	687.90	687.90
C5	386+29.05	-4.00	687.94	687.94
℄ Bent 20	386+42.05	-4.00	687.99	687.99
D5	386+52.05	-4.00	688.03	688.03
℄ Bent 21	386+65.05	-4.00	688.08	688.08
E5	386+75.05	-4.00	688.12	688.12
℄ Bent 22	386+88.05	-4.00	688.17	688.17
A6	386+98.05	-4.00	688.21	688.21
℄ Bent 23	387+11.05	-4.00	688.26	688.26
B6	387+21.05	-4.00	688.30	688.30
℄ Bent 24	387+34.05	-4.00	688.36	688.36
C6	387+44.05	-4.00	688.40	688.40
℄ Bent 25	387+57.05	-4.00	688.45	688.45
D6	387+67.05	-4.00	688.49	688.49
℄ Bent 26	387+80.05	-4.00	688.54	688.54
E6	387+90.05	-4.00	688.58	688.58
℄ Bent 27	388+03.05	-4.00	688.63	688.63
A7	388+13.05	-4.00	688.67	688.67
℄ Bent 28	388+26.05	-4.00	688.72	688.72
B7	388+36.05	-4.00	688.76	688.76
℄ Bent 29	388+49.05	-4.00	688.82	688.82
C7	388+59.05	-4.00	688.86	688.86
℄ Bent 30	388+72.05	-4.00	688.91	688.91
D7	388+82.05	-4.00	688.95	688.95
℄ Bent 31	388+95.05	-4.00	689.00	689.00
E7	389+05.05	-4.00	689.04	689.04
℄ Bent 32	389+18.05	-4.00	689.09	689.09
A8	389+28.05	-4.00	689.13	689.13
℄ Bent 33	389+41.05	-4.00	689.18	689.18
B8	389+51.05	-4.00	689.22	689.22
℄ Bent 34	389+64.05	-4.00	689.28	689.28
C8	389+74.05	-4.00	689.32	689.32
℄ Bent 35	389+87.05	-4.00	689.37	689.37
A9	389+97.05	-4.00	689.41	689.41
℄ Bent 36	390+10.05	-4.00	689.46	689.46
B9	390+20.05	-4.00	689.50	689.50
℄ Bent 37	390+33.05	-4.00	689.55	689.55
C9	390+43.05	-4.00	689.59	689.59
℄ Bent 38	390+56.05	-4.00	689.64	689.64
E. End of Deck	390+56.55	-4.00	689.65	689.65

℄ US 6/159TH STREET

Location	Station	Offset	Theoretical Grade Elevations	Theoretical Grade Elevations Adjusted For Dead Load Deflection
W. End of Deck	382+04.55	0.00	689.97	689.97
℄ Bent 1	382+05.05	0.00	689.97	689.97
A1	382+15.05	0.00	689.91	689.91
℄ Bent 2	382+28.05	0.00	689.82	689.82
B1	382+38.05	0.00	689.75	689.75
℄ Bent 3	382+51.05	0.00	689.64	689.64
C1	382+61.05	0.00	689.55	689.55
℄ Bent 4	382+74.05	0.00	689.43	689.43
A2	382+84.05	0.00	689.34	689.34
℄ Bent 5	382+97.05	0.00	689.21	689.21
B2	383+07.05	0.00	689.11	689.11
℄ Bent 6	383+20.05	0.00	688.98	688.98
C2	383+30.05	0.00	688.88	688.88
℄ Bent 7	383+43.05	0.00	688.76	688.76
A3	383+53.05	0.00	688.66	688.66
℄ Bent 8	383+66.05	0.00	688.53	688.53
B3	383+76.05	0.00	688.43	688.43
℄ Bent 9	383+89.05	0.00	688.30	688.30
C3	383+99.05	0.00	688.20	688.20
℄ Bent 10	384+12.05	0.00	688.08	688.08
D3	384+22.05	0.00	688.00	688.00
℄ Bent 11	384+35.05	0.00	687.91	687.91
E3	384+45.05	0.00	687.85	687.85
℄ Bent 12	384+58.05	0.00	687.78	687.78
A4	384+68.05	0.00	687.74	687.74
℄ Bent 13	384+81.05	0.00	687.69	687.69
B4	384+91.05	0.00	687.67	687.67
℄ Bent 14	385+04.05	0.00	687.65	687.65
C4	385+14.05	0.00	687.64	687.64
℄ Bent 15	385+27.05	0.00	687.65	687.65
D4	385+37.05	0.00	687.66	687.66
℄ Bent 16	385+50.05	0.00	687.69	687.69
E4	385+60.05	0.00	687.72	687.72
℄ Bent 17	385+73.05	0.00	687.77	687.77
A5	385+83.05	0.00	688.31	688.31
℄ Bent 30	388+72.05	0.00	689.60	689.60
D7	388+82.05	0.00	689.64	689.64
℄ Bent 31	388+95.05	0.00	689.70	689.70
E7	389+05.05	0.00	689.74	689.74
℄ Bent 32	389+18.05	0.00	689.79	689.79
A8	389+28.05	0.00	689.83	689.83
℄ Bent 33	389+41.05	0.00	689.88	689.88
B8	389+51.05	0.00	689.92	689.92
℄ Bent 34	389+64.05	0.00	689.97	689.97
C8	389+74.05	0.00	690.01	690.01
℄ Bent 35	389+87.05	0.00	690.06	690.06
A9	389+97.05	0.00	690.10	690.10
℄ Bent 36	390+10.05	0.00	690.16	690.16
B9	390+20.05	0.00	690.20	690.20
℄ Bent 37	390+33.05	0.00	690.25	690.25
C9	390+43.05	0.00	690.29	690.29
℄ Bent 38	390+56.05	0.00	689.70	689.70
E. End of Deck	390+56.55	0.00	689.71	689.71

WORK LINE 1

Location	Station	Offset	Theoretical Grade Elevations	Theoretical Grade Elevations Adjusted For Dead Load Deflection
W. End of Deck	382+04.55	5.00	690.05	690.05
℄ Bent 1	382+05.05	5.00	690.04	690.04
A1	382+15.05	5.00	689.98	689.98
℄ Bent 2	382+28.05	5.00	689.90	689.90
B1	382+38.05	5.00	689.82	689.82
℄ Bent 3	382+51.05	5.00	689.72	689.72
C1	382+61.05	5.00	689.63	689.63
℄ Bent 4	382+74.05	5.00	689.51	689.51
A2	382+84.05	5.00	689.41	689.41
℄ Bent 5	382+97.05	5.00	689.29	689.29
B2	383+07.05	5.00	689.19	689.19
℄ Bent 6	383+20.05	5.00	689.06	689.06
C2	383+30.05	5.00	688.96	688.96
℄ Bent 7	383+43.05	5.00	688.83	688.83
A3	383+53.05	5.00	688.73	688.73
℄ Bent 8	383+66.05	5.00	688.60	688.60
B3	383+76.05	5.00	688.50	688.50
℄ Bent 9	383+89.05	5.00	688.37	688.37
C3	383+99.05	5.00	688.28	688.28
℄ Bent 10	384+12.05	5.00	688.16	688.16
D3	384+22.05	5.00	688.08	688.08
℄ Bent 11	384+35.05	5.00	687.99	687.99
E3	384+45.05	5.00	687.92	687.92
℄ Bent 12	384+58.05	5.00	687.85	687.85
A4	384+68.05	5.00	687.81	687.81
℄ Bent 13	384+81.05	5.00	687.77	687.77
B4	384+91.05	5.00	687.74	687.74
Work Point #3	384+98.39	5.00	687.73	687.73

\\WMSCH1\Chicago2\5186-US6\Struct\dgn\Land Bridges\Land Bridge 2 - 016-D011\016D011-60L72-013-EL.dgn

SOUTH CURB LINE FOR WB

Location	Station	Offset	Theoretical Grade Elevations	Theoretical Grade Elevations Adjusted For Dead Load Deflection
W. End of Curb	382+31.51	10.50	689.98	689.98
B1	382+38.05	9.00	689.88	689.88
℄ Bent 3	382+51.05	9.00	689.78	689.78
C1	382+61.05	9.00	689.69	689.69
℄ Bent 4	382+74.05	9.00	689.57	689.57
A2	382+84.05	9.00	689.47	689.47
℄ Bent 5	382+97.05	9.00	689.35	689.35
B2	383+07.05	9.00	689.25	689.25
℄ Bent 6	383+20.05	9.00	689.12	689.12
C2	383+30.05	9.00	689.02	689.02
℄ Bent 7	383+43.05	9.00	688.89	688.89
A3	383+53.05	9.00	688.79	688.79
℄ Bent 8	383+66.05	9.00	688.66	688.66
B3	383+76.05	9.00	688.56	688.56
℄ Bent 9	383+89.05	9.00	688.43	688.43
C3	383+99.05	9.00	688.34	688.34
℄ Bent 10	384+12.05	9.00	688.22	688.22
D3	384+22.05	9.00	688.14	688.14
℄ Bent 11	384+35.05	8.80	688.04	688.04
E3	384+45.05	8.20	687.97	687.97
℄ Bent 12	384+58.05	7.42	687.89	687.89
A4	384+68.05	6.82	687.84	687.84
℄ Bent 13	384+81.05	6.04	687.78	687.78
B4	384+91.05	5.44	687.75	687.75
℄ Bent 14	385+04.05	4.66	687.72	687.72
C4	385+14.05	4.06	687.70	687.70
℄ Bent 15	385+27.05	3.28	687.70	687.70
D4	385+37.05	2.68	687.70	687.70
℄ Bent 16	385+50.05	1.90	687.72	687.72
E4	385+60.05	1.30	687.74	687.74
℄ Bent 17	385+73.05	0.52	687.78	687.78
A5	385+83.05	-0.08	687.81	687.81
℄ Bent 18	385+96.05	-0.86	687.85	687.85
B5	386+06.05	-1.46	687.88	687.88
℄ Bent 19	386+19.05	-2.00	687.94	687.94
C5	386+29.05	-2.00	687.98	687.98
℄ Bent 20	386+42.05	-2.00	688.03	688.03
D5	386+52.05	-2.00	688.07	688.07
℄ Bent 21	386+65.05	-2.00	688.12	688.12
E5	386+75.05	-2.00	688.16	688.16
℄ Bent 22	386+88.05	-2.00	688.21	688.21
A6	386+98.05	-2.00	688.25	688.25
℄ Bent 23	387+11.05	-2.00	688.30	688.30
B6	387+21.05	-2.00	688.34	688.34
℄ Bent 24	387+34.05	-2.00	688.40	688.40
C6	387+44.05	-2.00	688.44	688.44
℄ Bent 25	387+57.05	-2.00	688.49	688.49
D6	387+67.05	-2.00	688.53	688.53
℄ Bent 26	387+80.05	-2.00	688.58	688.58
E6	387+90.05	-2.00	688.62	688.62
℄ Bent 27	388+03.05	-2.00	688.67	688.67
A7	388+13.05	-2.00	688.71	688.71
℄ Bent 28	388+26.05	-2.00	688.76	688.76
B7	388+36.05	-2.00	688.80	688.80
℄ Bent 29	388+49.05	-2.00	688.86	688.86
C7	388+59.05	-2.00	688.90	688.90
℄ Bent 30	388+72.05	-2.00	688.95	688.95
D7	388+82.05	-2.00	688.99	688.99
℄ Bent 31	388+95.05	-2.00	689.04	689.04
E7	389+05.05	-2.00	689.08	689.08
℄ Bent 32	389+18.05	-2.00	689.13	689.13
A8	389+28.05	-2.00	689.17	689.17
℄ Bent 33	389+41.05	-2.00	689.22	689.22
B8	389+51.05	-2.00	689.26	689.26
℄ Bent 34	389+64.05	-2.00	689.32	689.32
C8	389+74.05	-2.00	689.36	689.36
℄ Bent 35	389+87.05	-2.00	689.41	689.41
A9	389+97.05	-2.00	689.45	689.45
℄ Bent 36	390+10.05	-2.00	689.50	689.50
B9	390+20.05	-2.00	689.54	689.54
℄ Bent 37	390+33.05	-2.00	689.59	689.59
C9	390+43.05	-2.00	689.63	689.63
E. End of Curb	390+53.49	-0.50	689.83	689.83

SOUTH EDGE OF DECK FOR WB

Location	Station	Offset	Theoretical Grade Elevations	Theoretical Grade Elevations Adjusted For Dead Load Deflection
Work Point #1	382+32.09	10.50	690.48	690.48
B1	382+38.05	9.58	690.38	690.38
℄ Bent 3	382+51.05	9.58	690.28	690.28
C1	382+61.05	9.58	690.19	690.19
℄ Bent 4	382+74.05	9.58	690.07	690.07
A2	382+84.05	9.58	689.97	689.97
℄ Bent 5	382+97.05	9.58	689.85	689.85
B2	383+07.05	9.58	689.75	689.75
℄ Bent 6	383+20.05	9.58	689.62	689.62
C2	383+30.05	9.58	689.52	689.52
℄ Bent 7	383+43.05	9.58	689.39	689.39
A3	383+53.05	9.58	689.29	689.29
℄ Bent 8	383+66.05	9.58	689.16	689.16
B3	383+76.05	9.58	689.06	689.06
℄ Bent 9	383+89.05	9.58	688.93	688.93
C3	383+99.05	9.58	688.84	688.84
℄ Bent 10	384+12.05	9.58	688.72	688.72
D3	384+22.05	9.58	688.64	688.64
℄ Bent 11	384+35.05	9.38	688.54	688.54
E3	384+45.05	8.78	688.47	688.47
℄ Bent 12	384+58.05	8.00	688.39	688.39
A4	384+68.05	7.40	688.34	688.34
℄ Bent 13	384+81.05	6.62	688.28	688.28
B4	384+91.05	6.02	688.25	688.25
℄ Bent 14	385+04.05	5.24	688.22	688.22
C4	385+14.05	4.64	688.20	688.20
℄ Bent 15	385+27.05	3.86	688.20	688.20
D4	385+37.05	3.26	688.20	688.20
℄ Bent 16	385+50.05	2.48	688.22	688.22
E4	385+60.05	1.88	688.24	688.24
℄ Bent 17	385+73.05	1.10	688.28	688.28
A5	385+83.05	0.50	688.31	688.31
℄ Bent 18	385+96.05	-0.28	688.35	688.35
B5	386+06.05	-0.88	688.38	688.38
℄ Bent 19	386+19.05	-1.42	688.44	688.44
C5	386+29.05	-1.42	688.48	688.48
℄ Bent 20	386+42.05	-1.42	688.53	688.53
D5	386+52.05	-1.42	688.57	688.57
℄ Bent 21	386+65.05	-1.42	688.62	688.62
E5	386+75.05	-1.42	688.66	688.66
℄ Bent 22	386+88.05	-1.42	688.71	688.71
A6	386+98.05	-1.42	688.75	688.75
℄ Bent 23	387+11.05	-1.42	688.80	688.80
B6	387+21.05	-1.42	688.84	688.84
℄ Bent 24	387+34.05	-1.42	688.90	688.90
C6	387+44.05	-1.42	688.94	688.94
℄ Bent 25	387+57.05	-1.42	688.99	688.99
D6	387+67.05	-1.42	689.03	689.03
℄ Bent 26	387+80.05	-1.42	689.08	689.08
E6	387+90.05	-1.42	689.12	689.12
℄ Bent 27	388+03.05	-1.42	689.17	689.17
A7	388+13.05	-1.42	689.21	689.21
℄ Bent 28	388+26.05	-1.42	689.26	689.26
B7	388+36.05	-1.42	689.30	689.30
℄ Bent 29	388+49.05	-1.42	689.36	689.36
C7	388+59.05	-1.42	689.40	689.40
℄ Bent 30	388+72.05	-1.42	689.45	689.45
D7	388+82.05	-1.42	689.49	689.49
℄ Bent 31	388+95.05	-1.42	689.54	689.54
E7	389+05.05	-1.42	689.58	689.58
℄ Bent 32	389+18.05	-1.42	689.63	689.63
A8	389+28.05	-1.42	689.67	689.67
℄ Bent 33	389+41.05	-1.42	689.72	689.72
B8	389+51.05	-1.42	689.76	689.76
℄ Bent 34	389+64.05	-1.42	689.82	689.82
C8	389+74.05	-1.42	689.86	689.86
℄ Bent 35	389+87.05	-1.42	689.91	689.91
A9	389+97.05	-1.42	689.95	689.95
℄ Bent 36	390+10.05	-1.42	690.00	690.00
B9	390+20.05	-1.42	690.04	690.04
℄ Bent 37	390+33.05	-1.42	690.09	690.09
C9	390+43.05	-1.42	690.13	690.13
Work Point #2	390+52.91	-0.50	690.33	690.33

STAGE CONSTRUCTION LINE

Location	Station	Offset	Theoretical Grade Elevations	Theoretical Grade Elevations Adjusted For Dead Load Deflection
W. End of Deck	382+04.55	11.42	689.95	689.95
℄ Bent 1	382+05.05	11.42	689.95	689.95
A1	382+15.05	11.42	689.89	689.89
℄ Bent 2	382+28.05	11.42	689.80	689.80
B1	382+38.05	11.42	690.23	690.23
℄ Bent 3	382+51.05	11.42	690.12	690.12
C1	382+61.05	11.42	690.03	690.03
℄ Bent 4	382+74.05	11.42	689.91	689.91
A2	382+84.05	11.42	689.82	689.82
℄ Bent 5	382+97.05	11.42	689.69	689.69
B2	383+07.05	11.42	689.59	689.59
℄ Bent 6	383+20.05	11.42	689.46	689.46
C2	383+30.05	11.42	689.36	689.36
℄ Bent 7	383+43.05	11.42	689.24	689.24
A3	383+53.05	11.42	689.14	689.14
℄ Bent 8	383+66.05	11.42	689.01	689.01
B3	383+76.05	11.42	688.91	688.91
℄ Bent 9	383+89.05	11.42	688.78	688.78
C3	383+99.05	11.42	688.68	688.68
℄ Bent 10	384+12.05	11.42	688.56	688.56
D3	384+22.05	11.42	688.48	688.48
℄ Bent 11	384+35.05	11.42	688.39	688.39
E3	384+45.05	11.42	688.33	688.33
℄ Bent 12	384+58.05	11.42	688.26	688.26
A4	384+68.05	11.42	688.22	688.22
℄ Bent 13	384+81.05	11.42	688.17	688.17
B4	384+91.05	11.42	688.15	688.15
℄ Bent 14	385+04.05	11.42	688.13	688.13
C4	385+14.05	11.42	688.12	688.12
℄ Bent 15	385+27.05	11.42	688.13	688.13
D4	385+37.05	11.42	688.14	688.14
℄ Bent 16	385+50.05	11.42	688.17	688.17
E4	385+60.05	11.42	688.20	688.20
℄ Bent 17	385+73.05	11.42	688.25	688.25
A5	385+83.05	11.42	688.29	688.29
℄ Bent 18	385+96.05	11.42	688.34	688.34
B5	386+06.05	11.42	688.38	688.38
℄ Bent 19	386+19.05	11.42	688.44	688.44
C5	386+29.05	11.42	688.48	688.48
℄ Bent 20	386+42.05	11.42	688.53	688.53
D5	386+52.05	11.42	688.57	688.57
℄ Bent 21	386+65.05	11.42	688.62	688.62
E5	386+75.05	11.42	688.66	688.66
℄ Bent 22	386+88.05	11.42	688.71	688.71
A6	386+98.05	11.42	688.25	688.25
℄ Bent 23	387+11.05	11.42	688.30	688.30
B6	387+21.05	11.42	688.34	688.34
℄ Bent 24	387+34.05	11.42	688.39	688.39
C6	387+44.05	11.42	688.43	688.43
℄ Bent 25	387+57.05	11.42	688.49	688.49
D6	387+67.05	11.42	688.53	688.53
℄ Bent 26	387+80.05	11.42	688.58	688.58
E6	387+90.05	11.42	688.62	688.62
℄ Bent 27	388+03.05	11.42	688.67	688.67
A7	388+13.05	11.42	688.71	688.71
℄ Bent 28	388+26.05	11.42	688.76	688.76
B7	388+36.05	11.42	688.80	688.80
℄ Bent 29	388+49.05	11.42	688.85	688.85
C7	388+59.05	11.42	688.89	688.89
℄ Bent 30	388+72.05	11.42	688.95	688.95
D7	388+82.05	11.42	688.99	688.99
℄ Bent 31	388+95.05	11.42	689.04	689.04
E7	389+05.05	11.42	689.08	689.08
℄ Bent 32	389+18.05	11.42	689.13	689.13
A8	389+28.05	11.42	689.17	689.17
℄ Bent 33	389+41.05	11.42	689.22	689.22
B8	389+51.05	11.42	689.26	689.26
℄ Bent 34	389+64.05	11.42	689.31	689.31
C8	389+74.05	11.42	689.35	689.35
℄ Bent 35	389+87.05	11.42	689.41	689.41
A9	389+97.05	11.42	689.45	689.45
℄ Bent 36	390+10.05	11.42	689.50	689.50
B9	390+20.05	11.42	689.54	689.54
℄ Bent 37	390+33.05	11.42	689.59	689.59
C9	390+43.05	11.42	689.63	689.63
℄ Bent 38	390+56.05	11.42	689.68	689.68
E. End of Deck	390+56.55	11.42	689.68	689.68

NORTH EDGE OF DECK FOR EB

Location	Station	Offset	Theoretical Grade Elevations	Theoretical Grade Elevations Adjusted For Dead Load Deflection
Work Point #1	382+32.09	10.50	690.48	690.48
B1	382+38.05	11.42	690.23	690.23
℄ Bent 3	382+51.05	11.42	690.12	690.12
C1	382+61.05	11.42	690.03	690.03
℄ Bent 4	382+74.05	11.42	689.91	689.91
A2	382+84.05	11.42	689.82	689.82
℄ Bent 5	382+97.05	11.42	689.69	689.69
B2	383+07.05	11.42	689.59	689.59
℄ Bent 6	383+20.05	11.42	689.46	689.46
C2	383+30.05	11.42	689.36	689.36
℄ Bent 7	383+43.05	11.42	689.24	689.24
A3	383+53.05	11.42	689.14	689.14
℄ Bent 8	383+66.05	11.42	689.01	689.01
B3	383+76.05	11.42	688.91	688.91
℄ Bent 9	383+89.05	11.42	688.78	688.78
C3	383+99.05	11.42	688.68	688.68
℄ Bent 10	384+12.05	11.42	688.56	688.56
D3	384+22.05	11.42	688.48	688.48
℄ Bent 11	384+35.05	11.42	688.39	688.39
E3	384+45.05	11.42	688.33	688.33
℄ Bent 12	384+58.05	11.42	688.26	688.26
A4	384+68.05	11.42	688.22	688.22
℄ Bent 13	384+81.05	11.42	688.17	688.17
B4	384+91.05	11.42	688.15	688.15
℄ Bent 14	385+04.05	11.42	688.13	688.13
C4	385+14.05	11.42	688.12	688.12
℄ Bent 15	385+27.05	11.42	688.13	688.13
D4	385+37.05	11.42	688.14	688.14
℄ Bent 16	385+50.05	11.42	688.17	688.17
E4	385+60.05	11.42	688.20	688.20
℄ Bent 17	385+73.05	11.42	688.25	688.25
A5	385+83.05	11.42	688.29	688.29
℄ Bent 18	385+96.05	11.42	688.34	688.34
B5	386+06.05	11.42	688.38	688.38
℄ Bent 19	386+19.05	11.42	688.44	688.44
C5	386+29.05	11.42	688.48	688.48
℄ Bent 20	386+42.05	11.42	688.53	688.53
D5	386+52.05	11.42	688.57	688.57
℄ Bent 21	386+65.05	11.42	688.62	688.62
E5	386+75.05	11.42	688.66	688.66
℄ Bent 22	386+88.05	11.21	688.71	688.71
A6	386+98.05	10.56	688.75	688.75
℄ Bent 23	387+11.05	9.72	688.82	688.82
B6	387+21.05	9.07	688.87	688.87
℄ Bent 24	387+34.05	8.23	688.93	688.93
C6	387+44.05	7.58	688.98	688.98
℄ Bent 25	387+57.05	6.74	689.05	689.05
D6	387+67.05	6.09	689.10	689.10
℄ Bent 26	387+80.05	5.25	689.16	689.16
E6	387+90.05	4.60	689.21	689.21
℄ Bent 27	388+03.05	3.75	689.28	689.28
A7	388+13.05	3.11	689.33	689.33
℄ Bent 28	388+26.05	2.26	689.39	689.39
B7	388+36.05	1.61	689.44	689.44
℄ Bent 29	388+49.05	0.77	689.51	689.51
C7	388+59.05	0.42	689.55	689.55
℄ Bent 30	388+72.05	0.42	689.60	689.60
D7	388+82.05	0.42	689.64	689.64
℄ Bent 31	388+95.05	0.42	689.70	689.70
E7	389+05.05	0.42	689.74	689.74
℄ Bent 32	389+18.05	0.42	689.79	689.79
A8	389+28.05	0.42	689.83	689.83
℄ Bent 33	389+41.05	0.42	689.88	689.88
B8	389+51.05	0.42	689.92	689.92
℄ Bent 34	389+64.05	0.42	689.97	689.97
C8	389+74.05	0.42	690.01	690.01
℄ Bent 35	389+87.05	0.42	690.06	690.06
A9	389+97.05	0.42	690.10	690.10
℄ Bent 36	390+10.05	0.42	690.16	690.16
B9	390+20.05	0.42	690.20	690.20
℄ Bent 37	390+33.05	0.42	690.25	690.25
C9	390+43.05	0.42	690.29	690.29
Work Point #2	390+52.91	-0.50	690.33	690.33

NORTH CURB LINE FOR EB

Location	Station	Offset	Theoretical Grade Elevations	Theoretical Grade Elevations Adjusted For Dead Load Deflection
W. End of Curb	382+31.51	10.50	689.98	689.98
B1	382+38.05	12.00	689.73	689.73
℄ Bent 3	382+51.05	12.00	689.62	689.62
C1	382+61.05	12.00	689.53	689.53
℄ Bent 4	382+74.05	12.00	689.41	689.41
A2	382+84.05	12.00	689.32	689.32
℄ Bent 5	382+97.05	12.00	689.19	689.19
B2	383+07.05	12.00	689.09	689.09
℄ Bent 6	383+20.05	12.00	688.96	688.96
C2	383+30.05	12.00	688.86	688.86
℄ Bent 7	383+43.05	12.00	688.74	688.74
A3	383+53.05	12.00	688.64	688.64
℄ Bent 8	383+66.05	12.00	688.51	688.51
B3	383+76.05	12.00	688.41	688.41
℄ Bent 9	383+89.05	12.00	688.28	688.28
C3	383+99.05	12.00	688.18	688.18
℄ Bent 10	384+12.05	12.00	688.06	688.06
D3	384+22.05	12.00	687.98	687.98
℄ Bent 11	384+35.05	12.00	687.89	687.89
E3	384+45.05	12.00	687.83	687.83
℄ Bent 12	384+58.05	12.00	687.76	687.76
A4	384+68.05	12.00	687.72	687.72
℄ Bent 13	384+81.05	12.00	687.67	687.67
B4	384+91.05	12.00	687.65	687.65
℄ Bent 14	385+04.05	12.00	687.63	687.63
C4	385+14.05	12.00	687.62	687.62
℄ Bent 15	385+27.05	12.00	687.63	687.63
D4	385+37.05	12.00	687.64	687.64
℄ Bent 16	385+50.05	12.00	687.67	687.67
E4	385+60.05	12.00	687.70	687.70
℄ Bent 17	385+73.05	12.00	687.75	687.75
A5	385+83.05	12.00	687.79	687.79
℄ Bent 18	385+96.05	12.00	687.84	687.84
B5	386+06.05	12.00	687.88	687.88
℄ Bent 19	386+19.05	12.00	687.94	687.94
C5	386+29.05	12.00	687.98	687.98
℄ Bent 20	386+42.05	12.00	688.03	688.03
D5	386+52.05	12.00	688.07	688.07
℄ Bent 21	386+65.05	12.00	688.12	688.12
E5	386+75.05	12.00	688.16	688.16
℄ Bent 22	386+88.05	11.80	688.21	688.21
A6	386+98.05	11.15	688.25	688.25
℄ Bent 23	387+11.05	10.31	688.32	688.32
B6	387+21.05	9.66	688.37	688.37
℄ Bent 24	387+34.05	8.81	688.43	688.43
C6	387+44.05	8.16	688.48	688.48
℄ Bent 25	387+57.05	7.32	688.55	688.55
D6	387+67.05	6.67	688.60	688.60
℄ Bent 26	387+80.05	5.83	688.66	688.66
E6	387+90.05	5.18	688.71	688.71
℄ Bent 27	388+03.05	4.34	688.78	688.78
A7	388+13.05	3.69	688.83	688.83
℄ Bent 28	388+26.05	2.85	688.89	688.89
B7	388+36.05	2.20	688.94	688.94
℄ Bent 29	388+49.05	1.35	689.01	689.01
C7	388+59.05	1.00	689.05	689.05
℄ Bent 30	388+72.05	1.00	689.10	689.10
D7	388+82.05	1.00	689.14	689.14
℄ Bent 31	388+95.05	1.00	689.20	689.20
E7	389+05.05	1.00	689.24	689.24
℄ Bent 32	389+18.05	1.00	689.29	689.29
A8	389+28.05	1.00	689.33	689.33
℄ Bent 33	389+41.05	1.00	689.38	689.38
B8	389+51.05	1.00	689.42	689.42
℄ Bent 34	389+64.05	1.00	689.47	689.47
C8	389+74.05	1.00	689.51	689.51
℄ Bent 35	389+87.05	1.00	689.56	689.56
A9	389+97.05	1.00	689.60	689.60
℄ Bent 36	390+10.05	1.00	689.66	689.66
B9	390+20.05	1.00	689.70	689.70
℄ Bent 37	390+33.05	1.00	689.75	689.75
C9	390+43.05	1.00	689.79	689.79
E. End of Curb	390+53.49	-0.50	689.83	689.83

EB PG

Location	Station	Offset	Theoretical Grade Elevations	Theoretical Grade Elevations Adjusted For Dead Load Deflection
W. End of Deck	382+04.55	14.00	689.91	689.91
℄ Bent 1	382+05.05	14.00	689.91	689.91
A1	382+15.05	14.00	689.85	689.85
℄ Bent 2	382+28.05	14.00	689.76	689.76
B1	382+38.05	14.00	689.69	689.69
℄ Bent 3	382+51.05	14.00	689.58	689.58
C1	382+61.05	14.00	689.49	689.49
℄ Bent 4	382+74.05	14.00	689.37	689.37
A2	382+84.05	14.00	689.28	689.28
℄ Bent 5	382+97.05	14.00	689.15	689.15
B2	383+07.05	14.00	689.05	689.05
℄ Bent 6	383+20.05	14.00	688.92	688.92
C2	383+30.05	14.00	688.82	688.82
℄ Bent 7	383+43.05	14.00	688.70	688.70
A3	383+53.05	14.00	688.60	688.60
℄ Bent 8	383+66.05	14.00	688.47	688.47
B3	383+76.05	14.00	688.37	688.37
℄ Bent 9	383+89.05	14.00	688.24	688.24
C3	383+99.05	14.00	688.14	688.14
℄ Bent 10	384+12.05	14.00	688.02	688.02
D3	384+22.05	14.00	687.94	687.94
℄ Bent 11	384+35.05	14.00	687.85	687.85
E3	384+45.05	14.00	687.79	687.79
℄ Bent 12	384+58.05	14.00	687.72	687.72
A4	384+68.05	14.00	687.68	687.68
℄ Bent 13	384+81.05	14.00	687.63	687.63
B4	384+91.05	14.00	687.61	687.61
℄ Bent 14	385+04.05	14.00	687.59	687.59
C4	385+14.05	14.00	687.58	687.58
℄ Bent 15	385+27.05	14.00	687.59	687.59
D4	385+37.05	14.00	687.60	687.60
℄ Bent 16	385+50.05	14.00	687.63	687.63
E4	385+60.05	14.00	687.66	687.66
℄ Bent 17	385+73.05	14.00	687.71	687.71
A5	385+83.05	14.00	687.75	687.75
℄ Bent 18	385+96.05	14.00	687.80	687.80
B5	386+06.05	14.00	687.84	687.84
℄ Bent 19	386+19.05	14.00	687.90	687.90
C5	386+29.05	14.00	687.94	687.94
℄ Bent 20	386+42.05	14.00	687.99	687.99
D5	386+52.05	14.00	688.03	688.03
℄ Bent 21	386+65.05	14.00	688.08	688.08
E5	386+75.05	14.00	688.12	688.12
℄ Bent 22	386+88.05	14.00	688.17	688.17
A6	386+98.05	14.00	688.21	688.21
℄ Bent 23	387+11.05	14.00	688.26	688.26
B6	387+21.05	14.00	688.30	688.30
℄ Bent 24	387+34.05	14.00	688.36	688.36
C6	387+44.05	14.00	688.40	688.40
℄ Bent 25	387+57.05	14.00	688.45	688.45
D6	387+67.05	14.00	688.49	688.49
℄ Bent 26	387+80.05	14.00	688.54	688.54
E6	387+90.05	14.00	688.58	688.58
℄ Bent 27	388+03.05	14.00	688.63	688.63
A7	388+13.05	14.00	688.67	688.67
℄ Bent 28	388+26.05	14.00	688.72	688.72
B7	388+36.05	14.00	688.76	688.76
℄ Bent 29	388+49.05	14.00	688.82	688.82
C7	388+59.05	14.00	688.86	688.86
℄ Bent 30	388+72.05	14.00	688.91	688.91
D7	388+82.05	14.00	688.95	688.95
℄ Bent 31	388+95.05	14.00	689.00	689.00
E7	389+05.05	14.00	689.04	689.04
℄ Bent 32	389+18.05	14.00	689.09	689.09
A8	389+28.05	14.00	689.13	689.13
℄ Bent 33	389+41.05	14.00	689.18	689.18
B8	389+51.05	14.00	689.22	689.22
℄ Bent 34	389+64.05	14.00	689.28	689.28
C8	389+74.05	14.00	689.32	689.32
℄ Bent 35	389+87.05	14.00	689.37	689.37
A9	389+97.05	14.00	689.41	689.41
℄ Bent 36	390+10.05	14.00	689.46	689.46
B9	390+20.05	14.00	689.50	689.50
℄ Bent 37	390+33.05	14.00	689.55	689.55
C9	390+43.05	14.00	689.59	689.59
℄ Bent 38	390+56.05	14.00	689.64	689.64
E. End of Deck	390+56.55	14.00	689.65	689.65

SOUTH SLOPE BREAK LINE

Location	Station	Offset	Theoretical Grade Elevations	Theoretical Grade Elevations Adjusted For Dead Load Deflection
W. End of Deck	382+04.55	55.65	688.83	688.83
℄ Bent 1	382+05.05	55.33	688.84	688.84
A1	382+15.05	50.62	688.93	688.93
℄ Bent 2	382+28.05	46.27	688.98	688.98
B1	382+38.05	43.58	689.02	689.02
℄ Bent 3	382+51.05	40.90	689.04	689.04
C1	382+61.05	39.43	688.97	688.97
℄ Bent 4	382+74.05	38.30	688.87	688.87
A2	382+84.05	38.00	688.80	688.80
℄ Bent 5	382+97.05	38.00	688.67	688.67
B2	383+07.05	38.00	688.57	688.57
℄ Bent 6	383+20.05	38.00	688.44	688.44
C2	383+30.05	38.00	688.34	688.34
℄ Bent 7	383+43.05	38.00	688.22	688.22
A3	383+53.05	38.00	688.12	688.12
℄ Bent 8	383+66.05	38.00	687.99	687.99
B3	383+76.05	38.00	687.89	687.89
℄ Bent 9	383+89.05	38.00	687.76	687.76
C3	383+99.05	38.00	687.66	687.66
℄ Bent 10	384+12.05	38.00	687.54	687.54
D3	384+22.05	38.00	687.46	687.46
℄ Bent 11	384+35.05	38.00	687.37	687.37
E3	384+45.05	38.00	687.31	687.31
℄ Bent 12	384+58.05	38.00	687.24	687.24
A4	384+68.05	38.00	687.20	687.20
℄ Bent 13	384+81.05	38.00	687.15	687.15
B4	384+91.05	38.00	687.13	687.13
℄ Bent 14	385+04.05	38.00	687.11	687.11
C4	385+14.05	38.00	687.10	687.10
℄ Bent 15	385+27.05	38.00	687.11	687.11
D4	385+37.05	38.00	687.12	687.12
℄ Bent 16	385+50.05	38.00	687.15	687.15
E4	385+60.05	38.00	687.18	687.18
℄ Bent 17	385+73.05	38.00	687.23	687.23
A5	385+83.05	38.00	687.27	687.27
℄ Bent 18	385+96.05	38.00	687.32	687.32
B5	386+06.05	38.00	687.36	687.36
℄ Bent 19	386+19.05	38.00	687.42	687.42
C5	386+29.05	38.00	687.46	687.46
℄ Bent 20	386+42.05	38.00	687.51	687.51
D5	386+52.05	38.00	687.55	687.55
℄ Bent 21	386+65.05	38.00	687.60	687.60
E5	386+75.05	38.00	687.64	687.64
℄ Bent 22	386+88.05	38.00	687.69	687.69
A6	386+98.05	38.00	687.73	687.73
℄ Bent 23	387+11.05	38.00	687.78	687.78
B6	387+21.05	38.00	687.82	687.82
℄ Bent 24	387+34.05	38.00	687.88	687.88
C6	387+44.05	38.00	687.92	687.92
℄ Bent 25	387+57.05	38.00	687.97	687.97
D6	387+67.05	38.00	688.01	688.01
℄ Bent 26	387+80.05	38.00	688.06	688.06
E6	387+90.05	38.00	688.10	688.10
℄ Bent 27	388+03.05	38.00	688.15	688.15
A7	388+13.05	38.00	688.19	688.19
℄ Bent 28	388+26.05	38.00	688.24	688.24
B7	388+36.05	38.00	688.28	688.28
℄ Bent 29	388+49.05	38.00	688.34	688.34
C7	388+59.05	38.00	688.38	688.38
℄ Bent 30	388+72.05	38.00	688.43	688.43
D7	388+82.05	38.00	688.47	688.47
℄ Bent 31	388+95.05	38.00	688.52	688.52
E7	389+05.05	38.00	688.56	688.56
℄ Bent 32	389+18.05	38.00	688.61	688.61
A8	389+28.05	38.00	688.65	688.65
℄ Bent 33	389+41.05	38.00	688.70	688.70
B8	389+51.05	38.00	688.74	688.74
℄ Bent 34	389+64.05	38.00	688.80	688.80
C8	389+74.05	38.00	688.84	688.84
℄ Bent 35	389+87.05	38.00	688.89	688.89
A9	389+97.05	38.00	688.93	688.93
℄ Bent 36	390+10.05	38.00	688.98	688.98
B9	390+20.05	38.00	689.02	689.02
℄ Bent 37	390+33.05	38.00	689.07	689.07
C9	390+43.05	38.00	689.11	689.11
℄ Bent 38	390+56.05	38.00	689.16	689.16
E. End of Deck	390+56.55	38.00	689.17	689.17

SOUTH CURB LINE FOR EB

Location	Station	Offset	Theoretical Grade Elevations	Theoretical Grade Elevations Adjusted For Dead Load Deflection
W. End of Deck	382+04.55	58.03	688.70	688.70
℄ Bent 1	382+05.05	57.70	688.70	688.70
A1	382+15.05	52.76	688.80	688.80
℄ Bent 2	382+28.05	48.35	688.86	688.86
B1	382+38.05	45.64	688.90	688.90
℄ Bent 3	382+51.05	42.92	688.92	688.92
C1	382+61.05	41.45	688.85	688.85
℄ Bent 4	382+74.05	40.30	688.75	688.75
A2	382+84.05	40.00	688.68	688.68
℄ Bent 5	382+97.05	40.00	688.55	688.55
B2	383+07.05	40.00	688.45	688.45
℄ Bent 6	383+20.05	40.00	688.32	688.32
C2	383+30.05	40.00	688.22	688.22
℄ Bent 7	383+43.05	40.00	688.10	688.10
A3	383+53.05	40.00	688.00	688.00
℄ Bent 8	383+66.05	40.00	687.87	687.87
B3	383+76.05	40.00	687.77	687.77
℄ Bent 9	383+89.05	40.00	687.64	687.64
C3	383+99.05	40.00	687.54	687.54
℄ Bent 10	384+12.05	40.00	687.42	687.42
D3	384+22.05	40.00	687.34	687.34
℄ Bent 11	384+35.05	40.00	687.25	687.25
E3	384+45.05	40.00	687.19	687.19
℄ Bent 12	384+58.05	40.00	687.12	687.12
A4	384+68.05	40.00	687.08	687.08
℄ Bent 13	384+81.05	40.00	687.03	687.03
B4	384+91.05	40.00	687.01	687.01
℄ Bent 14	385+04.05	40.00	686.99	686.99
C4	385+14.05	40.00	686.98	686.98
℄ Bent 15	385+27.05	40.00	686.99	686.99
D4	385+37.05	40.00	687.00	687.00
℄ Bent 16	385+50.05	40.00	687.03	687.03
E4	385+60.05	40.00	687.06	687.06
℄ Bent 17	385+73.05	40.00	687.11	687.11
A5	385+83.05	40.00	687.15	687.15
℄ Bent 18	385+96.05	40.00	687.20	687.20
B5	386+06.05	40.00	687.24	687.24
℄ Bent 19	386+19.05	40.00	687.30	687.30
C5	386+29.05	40.00	687.34	687.34
℄ Bent 20	386+42.05	40.00	687.39	687.39
D5	386+52.05	40.00	687.43	687.43
℄ Bent 21	386+65.05	40.00	687.48	687.48
E5	386+75.05	40.00	687.52	687.52
℄ Bent 22	386+88.05	40.00	687.57	687.57
A6	386+98.05	40.00	687.61	687.61
℄ Bent 23	387+11.05	40.00	687.66	687.66
B6	387+21.05	40.00	687.70	687.70
℄ Bent 24	387+34.05	40.00	687.76	687.76
C6	387+44.05	40.00	687.80	687.80
℄ Bent 25	387+57.05	40.00	687.85	687.85
D6	387+67.05	40.00	687.89	687.89
℄ Bent 26	387+80.05	40.00	687.94	687.94
E6	387+90.05	40.00	687.98	687.98
℄ Bent 27	388+03.05	40.00	688.03	688.03
A7	388+13.05	40.00	688.07	688.07
℄ Bent 28	388+26.05	40.00	688.12	688.12
B7	388+36.05	40.00	688.16	688.16
℄ Bent 29	388+49.05	40.00	688.22	688.22
C7	388+59.05	40.00	688.26	688.26
℄ Bent 30	388+72.05	40.00	688.31	688.31
D7	388+82.05	40.00	688.35	688.35
℄ Bent 31	388+95.05	40.00	688.40	688.40
E7	389+05.05	40.00	688.44	688.44
℄ Bent 32	389+18.05	40.00	688.49	688.49
A8	389+28.05	40.00	688.53	688.53
℄ Bent 33	389+41.05	40.00	688.58	688.58
B8	389+51.05	40.00	688.62	688.62
℄ Bent 34	389+64.05	40.00	688.68	688.68
C8	389+74.05	40.00	688.72	688.72
℄ Bent 35	389+87.05	40.00	688.77	688.77
A9	389+97.05	40.00	688.81	688.81
℄ Bent 36	390+10.05	40.00	688.86	688.86
B9	390+20.05	40.00	688.90	688.90
℄ Bent 37	390+33.05	40.00	688.95	688.95
C9	390+43.05	40.00	688.99	688.99
℄ Bent 38	390+56.05	40.00	689.04	689.04
E. End of Deck	390+56.55	40.00	689.05	689.05

SOUTH EDGE OF DECK FOR EB

Location	Station	Offset	Theoretical Grade Elevations	Theoretical Grade Elevations Adjusted For Dead Load Deflection
W. End of Deck	382+04.55	58.73	688.73	688.73
℄ Bent 1	382+05.05	58.40	688.74	688.74
A1	382+15.05	53.38	688.84	688.84
℄ Bent 2	382+28.05	48.96	688.90	688.90
B1	382+38.05	46.24	688.94	688.94
℄ Bent 3	382+51.05	43.52	689.42	689.42
C1	382+61.05	42.04	689.35	689.35
℄ Bent 4	382+74.05	40.88	689.25	689.25
A2	382+84.05	40.58	689.18	689.18
℄ Bent 5	382+97.05	40.58	689.05	689.05
B2	383+07.05	40.58	688.95	688.95
℄ Bent 6	383+20.05	40.58	688.82	688.82
C2	383+30.05	40.58	688.72	688.72
℄ Bent 7	383+43.05	40.58	688.60	688.60
A3	383+53.05	40.58	688.50	688.50
℄ Bent 8	383+66.05	40.58	688.37	688.37
B3	383+76.05	40.58	688.27	688.27
℄ Bent 9	383+89.05	40.58	688.14	688.14
C3	383+99.05	40.58	688.04	688.04
℄ Bent 10	384+12.05	40.58	687.92	687.92
D3	384+22.05	40.58	687.84	687.84
℄ Bent 11	384+35.05	40.58	687.75	687.75
E3	384+45.05	40.58	687.69	687.69
℄ Bent 12	384+58.05	40.58	687.62	687.62
A4	384+68.05	40.58	687.58	687.58
℄ Bent 13	384+81.05	40.58	687.53	687.53
B4	384+91.05	40.58	687.51	687.51
℄ Bent 14	385+04.05	40.58	687.49	687.49
C4	385+14.05	40.58	687.48	687.48
℄ Bent 15	385+27.05	40.58	687.49	687.49
D4	385+37.05	40.58	687.50	687.50
℄ Bent 16	385+50.05	40.58	687.53	687.53
E4	385+60.05	40.58	687.56	687.56
℄ Bent 17	385+73.05	40.58	687.61	687.61
A5	385+83.05	40.58	687.65	687.65
℄ Bent 18	385+96.05	40.58	687.70	687.70
B5	386+06.05	40.58	687.74	687.74
℄ Bent 19	386+19.05	40.58	687.80	687.80
C5	386+29.05	40.58	687.84	687.84
℄ Bent 20	386+42.05	40.58	687.89	687.89
D5	386+52.05	40.58	687.93	687.93
℄ Bent 21	386+65.05	40.58	687.98	687.98
E5	386+75.05	40.58	688.02	688.02
℄ Bent 22	386+88.05	40.58	688.07	688.07
A6	386+98.05	40.58	688.11	688.11
℄ Bent 23	387+11.05	40.58	688.16	688.16
B6	387+21.05	40.58	688.20	688.20
℄ Bent 24	387+34.05	40.58	688.26	688.26
C6	387+44.05	40.58	688.30	688.30
℄ Bent 25	387+57.05	40.58	688.35	688.35
D6	387+67.05	40.58	688.39	688.39
℄ Bent 26	387+80.05	40.58	688.44	688.44
E6	387+90.05	40.58	688.48	688.48
℄ Bent 27	388+03.05	40.58	688.53	688.53
A7	388+13.05	40.58	688.57	688.57
℄ Bent 28	388+26.05	40.58	688.62	688.62
B7	388+36.05	40.58	688.66	688.66
℄ Bent 29	388+49.05	40.58	688.72	688.72
C7	388+59.05	40.58	688.76	688.76
℄ Bent 30	388+72.05	40.58	688.81	688.81
D7	388+82.05	40.58	688.85	688.85
℄ Bent 31	388+95.05	40.58	688.90	688.90
E7	389+05.05	40.58	688.94	688.94
℄ Bent 32	389+18.05	40.58	688.99	688.99
A8	389+28.05	40.58	689.03	689.03
℄ Bent 33	389+41.05	40.58	689.08	689.08
B8	389+51.05	40.58	689.12	689.12
℄ Bent 34	389+64.05	40.58	689.18	689.18
C8	389+74.05	40.58	689.22	689.22
℄ Bent 35	389+87.05	40.58	689.27	689.27
A9	389+97.05	40.58	689.31	689.31
℄ Bent 36	390+10.05	40.58	689.36	689.36
B9	390+20.05	40.58	689.40	689.40
℄ Bent 37	390+33.05	40.58	689.45	689.45
C9	390+43.05	40.58	689.49	689.49
℄ Bent 38	390+56.05	40.58	689.54	689.54
E. End of Deck	390+56.55	40.58	689.55	689.55

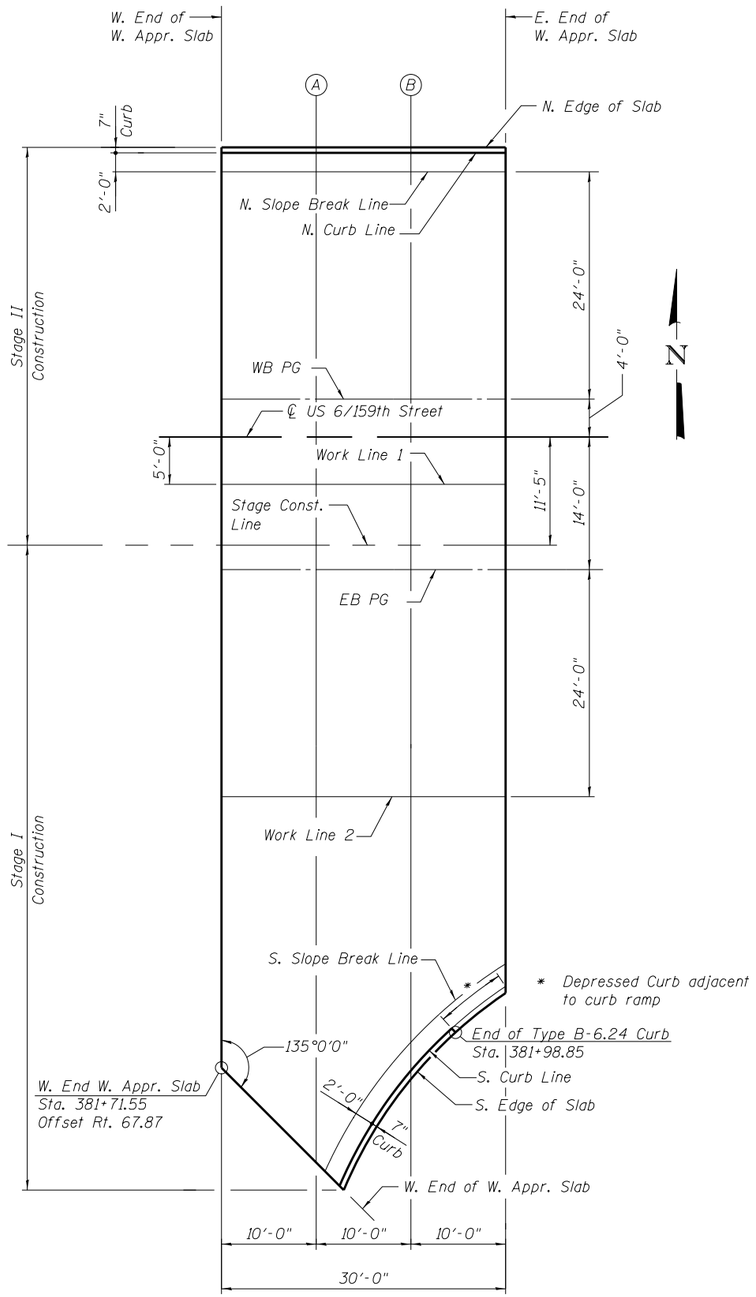

PLAN - DRY LAND BRIDGE 2 WEST APPROACH SLAB

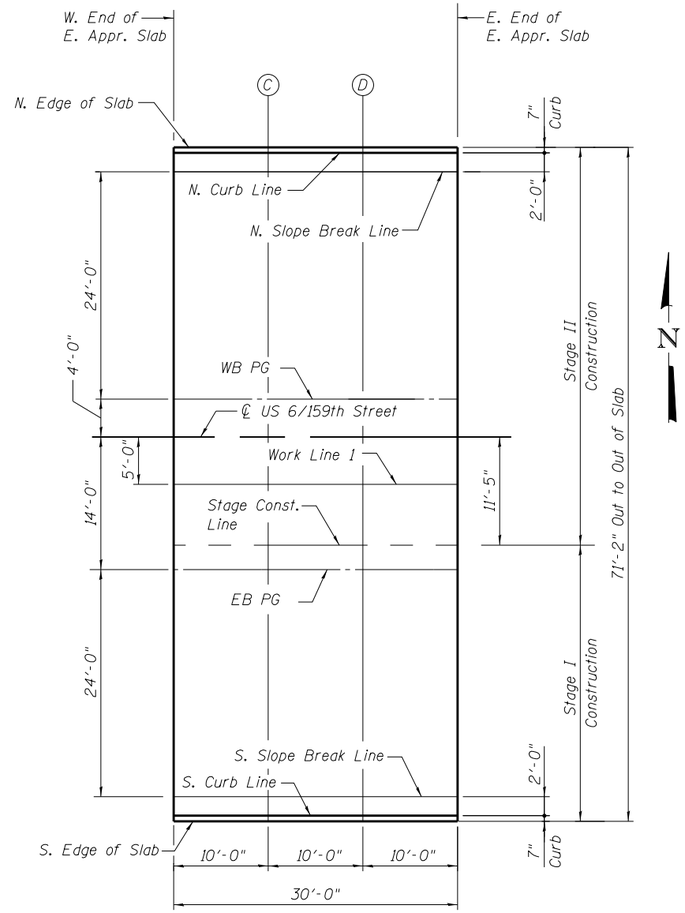

PLAN - DRY LAND BRIDGE 2 EAST APPROACH SLAB

NORTH EDGE OF SLAB

Location	Station	Offset	Theoretical Grade Elevations
W. End of W. Appr. Slab	381+74.55	-30.58	689.62
A	381+84.55	-30.58	689.58
B	381+94.55	-30.58	689.53
E. End of W. Appr. Slab	382+04.55	-30.58	689.48
W. End of E. Appr. Slab	390+56.55	-30.58	689.21
C	390+66.55	-30.58	689.25
D	390+76.55	-30.58	689.29
E. End of E. Appr. Slab	390+86.55	-30.58	689.33

NORTH CURB LINE

Location	Station	Offset	Theoretical Grade Elevations
W. End of W. Appr. Slab	381+74.55	-30.00	689.45
A	381+84.55	-30.00	689.41
B	381+94.55	-30.00	689.36
E. End of W. Appr. Slab	382+04.55	-30.00	689.31
W. End of E. Appr. Slab	390+56.55	-30.00	689.05
C	390+66.55	-30.00	689.09
D	390+76.55	-30.00	689.13
E. End of E. Appr. Slab	390+86.55	-30.00	689.17

NORTH SLOPE BREAK LINE

Location	Station	Offset	Theoretical Grade Elevations
W. End of W. Appr. Slab	381+74.55	-28.00	689.57
A	381+84.55	-28.00	689.53
B	381+94.55	-28.00	689.48
E. End of W. Appr. Slab	382+04.55	-28.00	689.43
W. End of E. Appr. Slab	390+56.55	-28.00	689.17
C	390+66.55	-28.00	689.21
D	390+76.55	-28.00	689.25
E. End of E. Appr. Slab	390+86.55	-28.00	689.29

WB PG

Location	Station	Offset	Theoretical Grade Elevations
W. End of W. Appr. Slab	381+74.55	-4.00	690.05
A	381+84.55	-4.00	690.01
B	381+94.55	-4.00	689.96
E. End of W. Appr. Slab	382+04.55	-4.00	689.91
W. End of E. Appr. Slab	390+56.55	-4.00	689.65
C	390+66.55	-4.00	689.69
D	390+76.55	-4.00	689.73
E. End of E. Appr. Slab	390+86.55	-4.00	689.77

\\MASCH\Chicago2\5186-US6\Struct\dgn\Land Bridges\Land Bridge 2 - 016-D011\016D011-60L72-017-SE.dgn

℄ US 6/159TH STREET

Location	Station	Offset	Theoretical Grade Elevations
W. End of W. Appr. Slab	381+74.55	0.00	690.11
A	381+84.55	0.00	690.07
B	381+94.55	0.00	690.02
E. End of W. Appr. Slab	382+04.55	0.00	689.97
W. End of E. Appr. Slab	390+56.55	0.00	689.71
C	390+66.55	0.00	689.75
D	390+76.55	0.00	689.79
E. End of E. Appr. Slab	390+86.55	0.00	689.83

WORK LINE 1

Location	Station	Offset	Theoretical Grade Elevations
W. End of W. Appr. Slab	381+74.55	5.00	690.19
A	381+84.55	5.00	690.15
B	381+94.55	5.00	690.10
E. End of W. Appr. Slab	382+04.55	5.00	690.05
W. End of E. Appr. Slab	390+56.55	5.00	689.78
C	390+66.55	5.00	689.82
D	390+76.55	5.00	689.86
E. End of E. Appr. Slab	390+86.55	5.00	689.90

STAGE CONSTRUCTION LINE

Location	Station	Offset	Theoretical Grade Elevations
W. End of W. Appr. Slab	381+74.55	11.42	690.09
A	381+84.55	11.42	690.05
B	381+94.55	11.42	690.00
E. End of W. Appr. Slab	382+04.55	11.42	689.95
W. End of E. Appr. Slab	390+56.55	11.42	689.68
C	390+66.55	11.42	689.72
D	390+76.55	11.42	689.76
E. End of E. Appr. Slab	390+86.55	11.42	689.80

EB PG

Location	Station	Offset	Theoretical Grade Elevations
W. End of W. Appr. Slab	381+74.55	14.00	690.05
A	381+84.55	14.00	690.01
B	381+94.55	14.00	689.96
E. End of W. Appr. Slab	382+04.55	14.00	689.91
W. End of E. Appr. Slab	390+56.55	14.00	689.65
C	390+66.55	14.00	689.69
D	390+76.55	14.00	689.73
E. End of E. Appr. Slab	390+86.55	14.00	689.77

WORK LINE 2

Location	Station	Offset	Theoretical Grade Elevations
W. End of W. Appr. Slab	381+74.55	38.00	689.57
A	381+84.55	38.00	689.53
B	381+94.55	38.00	689.48
E. End of W. Appr. Slab	382+04.55	38.00	689.43

SOUTH SLOPE BREAK LINE

Location	Station	Offset	Theoretical Grade Elevations
W. End of W. Appr. Slab	381+85.49	77.56	688.55
B	381+94.55	63.91	688.71
E. End of W. Appr. Slab	382+04.55	55.65	688.83
W. End of E. Appr. Slab	390+56.55	38.00	689.17
C	390+66.55	38.00	689.21
D	390+76.55	38.00	689.25
E. End of E. Appr. Slab	390+86.55	38.00	689.29

SOUTH CURB LINE

Location	Station	Offset	Theoretical Grade Elevations
W. End of W. Appr. Slab	381+87.01	79.08	688.42
B	381+94.55	66.91	688.55
E. End of W. Appr. Slab	382+04.55	58.03	688.70
W. End of E. Appr. Slab	390+56.55	40.00	689.05
C	390+66.55	40.00	689.09
D	390+76.55	40.00	689.13
E. End of E. Appr. Slab	390+86.55	40.00	689.17

SOUTH EDGE OF SLAB

Location	Station	Offset	Theoretical Grade Elevations
W. End of W. Appr. Slab	381+87.46	79.53	688.92
B	381+94.55	67.82	689.06
E. End of W. Appr. Slab	382+04.55	58.73	688.74
W. End of E. Appr. Slab	390+56.55	40.58	689.55
C	390+66.55	40.58	689.59
D	390+76.55	40.58	689.63
E. End of E. Appr. Slab	390+86.55	40.58	689.67

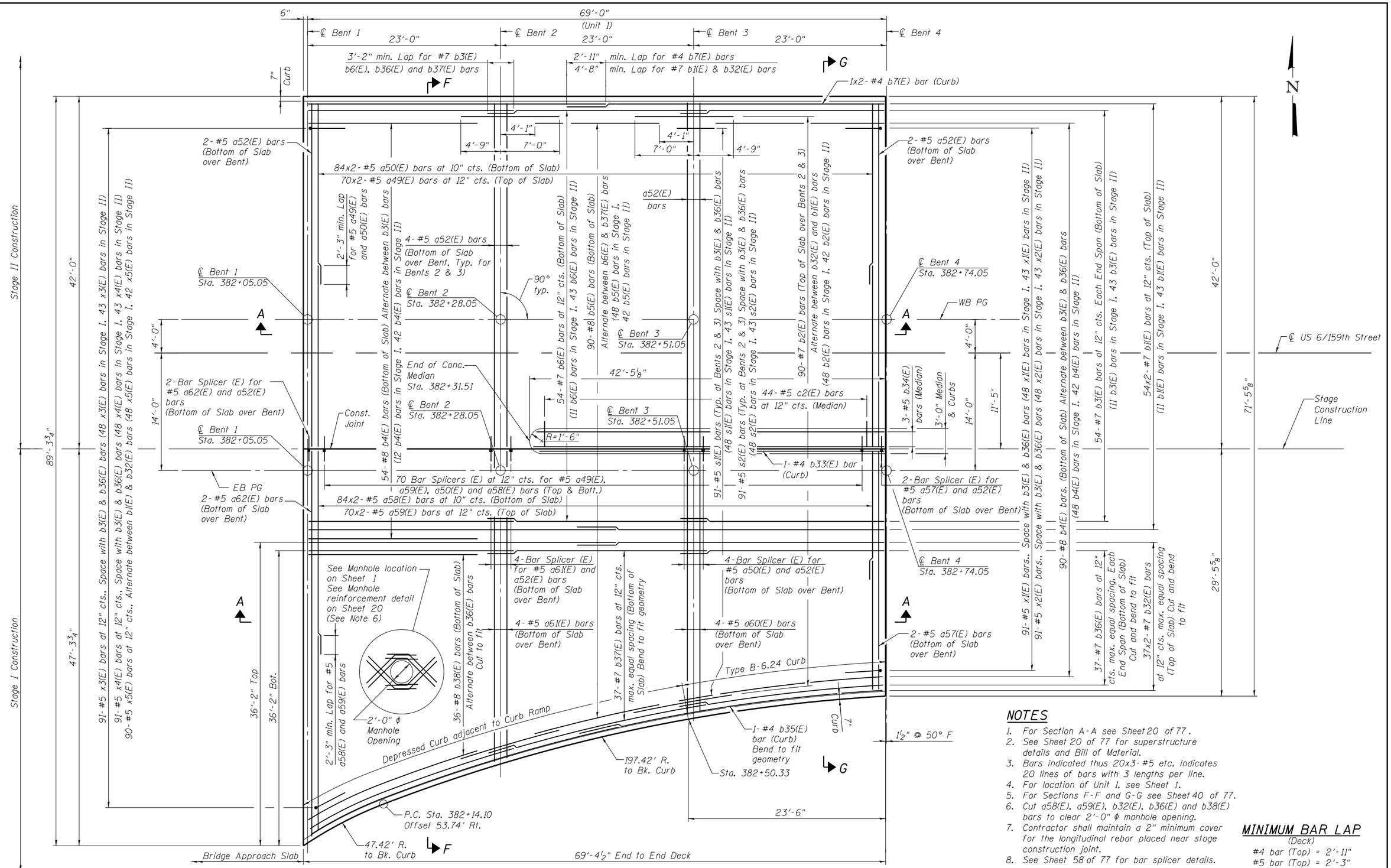

PLAN
Unit 1

NOTES

1. For Section A-A see Sheet 20 of 77.
2. See Sheet 20 of 77 for superstructure details and Bill of Material.
3. Bars indicated thus 20x3-#5 etc. indicates 20 lines of bars with 3 lengths per line.
4. For location of Unit 1, see Sheet 1.
5. For Sections F-F and G-G see Sheet 40 of 77.
6. Cut a58(E), a59(E), b32(E), b36(E) and b38(E) bars to clear 2'-0" ϕ manhole opening.
7. Contractor shall maintain a 2" minimum cover for the longitudinal rebar placed near stage construction joint.
8. See Sheet 58 of 77 for bar splicer details.

MINIMUM BAR LAP
(Deck)

#4 bar (Top) = 2'-11"
#5 bar (Top) = 2'-3"
#7 bar (Top) = 4'-8"
#7 bar = 3'-2"

LOCHNER
H. W. LOCHNER, INC.
225 WEST WASHINGTON STREET
12 TH FLOOR
CHICAGO, ILLINOIS 60606

USER NAME =	DESIGNED - LJB	REVISED
FILE NAME = 016D011-60L72-019-DP.dgn	CHECKED - RH	REVISED
PLOT SCALE =	DRAWN - EF	REVISED
PLOT DATE =	CHECKED - RH	REVISED

STATE OF ILLINOIS
DEPARTMENT OF TRANSPORTATION

DECK PLAN UNIT 1
STRUCTURE NO. 016-D011

SHEET NO. 19 OF 77 SHEETS

F.A.P. RTE.	SECTION	COUNTY	TOTAL SHEETS	SHEET NO.
351	2010-081-R	COOK	1045	444

CONTRACT NO. 60L72

ILLINOIS FED. AID PROJECT

\\NASCH1\Chicago2\5186-USB\Structs\dgn\Land Bridges\Land Bridge 2 - 016-D011\016D011-60L72-019-DP.dgn

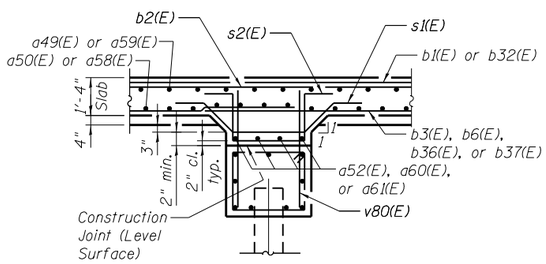

FIXED PILE BENT CAP SECTION

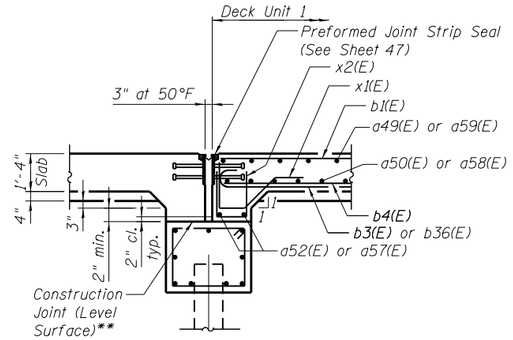

EXPANSION PILE BENT 4

** Top concrete surface of the expansion pier caps shall be finished to a very smooth finish. 1/8" neoprene sheet shall be placed on the entire top surface of the expansion pier caps prior to pouring the superstructure slab. Cost of furnishing and installing 1/8" neoprene sheet is included with CONCRETE STRUCTURES.

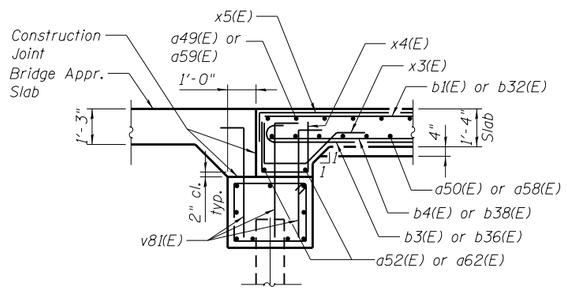

END PILE BENT 1 CAP SECTION

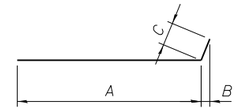

Bar	A	B	C
a49(E)	21'-11"	1"	6"
a59(E)	24'-7"	1"	6"

BARS a49(E) & a59(E)

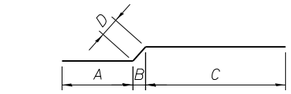

Bar	A	B	C	D
a50(E)	4'-1"	4"	17'-7"	6"
a58(E)	4'-1"	4"	20'-3"	6"

BARS a50(E) & a58(E)

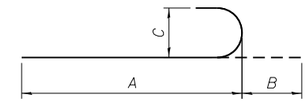

Bar	A	B	C
b3(E)	24'-11"	10"	7"
b36(E)	26'-10"	10"	7"

BARS b3(E) & b36(E)

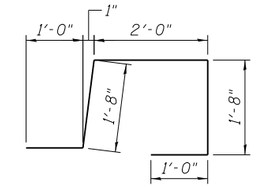

BAR c2(E)

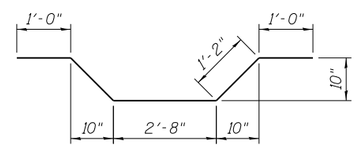

BAR s1(E)

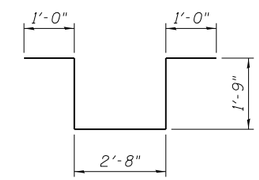

BAR s2(E)

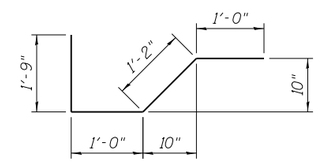

BAR x1(E)

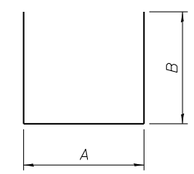

Bar	A	B
x2(E)	1'-0"	1'-9"
x4(E)	1'-8"	1'-9"

BARS x2(E) & x4(E)

BILL OF MATERIAL FOR UNIT 1

Bar	No.	Size	Length	Shape
a49(E)	140	#5	22'-5"	
a50(E)	168	#5	22'-2"	
a52(E)	12	#5	41'-8"	
a57(E)	2	#5	29'-1"	
a58(E)	168	#5	24'-10"	
a59(E)	140	#5	25'-1"	
a60(E)	4	#5	31'-9"	
a61(E)	4	#5	37'-2"	
a62(E)	2	#5	46'-11"	
a65(E)	16	#6	7'-4"	
b1(E)	108	#7	36'-11"	
b2(E)	180	#7	11'-9"	
b3(E)	108	#7	25'-9"	
b4(E)	144	#8	20'-1"	
b5(E)	90	#8	14'-10"	
b6(E)	54	#7	26'-2"	
b7(E)	2	#4	36'-1"	
b32(E)	74	#7	38'-4"	
b33(E)	1	#4	41'-4"	
b34(E)	3	#5	42'-1"	
b35(E)	1	#4	23'-5"	
b36(E)	74	#7	27'-8"	
b37(E)	37	#7	26'-10"	
b38(E)	36	#8	20'-11"	
c2(E)	44	#5	7'-4"	
s1(E)	182	#5	7'-0"	
s2(E)	182	#5	8'-2"	
x1(E)	91	#5	4'-11"	
x2(E)	91	#5	4'-6"	
x3(E)	91	#5	5'-7"	
x4(E)	91	#5	5'-2"	
x5(E)	90	#5	8'-10"	
Reinforcement Bars, Epoxy Coated			Pound	68,860
Concrete Superstructure			Cu. Yd.	318.4
Protective Coat			Sq. Yd.	609
Bridge Deck Grooving			Sq. Yd.	559

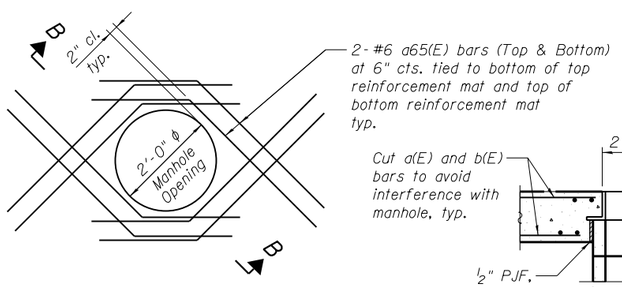

MANHOLE REINFORCEMENT

SECTION B-B

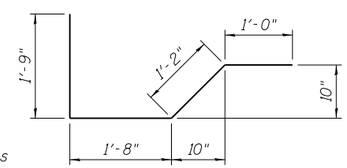

BAR x3(E)

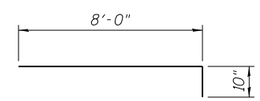

BAR x5(E)

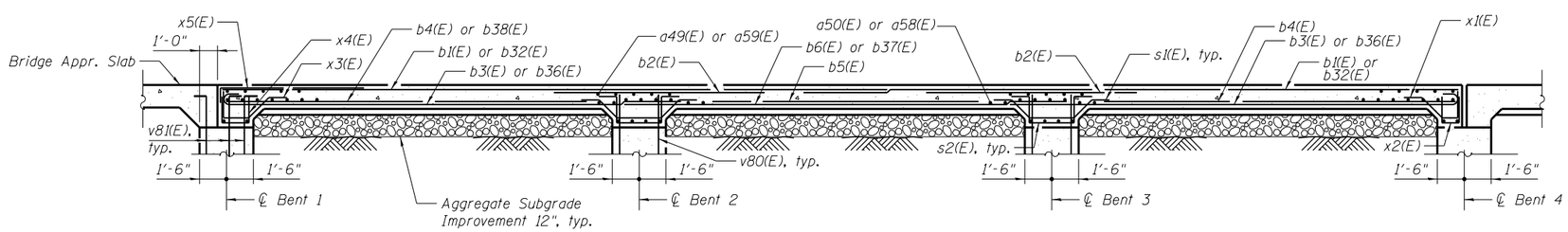

SECTION A-A

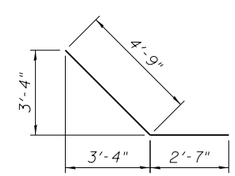

BAR a65(E)

NOTES

1. Tilt #5 a49(E) bars as required to maintain clearance.

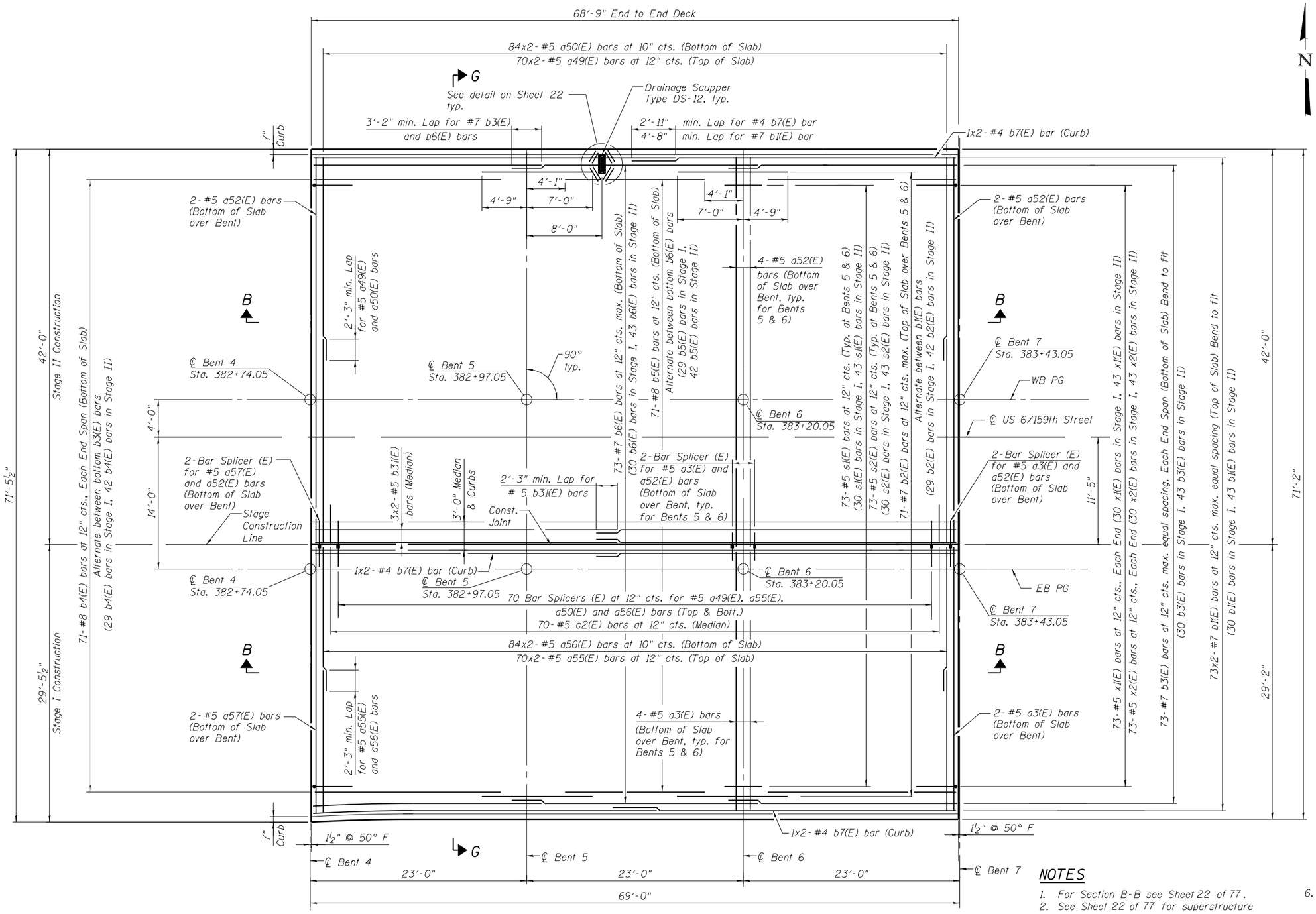

PLAN

Unit 2

MINIMUM BAR LAP

(Deck)

#4 bar (Top) = 2'-11"
#5 bar (Top) = 2'-3"
#7 bar (Top) = 4'-8"
#7 bar = 3'-2"

NOTES

1. For Section B-B see Sheet 22 of 77.
2. See Sheet 22 of 77 for superstructure details and Bill of Material.
3. Bars indicated thus 20x3-#5 etc. indicates 20 lines of bars with 3 lengths per line.
4. For location of Unit 2, see Sheet 1.
5. For Section G-G see Sheet 40 of 77.
6. Contractor shall maintain a 2" minimum cover for the longitudinal rebar placed near stage construction joint.
7. See Sheet 58 of 77 for bar splicer details.

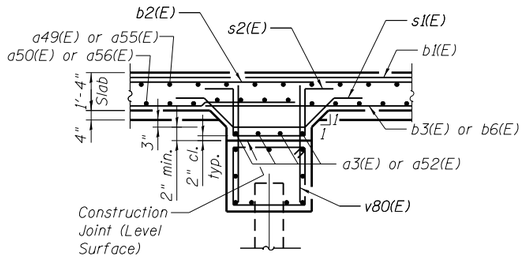

FIXED PILE BENT CAP SECTION

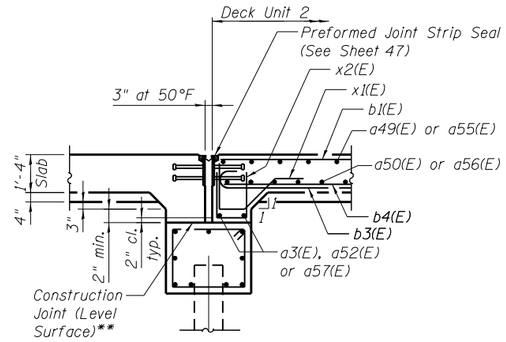

EXPANSION PILE BENT

** Top concrete surface of the expansion pier caps shall be finished to a very smooth finish. 1/8" neoprene sheet shall be placed on the entire top surface of the expansion pier caps prior to pouring the superstructure slab. Cost of furnishing and installing 1/8" neoprene sheet is included with CONCRETE STRUCTURES.

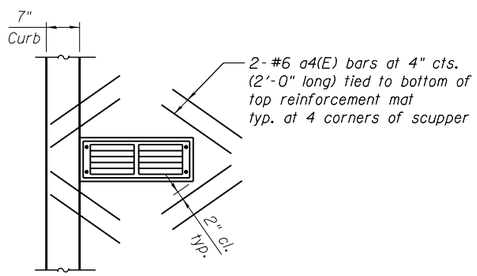

SCUPPER REINFORCEMENT

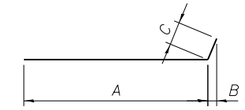

Bar	A	B	C
a49(E)	21'-11"	1"	6"
a55(E)	15'-8"	1"	6"

BARS a49(E) & a55(E)

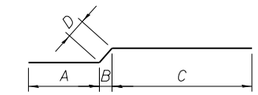

Bar	A	B	C	D
a50(E)	4'-1"	4"	17'-7"	6"
a56(E)	4'-1"	4"	11'-4"	6"

BARS a50(E) & a56(E)

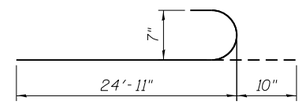

BARS b3(E)

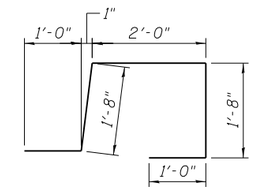

BAR c2(E)

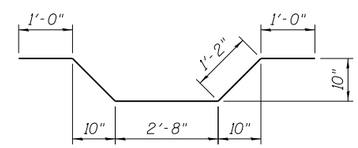

BAR s1(E)

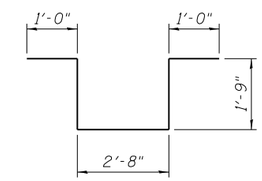

BAR s2(E)

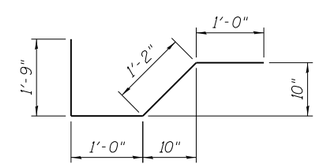

BAR x1(E)

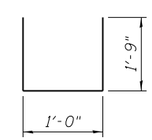

BAR x2(E)

BILL OF MATERIAL FOR UNIT 2

Bar	No.	Size	Length	Shape
a3(E)	10	#5	28'-10"	
a49(E)	140	#5	22'-5"	
a50(E)	168	#5	22'-2"	
a52(E)	12	#5	41'-8"	
a55(E)	140	#5	16'-2"	
a56(E)	168	#5	15'-11"	
a57(E)	2	#5	29'-1"	
b1(E)	146	#7	36'-11"	
b2(E)	142	#7	11'-9"	
b3(E)	146	#7	25'-9"	
b4(E)	142	#8	20'-1"	
b5(E)	71	#8	14'-10"	
b6(E)	73	#7	26'-2"	
b7(E)	6	#4	36'-1"	
b31(E)	6	#5	35'-6"	
c2(E)	70	#5	7'-4"	
s1(E)	146	#5	7'-0"	
s2(E)	146	#5	8'-2"	
x1(E)	146	#5	4'-11"	
x2(E)	146	#5	4'-6"	
Reinforcement Bars, Epoxy Coated			Pound	54.280
Concrete Superstructure			Cu. Yd.	290.4
Protective Coat			Sq. Yd.	558
Bridge Deck Grooving			Sq. Yd.	482

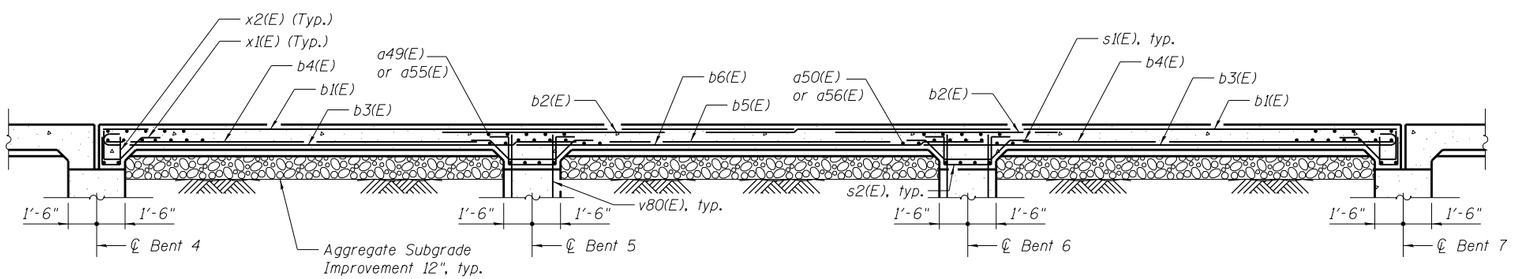

SECTION B-B

SCUPPER REINFORCEMENT BILL OF MATERIAL FOR SCUPPERS

Bar	No.	Size	Length	Shape
a4(E)	8	#6	2'-0"	
Reinforcement Bars, Epoxy Coated			Pound	30

The above quantities include reinforcement for 1 scupper.

NOTES

1. Cut b1(E) bars to clear drainage scuppers.
2. Space b3(E) thru b6(E) bars to avoid interference with drainage scuppers.

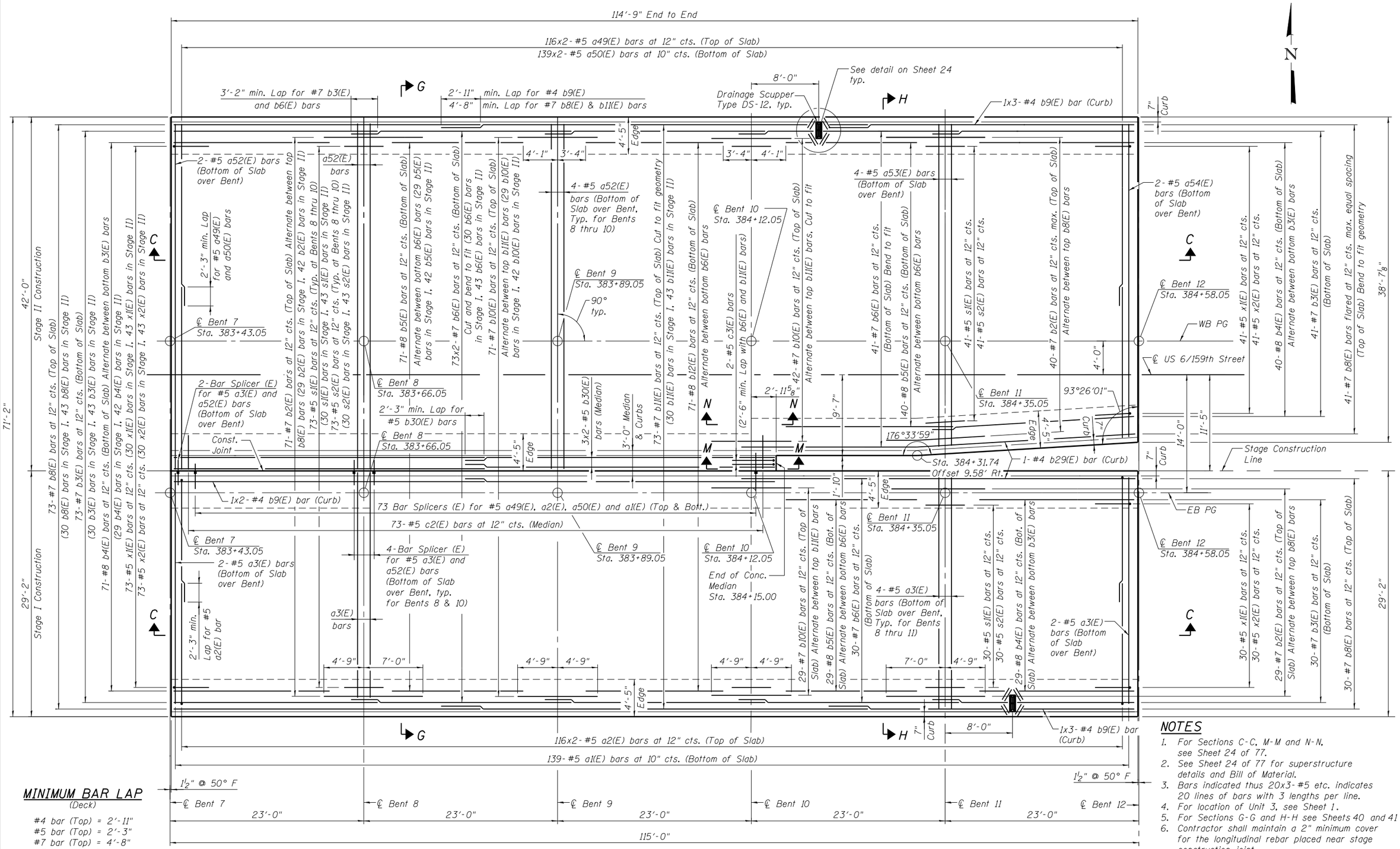

MINIMUM BAR LAP

(Deck)

#4 bar (Top) = 2'-11"
#5 bar (Top) = 2'-3"
#7 bar (Top) = 4'-8"
#7 bar = 3'-2"

PLAN

Unit 3

NOTES

1. For Sections C-C, M-M and N-N, see Sheet 24 of 77.
2. See Sheet 24 of 77 for superstructure details and Bill of Material.
3. Bars indicated thus 20x3-#5 etc. indicates 20 lines of bars with 3 lengths per line.
4. For location of Unit 3, see Sheet 1.
5. For Sections G-G and H-H see Sheets 40 and 41.
6. Contractor shall maintain a 2" minimum cover for the longitudinal rebar placed near stage construction joint.
7. See Sheet 58 of 77 for bar splicer details.

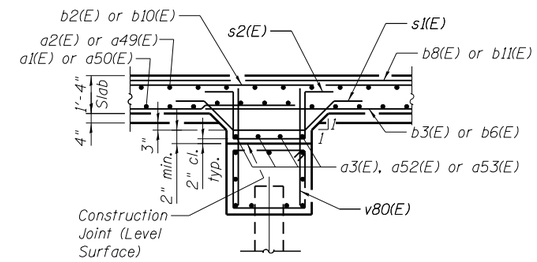

FIXED PILE BENT CAP SECTION

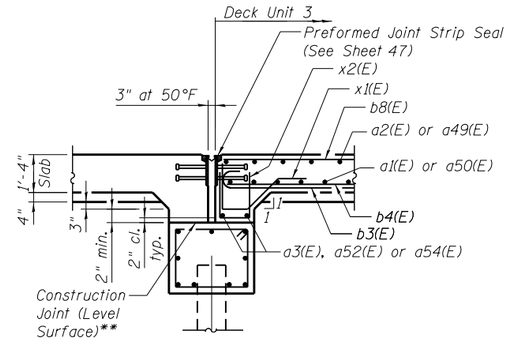

EXPANSION PILE BENT

** Top concrete surface of the expansion pier caps shall be finished to a very smooth finish. 1/8" neoprene sheet shall be placed on the entire top surface of the expansion pier caps prior to pouring the superstructure slab. Cost of furnishing and installing 1/8" neoprene sheet is included with CONCRETE STRUCTURES.

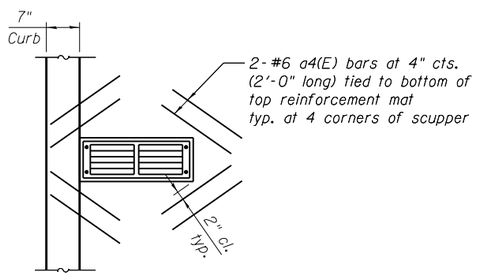

SCUPPER REINFORCEMENT

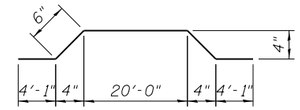

BAR a1(E)

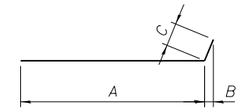

Bar	A	B	C
a2(E)	15'-7"	1"	6"
a49(E)	21'-11"	1"	6"

BARS a2(E) & a49(E)

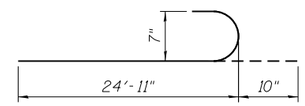

BARS b3(E)

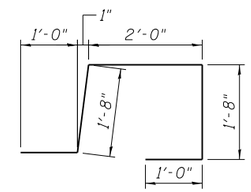

BAR c2(E)

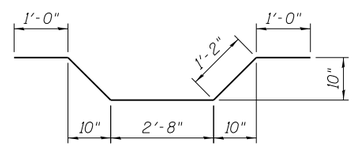

BAR s1(E)

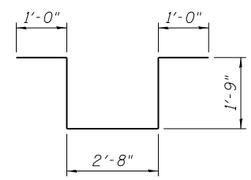

BAR s2(E)

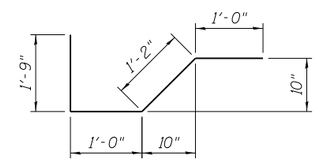

BAR x1(E)

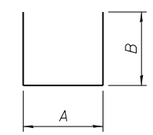

Bar	A	B
c3(E)	1'-3"	3'-10"
x2(E)	1'-0"	1'-9"

BARS c3(E) & x2(E)

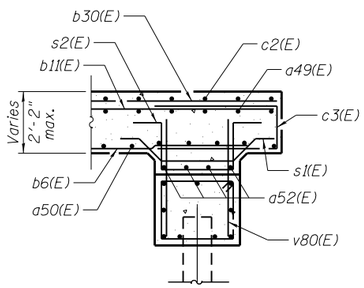

SECTION M-M

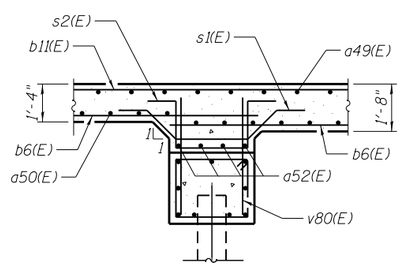

SECTION N-N

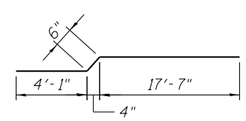

BAR a50(E)

NOTES

1. Cut b8(E) and b11(E) bars to clear drainage scuppers.
2. Space b3(E) thru b6(E) bars to avoid interference with drainage scuppers.

BILL OF MATERIAL FOR UNIT 3

Bar	No.	Size	Length	Shape
a1(E)	139	#5	29'-2"	
a2(E)	232	#5	16'-1"	
a3(E)	20	#5	28'-10"	
a49(E)	232	#5	22'-5"	
a50(E)	278	#5	22'-2"	
a52(E)	14	#5	41'-8"	
a53(E)	4	#5	39'-7"	
a54(E)	2	#5	38'-3"	
b2(E)	140	#7	11'-9"	
b3(E)	144	#7	25'-9"	
b4(E)	140	#8	20'-1"	
b5(E)	140	#8	14'-10"	
b6(E)	217	#7	26'-2"	
b8(E)	144	#7	37'-2"	
b9(E)	8	#4	40'-4"	
b10(E)	142	#7	9'-6"	
b11(E)	73	#7	50'-8"	
b12(E)	71	#8	16'-4"	
b29(E)	2	#4	45'-10"	
b30(E)	6	#5	36'-11"	
c2(E)	73	#5	7'-4"	
c3(E)	2	#5	8'-11"	
s1(E)	290	#5	7'-0"	
s2(E)	290	#5	8'-2"	
x1(E)	144	#5	4'-11"	
x2(E)	144	#5	4'-6"	
Reinforcement Bars, Epoxy Coated			Pound	88,470
Concrete Superstructure			Cu. Yd.	478.3
Protective Coat			Sq. Yd.	922
Bridge Deck Grooving			Sq. Yd.	883

SCUPPER REINFORCEMENT BILL OF MATERIAL FOR SCUPPERS

Bar	No.	Size	Length	Shape
a4(E)	16	#6	2'-0"	
Reinforcement Bars, Epoxy Coated			Pound	60

The above quantities include reinforcement for 2 scuppers.

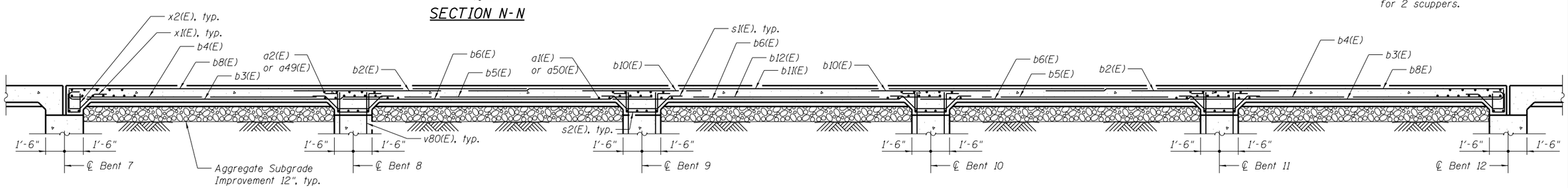

SECTION C-C

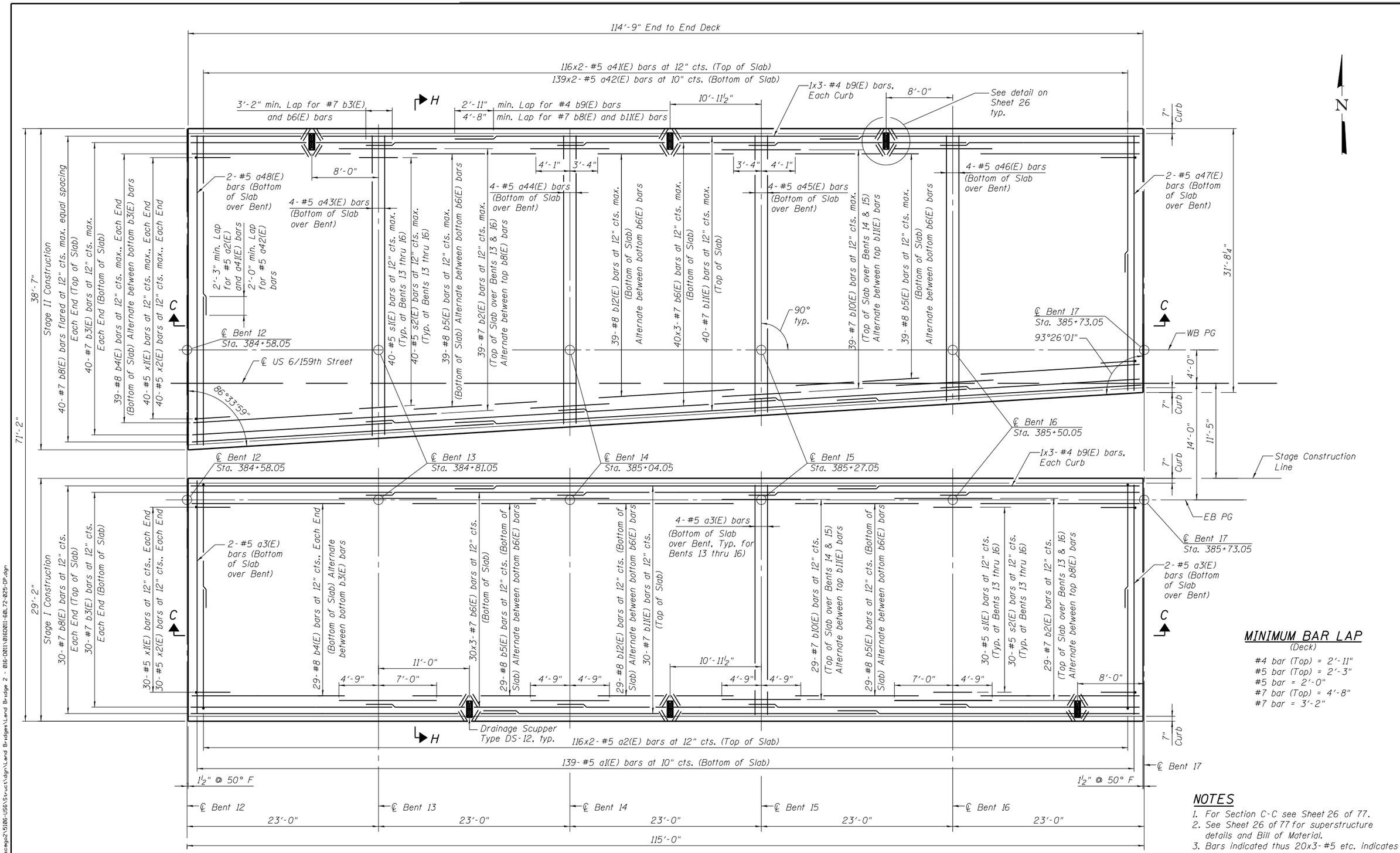

PLAN
Unit 4

MINIMUM BAR LAP
(Deck)

#4 bar (Top) = 2'-11"
#5 bar (Top) = 2'-3"
#5 bar = 2'-0"
#7 bar (Top) = 4'-8"
#7 bar = 3'-2"

NOTES

1. For Section C-C see Sheet 26 of 77.
2. See Sheet 26 of 77 for superstructure details and Bill of Material.
3. Bars indicated thus 20x3-#5 etc. indicates 20 lines of bars with 3 lengths per line.
4. For location of Unit 4, see Sheet 1.
5. For Section H-H see Sheet 41.

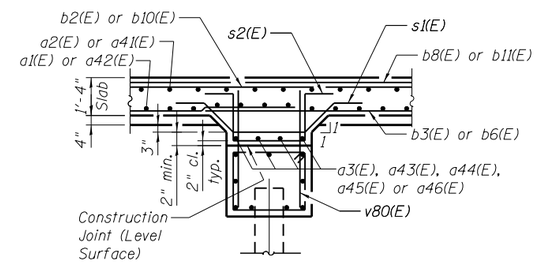

FIXED PILE BENT CAP SECTION

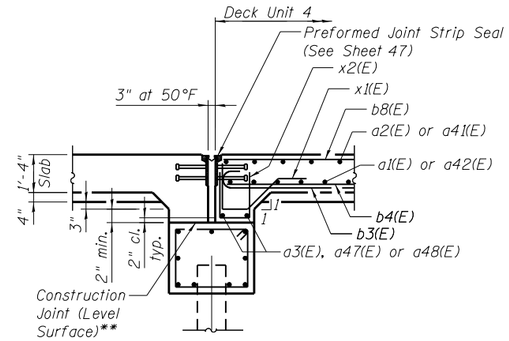

EXPANSION PILE BENT

** Top concrete surface of the expansion pier caps shall be finished to a very smooth finish. 1/8" neoprene sheet shall be placed on the entire top surface of the expansion pier caps prior to pouring the superstructure slab. Cost of furnishing and installing 1/8" neoprene sheet is included with CONCRETE STRUCTURES.

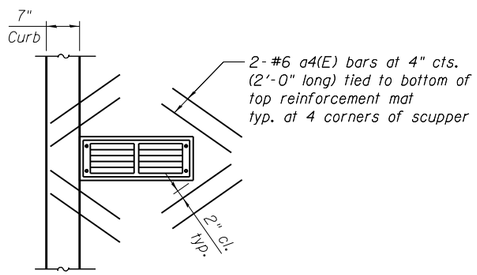

SCUPPER REINFORCEMENT

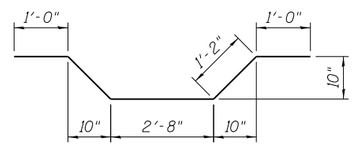

BAR s1(E)

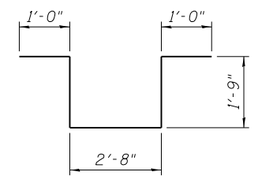

BAR s2(E)

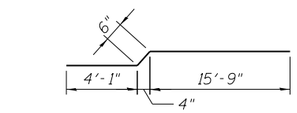

BAR a42(E)

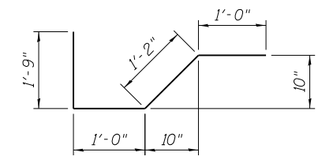

BAR x1(E)

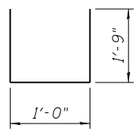

BAR x2(E)

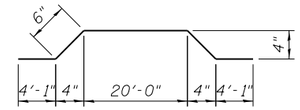

BAR a1(E)

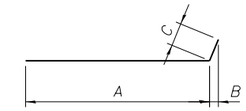

Bar	A	B	C
a2(E)	15'-7"	1"	6"
a41(E)	20'-3"	1"	6"

BARS a2(E) & a41(E)

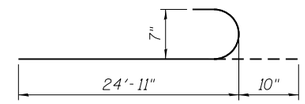

BARS b3(E)

BILL OF MATERIAL FOR UNIT 4

Bar	No.	Size	Length	Shape
a1(E)	139	#5	29'-2"	
a2(E)	232	#5	16'-1"	
a3(E)	20	#5	28'-10"	
a41(E)	232	#5	20'-9"	
a42(E)	278	#5	20'-2"	
a43(E)	4	#5	36'-11"	
a44(E)	4	#5	35'-6"	
a45(E)	4	#5	34'-1"	
a46(E)	4	#5	32'-9"	
a47(E)	2	#5	31'-4"	
a48(E)	2	#5	38'-3"	
b2(E)	136	#7	11'-9"	
b3(E)	140	#7	25'-9"	
b4(E)	136	#8	20'-1"	
b5(E)	136	#8	14'-10"	
b6(E)	210	#7	26'-2"	
b8(E)	140	#7	37'-2"	
b9(E)	12	#4	40'-4"	
b10(E)	136	#7	9'-6"	
b11(E)	70	#7	50'-8"	
b12(E)	68	#8	16'-4"	
s1(E)	280	#5	7'-0"	
s2(E)	280	#5	8'-2"	
x1(E)	140	#5	4'-11"	
x2(E)	140	#5	4'-6"	
Reinforcement Bars, Epoxy Coated			Pound	84,490
Concrete Superstructure			Cu. Yd.	437.2
Protective Coat			Sq. Yd.	843
Bridge Deck Grooving			Sq. Yd.	740

SCUPPER REINFORCEMENT BILL OF MATERIAL FOR SCUPPERS

Bar	No.	Size	Length	Shape
a4(E)	48	#6	2'-0"	
Reinforcement Bars, Epoxy Coated			Pound	180

The above quantities include reinforcement for 6 scuppers.

NOTES

1. Cut b8(E) and b11(E) bars to clear drainage scuppers.
2. Space b3(E) thru b6(E) bars to avoid interference with drainage scuppers.

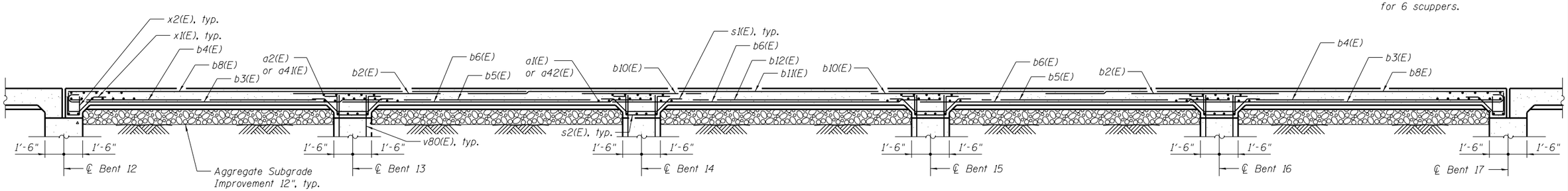

SECTION C-C

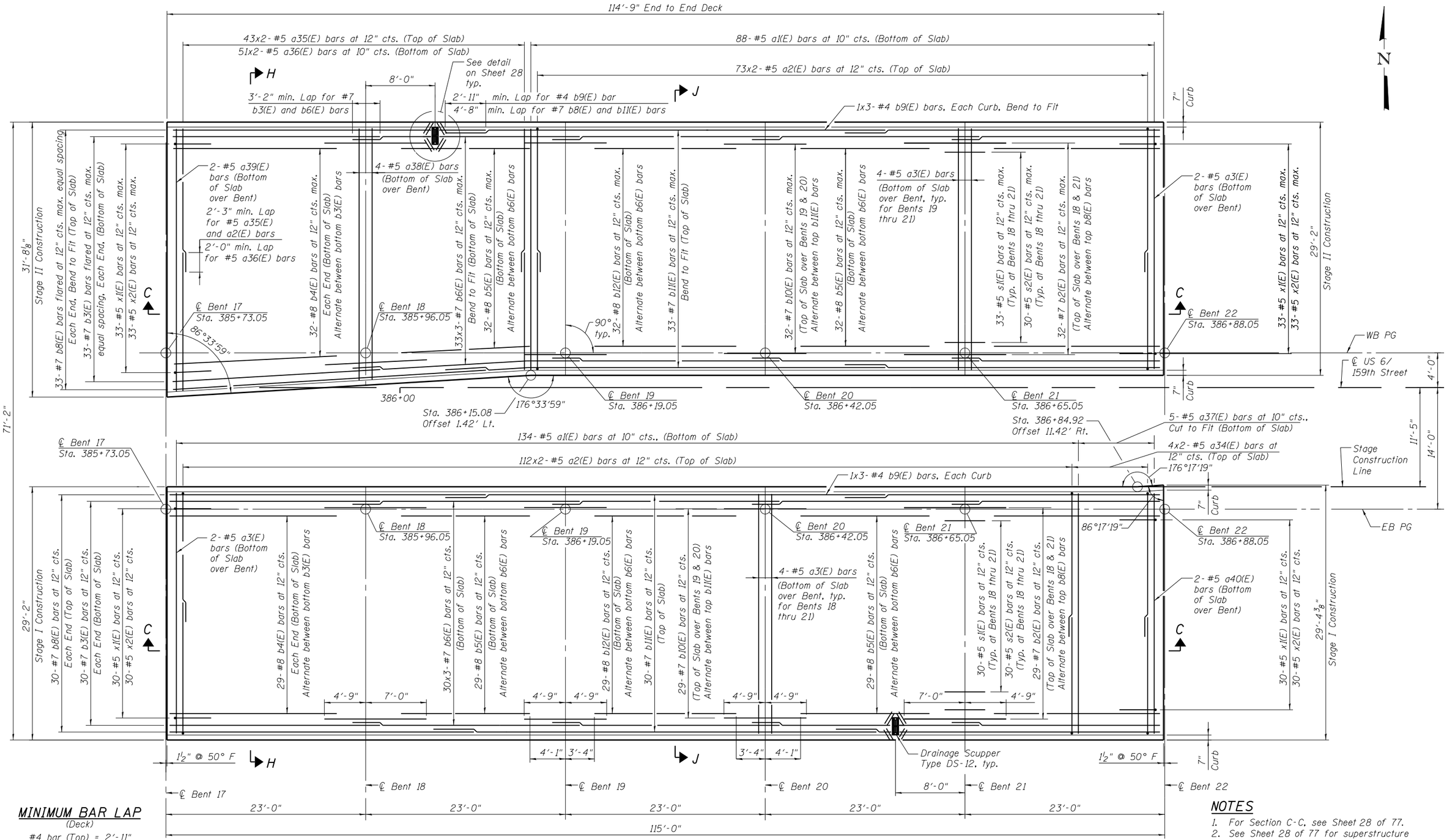

PLAN
Unit 5

MINIMUM BAR LAP
(Deck)

#4 bar (Top) = 2'-11"
#5 bar (Top) = 2'-3"
#5 bar = 2'-0"
#7 bar (Top) = 4'-8"
#7 bar = 3'-2"

NOTES

1. For Section C-C, see Sheet 28 of 77.
2. See Sheet 28 of 77 for superstructure details and Bill of Material.
3. Bars indicated thus 20x3-#5 etc. indicates 20 lines of bars with 3 lengths per line.
4. For location of Unit 5, see Sheets 1 and 2.
5. For Sections H-H and J-J see Sheet 41.

LOCHNER
H. W. LOCHNER, INC.
225 WEST WASHINGTON STREET
12 TH FLOOR
CHICAGO, ILLINOIS 60606

USER NAME =	DESIGNED - LJB	REVISED
FILE NAME = 016D011-60L72-027-DP.dgn	CHECKED - RH	REVISED
PLOT SCALE =	DRAWN - EF	REVISED
PLOT DATE =	CHECKED - RH	REVISED

STATE OF ILLINOIS
DEPARTMENT OF TRANSPORTATION

DECK PLAN UNIT 5
STRUCTURE NO. 016-D011

SHEET NO. 27 OF 77 SHEETS

F.A.P. RTE.	SECTION	COUNTY	TOTAL SHEETS	SHEET NO.
351	2010-081-R	COOK	1045	452
		CONTRACT NO. 60L72		
		ILLINOIS FED. AID PROJECT		

\\WASCHI\Chicago2\5106-USGS\Struct\dgn\Land Bridges\Land Bridge 2 - 016-D011\016D011-60L72-027-DP.dgn

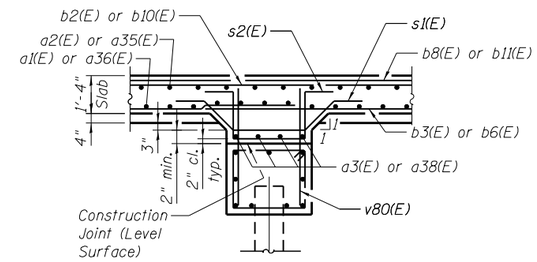

FIXED PILE BENT CAP SECTION

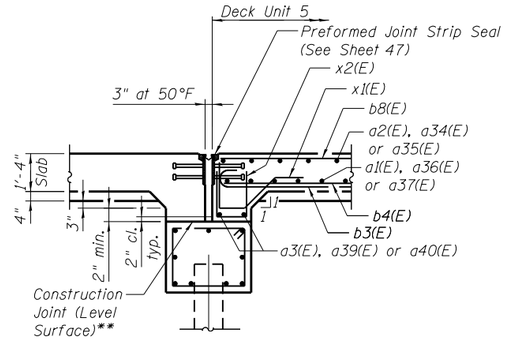

EXPANSION PILE BENT

** Top concrete surface of the expansion pier caps shall be finished to a very smooth finish. 1/8" neoprene sheet shall be placed on the entire top surface of the expansion pier caps prior to pouring the superstructure slab. Cost of furnishing and installing 1/8" neoprene sheet is included with CONCRETE STRUCTURES.

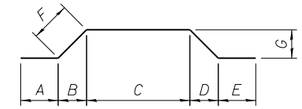

Bar	A	B	C	D	E	F	G
a1(E)	4'-1"	4"	20'-0"	4"	4'-1"	6"	4"
a37(E)	4'-1"	4"	20'-2"	4"	4'-1"	6"	4"

BARS a1(E) & a37(E)

BILL OF MATERIAL FOR UNIT 5

Bar	No.	Size	Length	Shape
a1(E)	222	#5	29'-2"	
a2(E)	370	#5	16'-1"	
a3(E)	32	#5	28'-10"	
a34(E)	8	#5	16'-2"	
a35(E)	86	#5	17'-4"	
a36(E)	102	#5	16'-10"	
a37(E)	5	#5	29'-4"	
a38(E)	4	#5	29'-11"	
a39(E)	2	#5	31'-4"	
a40(E)	2	#5	29'-0"	
b2(E)	122	#7	11'-9"	
b3(E)	126	#7	25'-9"	
b4(E)	122	#8	20'-1"	
b5(E)	122	#8	14'-10"	
b6(E)	189	#7	26'-2"	
b8(E)	126	#7	37'-2"	
b9(E)	12	#4	40'-4"	
b10(E)	122	#7	9'-6"	
b11(E)	63	#7	50'-8"	
b12(E)	61	#8	16'-4"	
s1(E)	252	#5	7'-0"	
s2(E)	252	#5	8'-2"	
x1(E)	126	#5	4'-11"	
x2(E)	126	#5	4'-6"	
Reinforcement Bars, Epoxy Coated			Pound	75,530
Concrete Superstructure			Cu. Yd.	402.8
Protective Coat			Sq. Yd.	774
Bridge Deck Grooving			Sq. Yd.	670

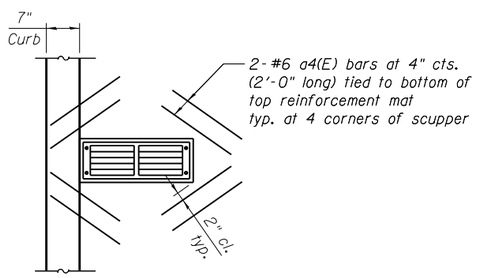

SCUPPER REINFORCEMENT

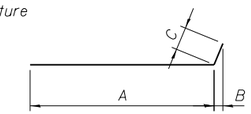

Bar	A	B	C
a2(E)	15'-7"	1"	6"
a34(E)	15'-8"	1"	6"
a35(E)	16'-10"	1"	6"

BARS a2(E), a34(E) & a35(E)

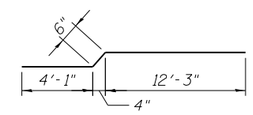

BAR a36(E)

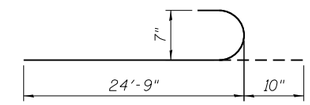

BAR b3(E)

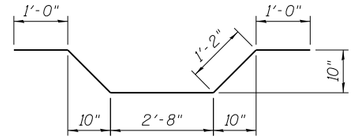

BAR s1(E)

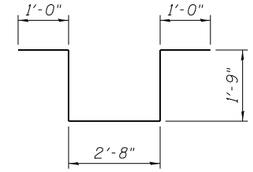

BAR s2(E)

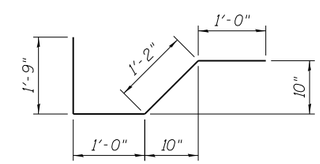

BAR x1(E)

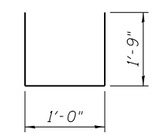

BAR x2(E)

SCUPPER REINFORCEMENT BILL OF MATERIAL FOR SCUPPERS

Bar	No.	Size	Length	Shape
a4(E)	16	#6	2'-0"	
Reinforcement Bars, Epoxy Coated			Pound	60

The above quantities include reinforcement for 2 scuppers.

NOTES

1. Cut b8(E) bars to clear drainage scuppers.
2. Space b3(E) thru b6(E) bars to avoid interference with drainage scuppers.

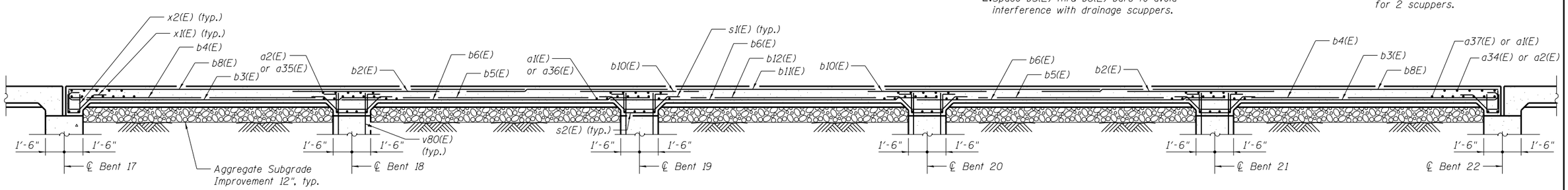

SECTION C-C

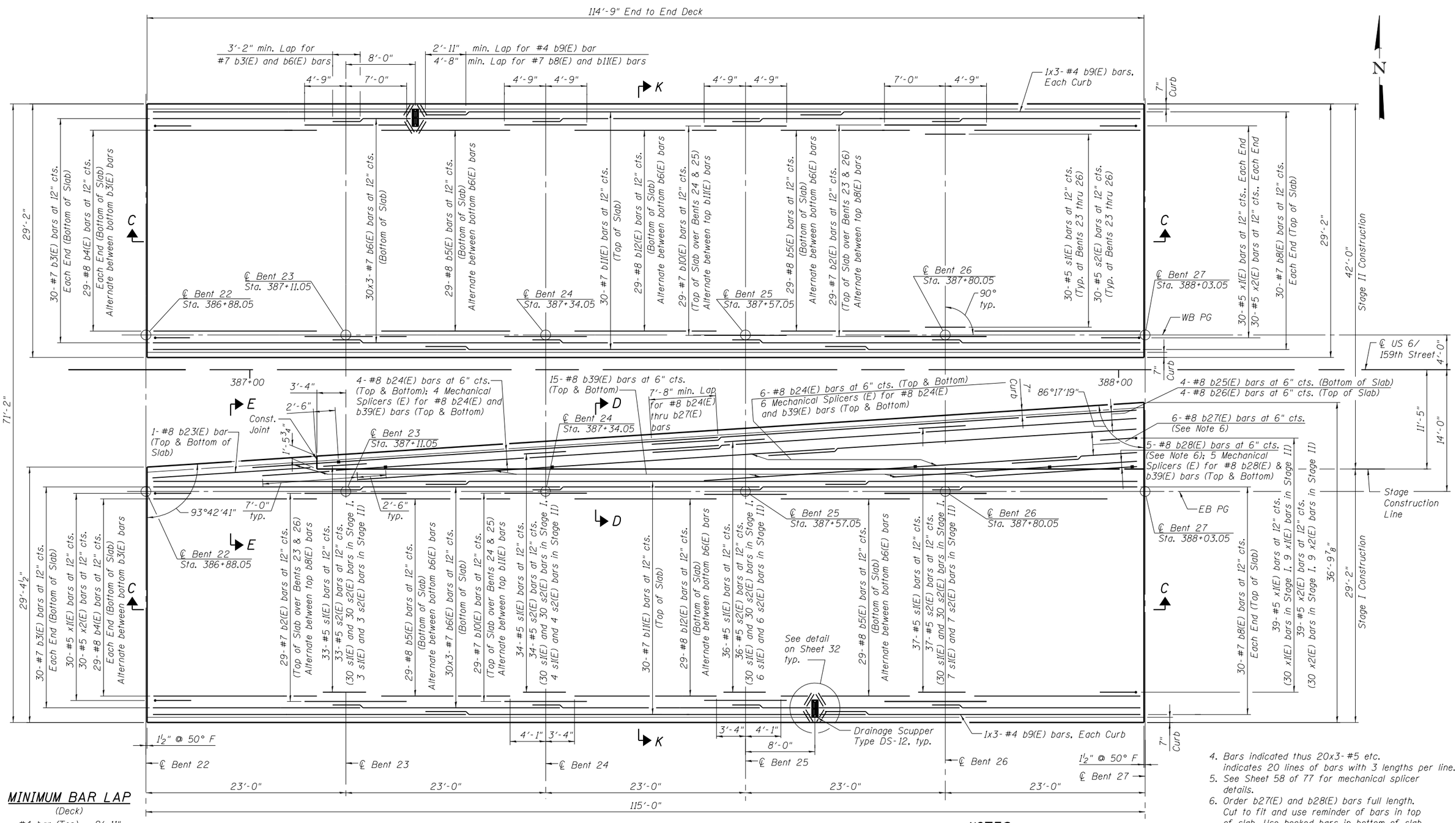

MINIMUM BAR LAP

(Deck)

#4 bar (Top) = 2'-11"
#5 bar (Top) = 2'-3"
#7 bar (Top) = 4'-8"
#7 bar = 3'-2"
#8 bar = 7'-8"

PLAN

Unit 6

NOTES

1. For Sections D-D and E-E see Sheet 31 of 77.
2. For Section C-C see Sheet 32 of 77.
3. See Sheet 32 of 77 for superstructure details and Bill of Material.
4. Bars indicated thus 20x3-#5 etc. indicates 20 lines of bars with 3 lengths per line.
5. See Sheet 58 of 77 for mechanical splicer details.
6. Order b27(E) and b28(E) bars full length. Cut to fit and use reminder of bars in top of slab. Use hooked bars in bottom of slab.
7. For location of Unit 6, see Sheet 2.
8. Work this sheet with Sheet 30.
9. For Section K-K see Sheet 42.
10. Contractor shall maintain a 2" minimum cover for the longitudinal rebar placed near the stage construction joint.

LOCHNER
H. W. LOCHNER, INC.
225 WEST WASHINGTON STREET
12 TH FLOOR
CHICAGO, ILLINOIS 60606

USER NAME =	DESIGNED - LJB	REVISED
FILE NAME = 016D011-60L72-029-DP.dgn	CHECKED - RH	REVISED
PLOT SCALE =	DRAWN - EF	REVISED
PLOT DATE =	CHECKED - RH	REVISED

STATE OF ILLINOIS
DEPARTMENT OF TRANSPORTATION

DECK PLAN I UNIT 6
STRUCTURE NO. 016-D011

SHEET NO. 29 OF 77 SHEETS

F.A.P. RTE.	SECTION	COUNTY	TOTAL SHEETS	SHEET NO.
351	2010-081-R	COOK	1045	454
		CONTRACT NO. 60L72		
		ILLINOIS FED. AID PROJECT		

\\MASCH1\Chicago2\5106-USS\Struct\dgn\Land Bridges\Land Bridge 2 - 016-D011\016D011-60L72-029-DP.dgn

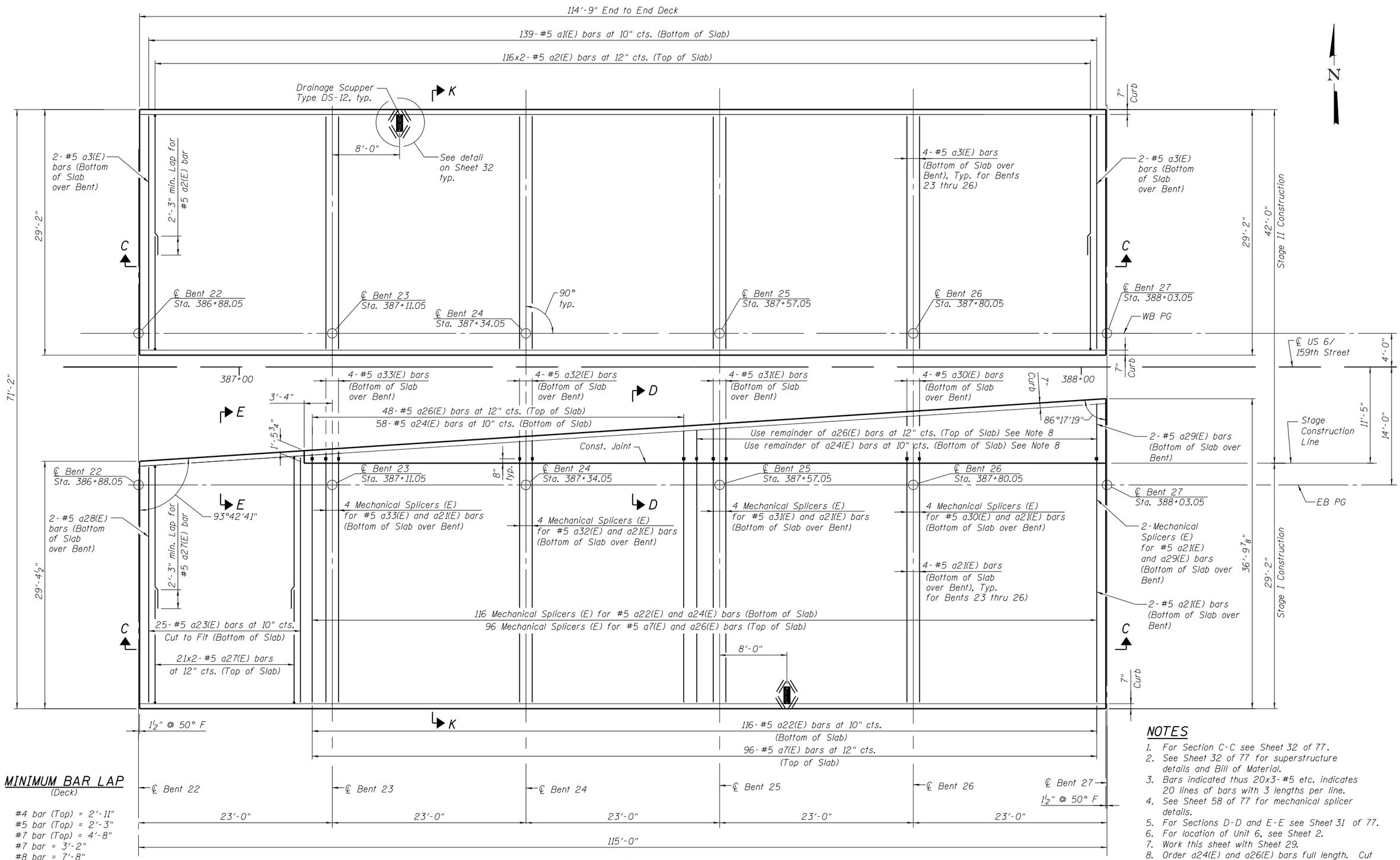

MINIMUM BAR LAP
(Deck)

#4 bar (Top) = 2'-11"
#5 bar (Top) = 2'-3"
#7 bar (Top) = 4'-8"
#7 bar = 3'-2"
#8 bar = 7'-8"

PLAN
Unit 6

NOTES

1. For Section C-C see Sheet 32 of 77.
2. See Sheet 32 of 77 for superstructure details and Bill of Material.
3. Bars indicated thus 20x3-#5 etc. indicates 20 lines of bars with 3 lengths per line.
4. See Sheet 58 of 77 for mechanical splicer details.
5. For Sections D-D and E-E see Sheet 31 of 77.
6. For location of Unit 6, see Sheet 2.
7. Work this sheet with Sheet 29.
8. Order a24(E) and a26(E) bars full length. Cut to fit and use remainder of bars in adjacent area.
9. For Section K-K see Sheet 42.

LOCHNER
H. W. LOCHNER, INC.
225 WEST WASHINGTON STREET
12 TH FLOOR
CHICAGO, ILLINOIS 60606

USER NAME =	DESIGNED - LJB	REVISED
FILE NAME = 016D011-60L72-030-DP.dgn	CHECKED - RH	REVISED
PLOT SCALE =	DRAWN - EF	REVISED
PLOT DATE =	CHECKED - RH	REVISED

STATE OF ILLINOIS
DEPARTMENT OF TRANSPORTATION

DECK PLAN II UNIT 6
STRUCTURE NO. 016-D011

SHEET NO. 30 OF 77 SHEETS

F.A.P. RTE.	SECTION	COUNTY	TOTAL SHEETS	SHEET NO.
351	2010-081-R	COOK	1045	455

CONTRACT NO. 60L72

ILLINOIS FED. AID PROJECT

\\MASCH1\Chicago2\5186-USS\Struct\dgn\Lend Bridges\Lend Bridge 2 - 016-D011\016D011-60L72-030-DP.dgn

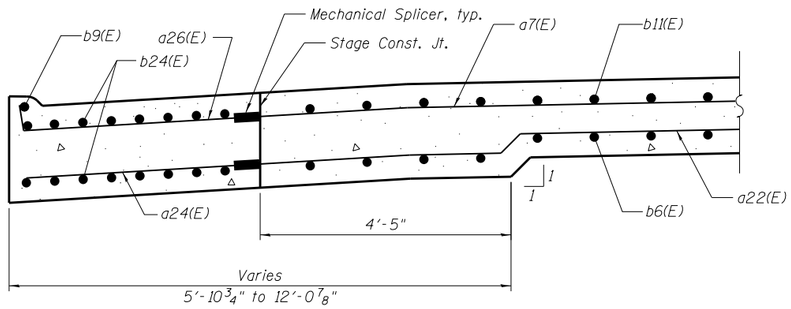

SECTION D-D

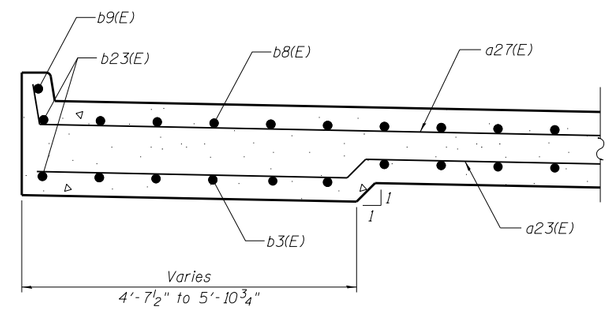

SECTION E-E

NOTE

1. For locations of SECTION D-D and SECTION E-E, see Sheet 29.

\\MASCH1\Chicago2\5106-USB\Struct\dgn\Lend Bridges\Lend Bridge 2 - 016-D011\016D011-60L72-031-DP.dgn

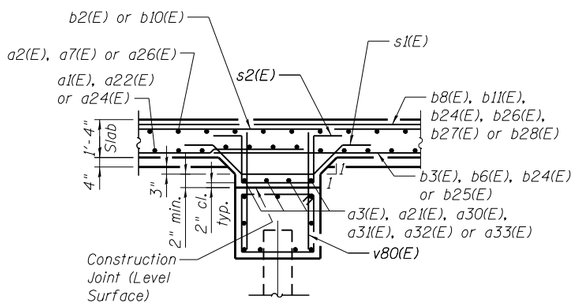

FIXED PILE BENT CAP SECTION

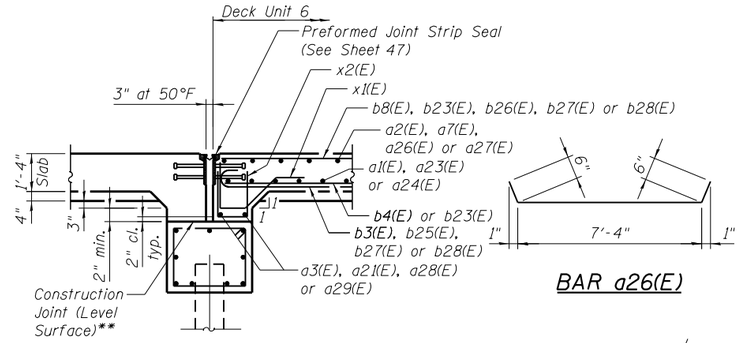

EXPANSION PILE BENT

** Top concrete surface of the expansion pier caps shall be finished to a very smooth finish. 1/8" neoprene sheet shall be placed on the entire top surface of the expansion pier caps prior to pouring the superstructure slab. Cost of furnishing and installing 1/8" neoprene sheet is included with CONCRETE STRUCTURES.

BAR a26(E)

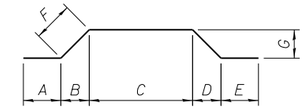

Bar	A	B	C	D	E	F	G
a1(E)	4'-1"	4"	20'-0"	4"	4'-1"	6"	4"
a22(E)	4'-11"	4"	20'-0"	4"	4'-1"	6"	4"
a23(E)	5'-6"	4"	20'-0"	4"	4'-1"	6"	4"

BARS a1(E), a22(E) & a23(E)

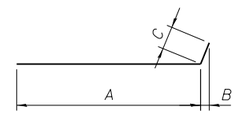

Bar	A	B	C
a2(E)	15'-7"	1"	6"
a7(E)	29'-7"	1"	6"
a27(E)	16'-3"	1"	6"

BARS a2(E), a7(E) & a27(E)

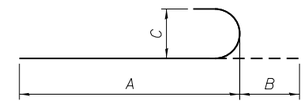

Bar	A	B	C
b3(E)	24'-11"	10"	7"
b25(E)	57'-8"	10"	7"
b27(E)	55'-1"	10"	7"
b28(E)	40'-7"	10"	7"

BARS b3(E), b25(E), b27(E) & b28(E)

BILL OF MATERIAL FOR UNIT 6

Bar	No.	Size	Length	Shape
a1(E)	139	#5	29'-2"	
a2(E)	232	#5	16'-1"	
a3(E)	20	#5	28'-10"	
a7(E)	96	#5	30'-1"	
a21(E)	18	#5	29'-8"	
a22(E)	116	#5	30'-0"	
a23(E)	25	#5	30'-7"	
a24(E)	58	#5	7'-6"	
a26(E)	48	#5	8'-4"	
a27(E)	42	#5	16'-9"	
a28(E)	2	#5	29'-0"	
a29(E)	2	#5	6'-10"	
a30(E)	4	#5	5'-4"	
a31(E)	4	#5	3'-10"	
a32(E)	4	#5	2'-4"	
a33(E)	4	#5	0'-10"	
b2(E)	116	#7	11'-9"	
b3(E)	120	#7	25'-9"	
b4(E)	116	#8	20'-1"	
b5(E)	116	#8	14'-10"	
b6(E)	180	#7	26'-2"	
b8(E)	120	#7	37'-2"	
b9(E)	12	#4	40'-4"	
b10(E)	116	#7	9'-6"	
b11(E)	60	#7	50'-8"	
b12(E)	58	#8	16'-4"	
b23(E)	2	#8	19'-3"	
b24(E)	20	#8	43'-0"	
b25(E)	4	#8	58'-6"	
b26(E)	4	#8	57'-8"	
b27(E)	6	#8	55'-11"	
b28(E)	5	#8	41'-5"	
b39(E)	30	#8	9'-6"	
s1(E)	260	#5	7'-0"	
s2(E)	260	#5	8'-2"	
x1(E)	129	#5	4'-11"	
x2(E)	129	#5	4'-6"	
Reinforcement Bars, Epoxy Coated			Pound	79,660
Concrete Superstructure			Cu. Yd.	424.3
Protective Coat			Sq. Yd.	817
Bridge Deck Grooving			Sq. Yd.	714

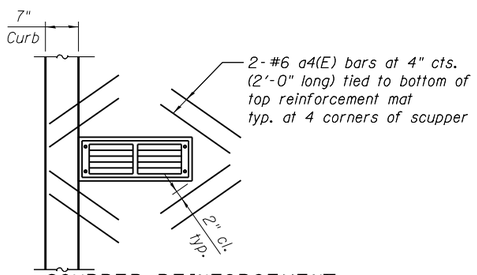

SCUPPER REINFORCEMENT

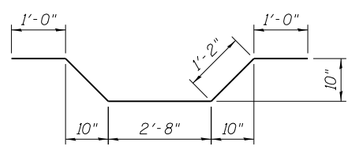

BAR s1(E)

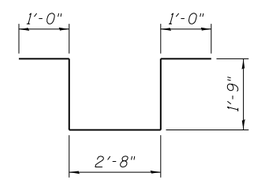

BAR s2(E)

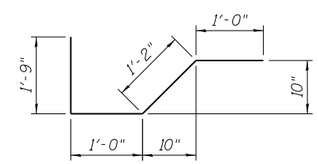

BAR x1(E)

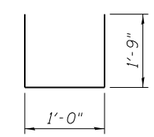

BAR x2(E)

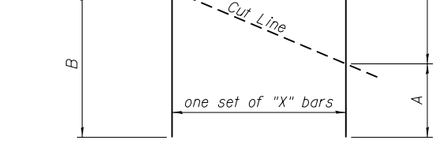

FIELD CUTTING DIAGRAM

Bar	A	B	X
b27(E)	8'-2"	46'-11"	6
b28(E)	4'-10"	35'-9"	5

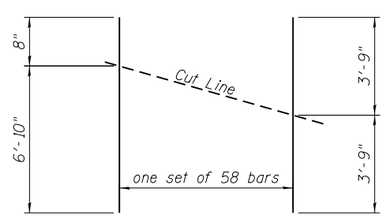

FIELD CUTTING DIAGRAM BAR a24(E)

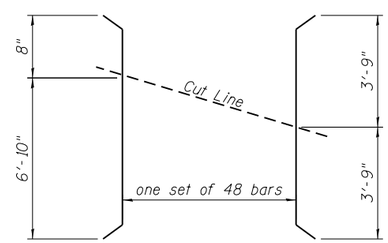

FIELD CUTTING DIAGRAM BAR a26(E)

SCUPPER REINFORCEMENT BILL OF MATERIAL FOR SCUPPERS

Bar	No.	Size	Length	Shape
a4(E)	16	#6	2'-0"	
Reinforcement Bars, Epoxy Coated			Pound	60

The above quantities include reinforcement for 2 scuppers.

NOTES

1. Cut b8(E) and b11(E) bars to clear drainage scuppers.
2. Space b3(E) thru b6(E) bars to avoid interference with drainage scuppers.

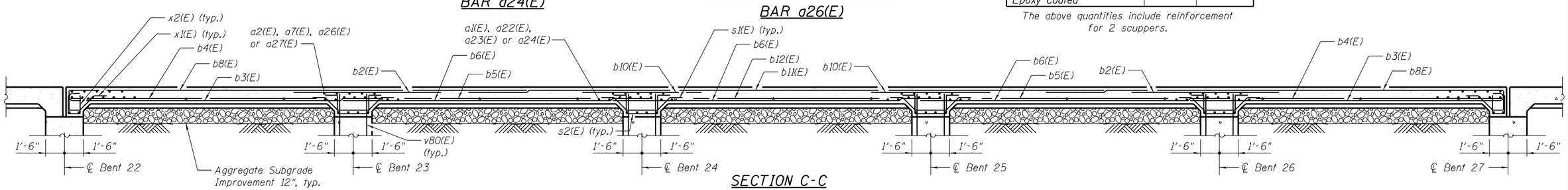

SECTION C-C

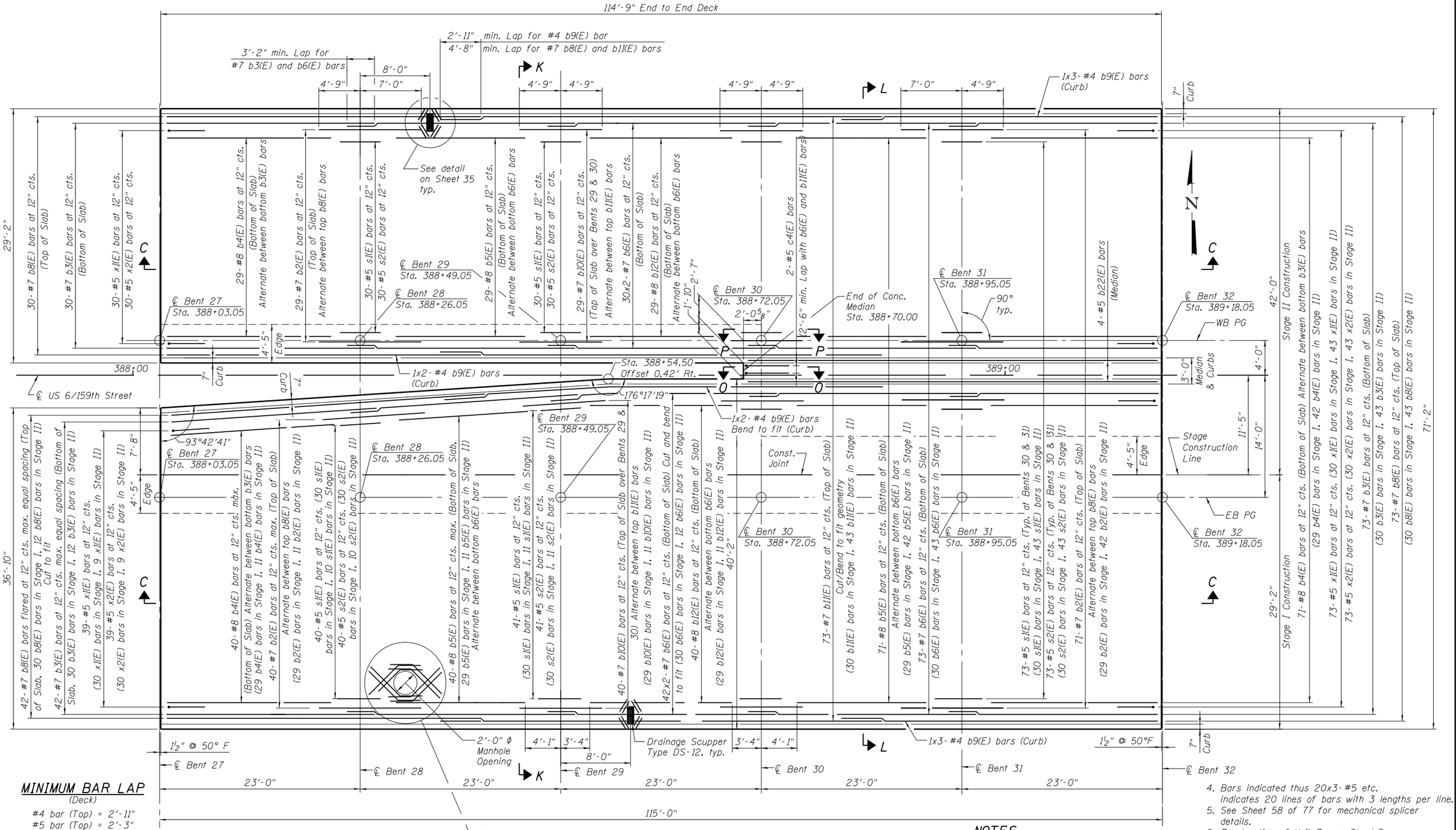

MINIMUM BAR LAP
(Deck)

#4 bar (Top) = 2'-11"
#5 bar (Top) = 2'-3"
#7 bar (Top) = 4'-8"
#7 bar = 3'-2"

PLAN
Unit 7

NOTES

1. Work this sheet with Sheet 34.
2. For Sections C-C, O-O and P-P, see Sheet 35 of 77.
3. See Sheet 35 of 77 for superstructure details and Bill of Material.
4. Bars indicated thus 20x3-#5 etc. indicates 20 lines of bars with 3 lengths per line.
5. See Sheet 58 of 77 for mechanical splicer details.
6. For location of Unit 7, see Sheet 2.
7. For Sections K-K and L-L see Sheet 42.
8. Cut b2(E), b5(E), b6(E) and b8(E) bars to clear 2'-0" ϕ manhole opening.
9. Contractor shall maintain a 2" minimum cover for the longitudinal rebar placed near the stage construction joint.

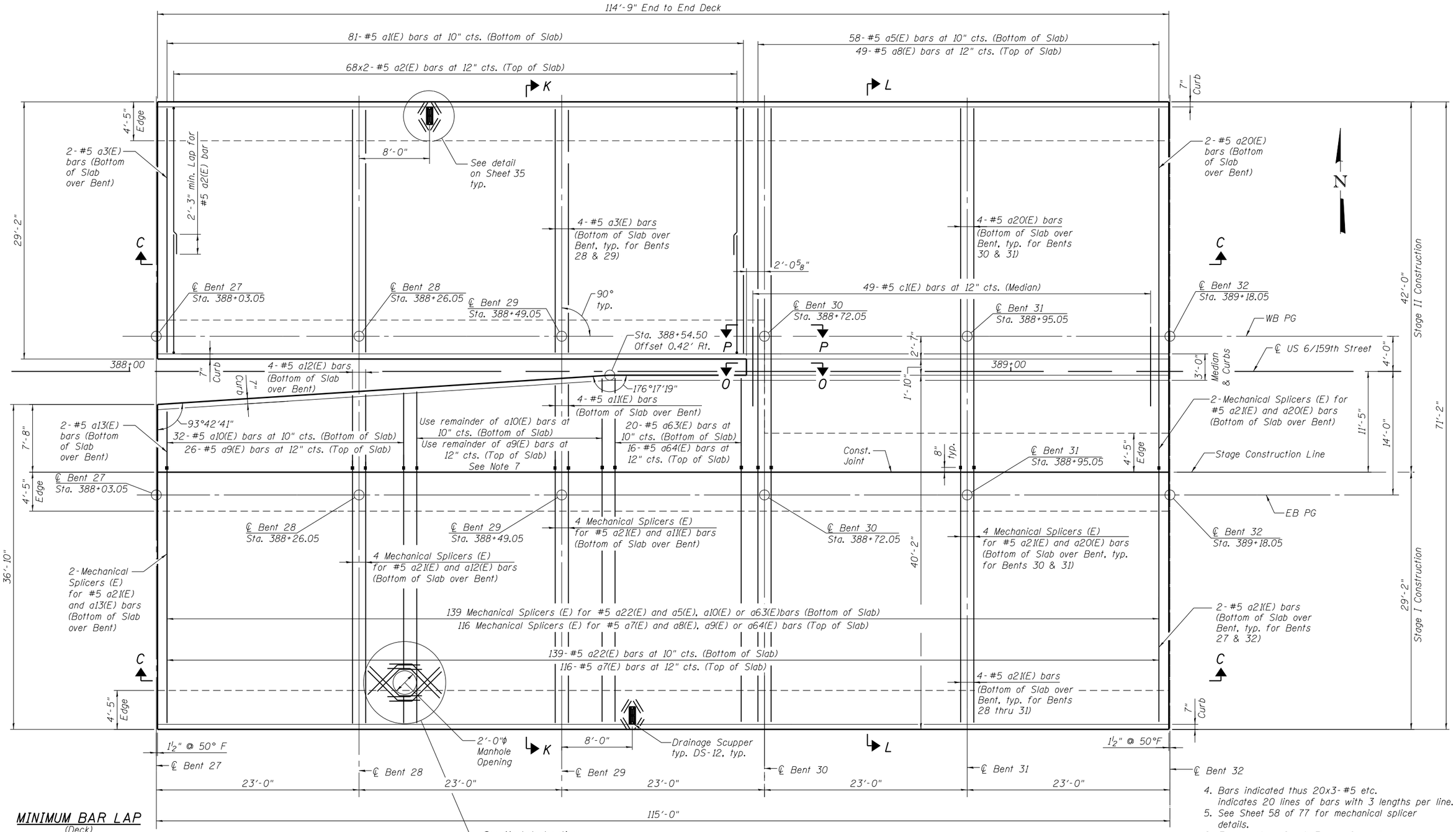

MINIMUM BAR LAP

(Deck)

#4 bar (Top) = 2'-11"
#5 bar (Top) = 2'-3"
#7 bar (Top) = 4'-8"
#7 bar = 3'-2"

PLAN

Unit 7

NOTES

1. Work this sheet with Sheet 33.
2. For Section C-C see Sheet 35 of 77.
3. See Sheet 35 of 77 for superstructure details and Bill of Material.
4. Bars indicated thus 20x3-#5 etc. indicates 20 lines of bars with 3 lengths per line.
5. See Sheet 58 of 77 for mechanical splicer details.
6. For location of Unit 7, see Sheet 2.
7. Order a9(E) and a10(E) bars full length. Cut to fit and use remainder of bars in adjacent area.
8. For Sections K-K and L-L see Sheet 42.
9. Cut a1(E) and a7(E) bars to clear 2'-0" ϕ manhole opening.

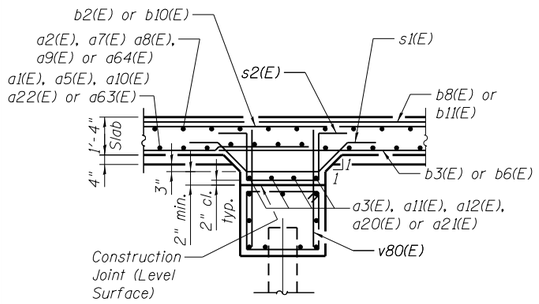

FIXED PILE BENT CAP SECTION

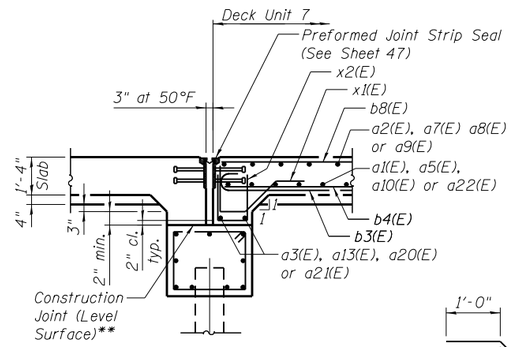

EXPANSION PILE BENT

** Top concrete surface of the expansion pier caps shall be finished to a very smooth finish. 1/8" neoprene sheet shall be placed on the entire top surface of the expansion pier caps prior to pouring the superstructure slab. Cost of furnishing and installing 1/8" neoprene sheet is included with CONCRETE STRUCTURES.

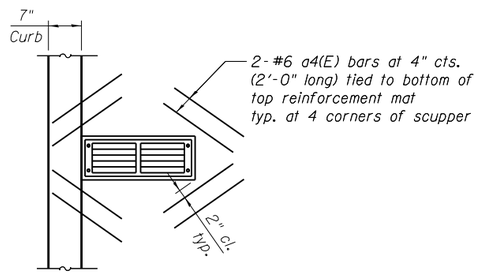

SCUPPER REINFORCEMENT

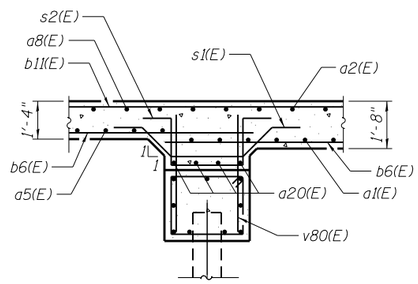

SECTION P-P

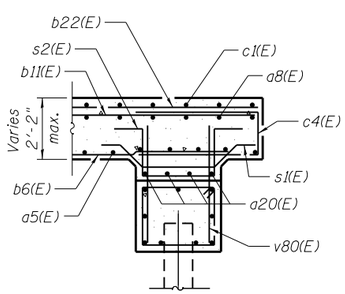

SECTION O-O

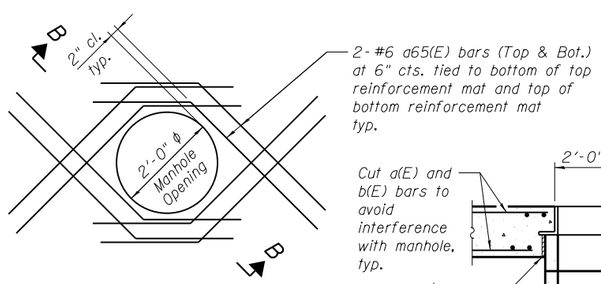

MANHOLE REINFORCEMENT

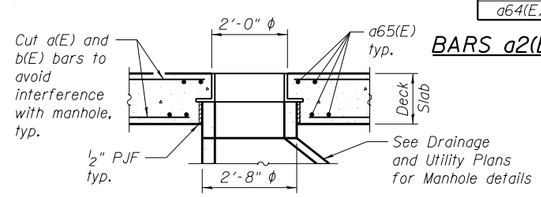

SECTION B-B

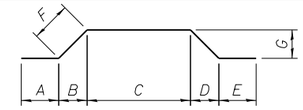

Bar	A	B	C	D	E	F	G
a1(E)	4'-1"	4"	20'-0"	4"	4'-1"	6"	4"
a5(E)	4'-1"	4"	32'-10"	4"	3'-7"	6"	4"
a22(E)	4'-11"	4"	20'-0"	4"	4'-1"	6"	4"
c1(E)	1'-0"	1"	2'-6"	1"	1'-0"	1'-6"	1'-6"

BARS a1(E), a5(E) & c1(E)

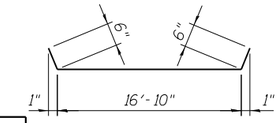

BAR a9(E)

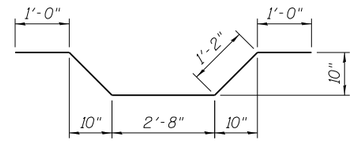

BAR s1(E)

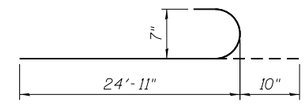

BAR b3(E)

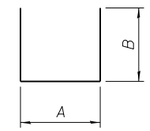

Bar	A	B
c4(E)	1'-3"	2'-11"
x2(E)	1'-0"	1'-9"

BARS c4(E) & x2(E)

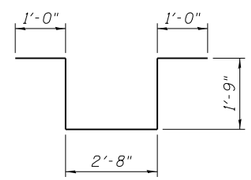

BAR s2(E)

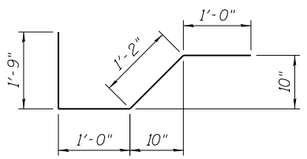

BAR x1(E)

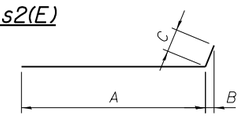

Bar	A	B	C
a2(E)	15'-7"	1"	6"
a7(E)	29'-7"	1"	6"
a8(E)	41'-1"	1"	2"
a64(E)	10'-1"	1"	6"

BARS a2(E), a7(E), a8(E) & a64(E)

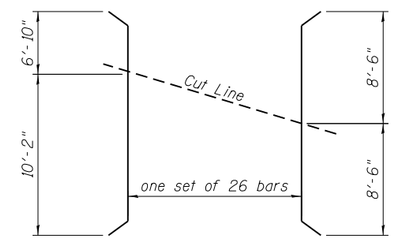

BAR a9(E)

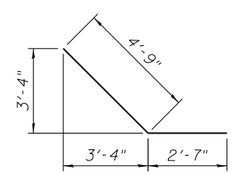

BAR a65(E)

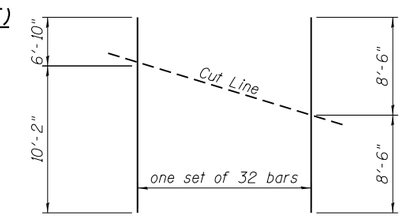

BAR a10(E)

BILL OF MATERIAL FOR UNIT 7

Bar	No.	Size	Length	Shape
a1(E)	81	#5	29'-2"	
a2(E)	136	#5	16'-1"	
a3(E)	10	#5	28'-10"	
a5(E)	58	#5	41'-6"	
a7(E)	116	#5	30'-1"	
a8(E)	49	#5	41'-3"	
a9(E)	26	#5	17'-10"	
a10(E)	32	#5	17'-0"	
a11(E)	4	#5	9'-9"	
a12(E)	4	#5	8'-3"	
a13(E)	2	#5	6'-10"	
a20(E)	10	#5	41'-2"	
a21(E)	20	#5	29'-8"	
a22(E)	139	#5	30'-0"	
a63(E)	20	#5	10'-2"	
a64(E)	16	#5	10'-7"	
a65(E)	16	#6	7'-4"	
b2(E)	140	#7	11'-9"	
b3(E)	145	#7	25'-9"	
b4(E)	140	#8	20'-1"	
b5(E)	140	#8	14'-10"	
b6(E)	217	#7	26'-2"	
b8(E)	145	#7	37'-2"	
b9(E)	10	#4	40'-4"	
b10(E)	138	#7	9'-6"	
b11(E)	73	#7	50'-8"	
b12(E)	69	#8	16'-4"	
b22(E)	4	#5	47'-7"	
c1(E)	49	#5	7'-6"	
c4(E)	2	#5	7'-1"	
s1(E)	287	#5	7'-0"	
s2(E)	287	#5	8'-2"	
x1(E)	142	#5	4'-11"	
x2(E)	142	#5	4'-6"	
Reinforcement Bars, Epoxy Coated			Pound	87,130
Concrete Superstructure			Cu. Yd.	479.3
Protective Coat			Sq. Yd.	902
Bridge Deck Grooving			Sq. Yd.	820

SCUPPER REINFORCEMENT BILL OF MATERIAL FOR SCUPPERS

Bar	No.	Size	Length	Shape
a4(E)	16	#6	2'-0"	
Reinforcement Bars, Epoxy Coated			Pound	60

The above quantities include reinforcement for 2 scuppers.

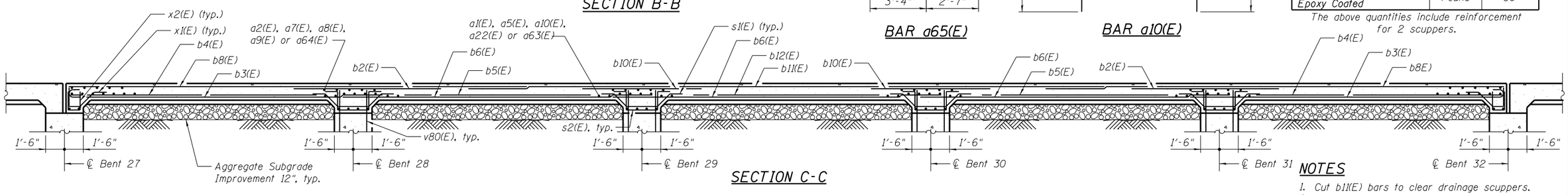

SECTION C-C

NOTES

1. Cut b11(E) bars to clear drainage scuppers.
2. Space b3(E) thru b6(E) bars to avoid interference with drainage scuppers.

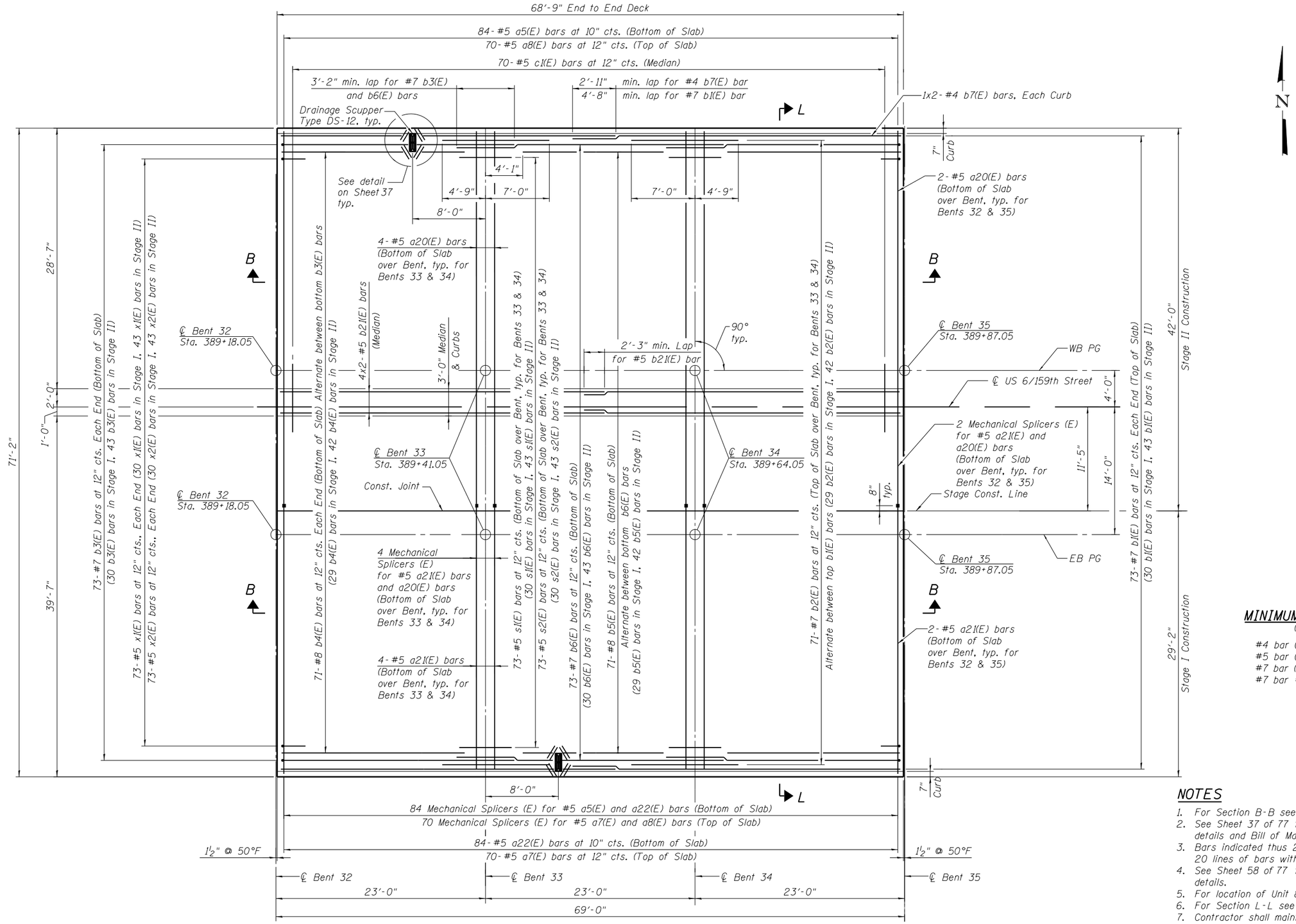

MINIMUM BAR LAP

(Deck)

#4 bar (Top) = 2'-11"
#5 bar (Top) = 2'-3"
#7 bar (Top) = 4'-8"
#7 bar = 3'-2"

NOTES

1. For Section B-B see Sheet 37 of 77.
2. See Sheet 37 of 77 for superstructure details and Bill of Material.
3. Bars indicated thus 20x3-#5 etc. indicates 20 lines of bars with 3 lengths per line.
4. See Sheet 58 of 77 for mechanical splicer details.
5. For location of Unit 8, see Sheet 2.
6. For Section L-L see Sheet 42.
7. Contractor shall maintain a 2" minimum cover for the longitudinal rebar placed near the stage construction joint.

PLAN

Unit 8

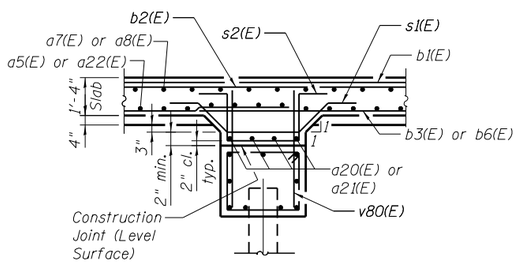

FIXED PILE BENT CAP SECTION

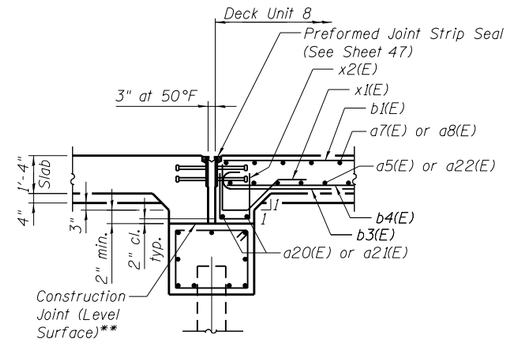

EXPANSION PILE BENT

** Top concrete surface of the expansion pier caps shall be finished to a very smooth finish. 1/8" neoprene sheet shall be placed on the entire top surface of the expansion pier caps prior to pouring the superstructure slab. Cost of furnishing and installing 1/8" neoprene sheet is included with CONCRETE STRUCTURES.

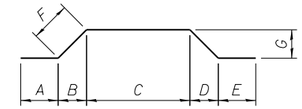

Bar	A	B	C	D	E	F	G
a5(E)	4'-1"	4"	32'-10"	4"	3'-7"	6"	4"
a22(E)	4'-11"	4"	20'-0"	4"	4'-1"	6"	4"
c1(E)	1'-0"	1"	2'-6"	1"	1'-0"	1'-6"	1'-6"

BARS a5(E), a22(E) & c1(E)

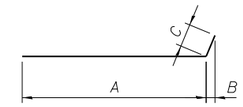

Bar	A	B	C
a7(E)	29'-7"	1"	6"
a8(E)	41'-1"	1"	2"

BARS a7(E) & a8(E)

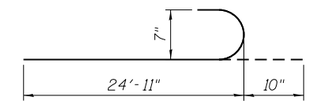

BAR b3(E)

BILL OF MATERIAL FOR UNIT 8

Bar	No.	Size	Length	Shape
a5(E)	84	#5	41'-6"	
a7(E)	70	#5	30'-1"	
a8(E)	70	#5	41'-3"	
a20(E)	12	#5	41'-2"	
a21(E)	12	#5	29'-8"	
a22(E)	84	#5	30'-0"	
b1(E)	146	#7	36'-11"	
b2(E)	142	#7	11'-9"	
b3(E)	146	#7	25'-9"	
b4(E)	142	#8	20'-1"	
b5(E)	71	#8	14'-10"	
b6(E)	73	#7	26'-2"	
b7(E)	4	#4	36'-1"	
b21(E)	8	#5	35'-4"	
c1(E)	70	#5	7'-6"	
s1(E)	146	#5	7'-0"	
s2(E)	146	#5	8'-2"	
x1(E)	146	#5	4'-11"	
x2(E)	146	#5	4'-6"	
Reinforcement Bars, Epoxy Coated			Pound	53,490
Concrete Superstructure			Cu. Yd.	290.3
Protective Coat			Sq. Yd.	558
Bridge Deck Grooving			Sq. Yd.	482

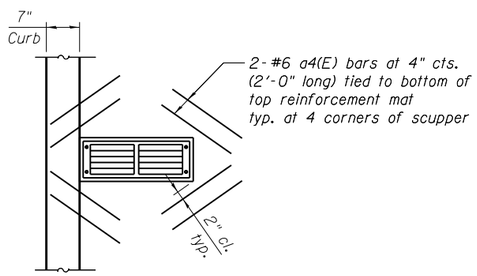

SCUPPER REINFORCEMENT

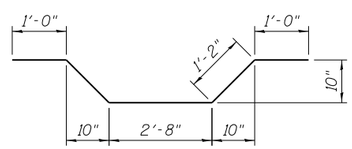

BAR s1(E)

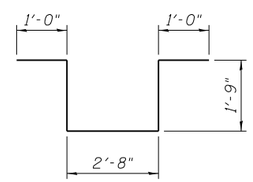

BAR s2(E)

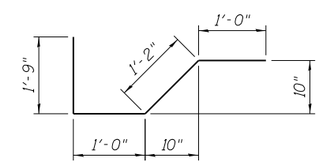

BAR x1(E)

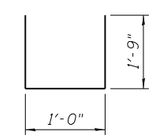

BAR x2(E)

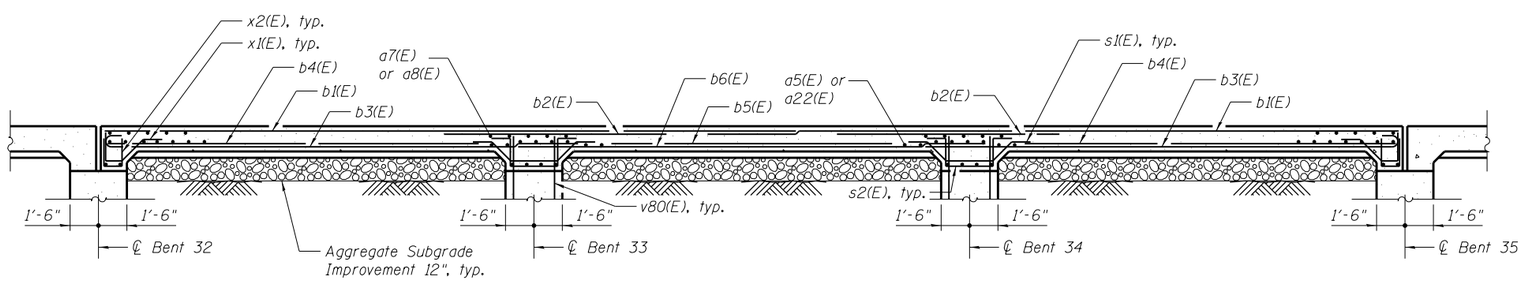

SECTION B-B

SCUPPER REINFORCEMENT BILL OF MATERIAL FOR SCUPPERS

Bar	No.	Size	Length	Shape
a4(E)	16	#6	2'-0"	
Reinforcement Bars, Epoxy Coated			Pound	60

The above quantities include reinforcement for 2 scuppers.

NOTES

1. Cut b1(E) bars to clear drainage scuppers.
2. Space b3(E) thru b6(E) bars to avoid interference with drainage scuppers.

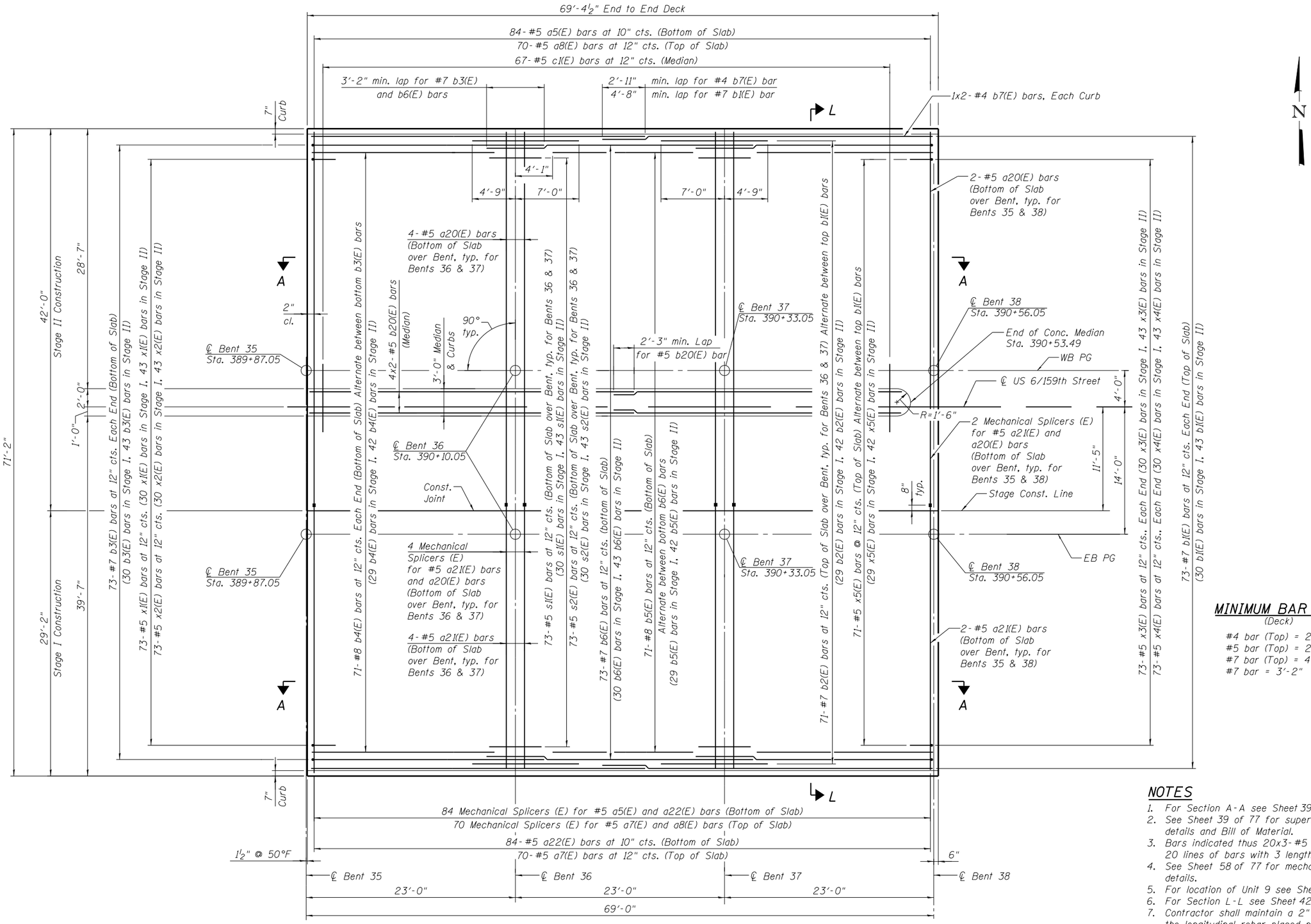

PLAN
Unit 9

MINIMUM BAR LAP
(Deck)

#4 bar (Top) = 2'-11"
#5 bar (Top) = 2'-3"
#7 bar (Top) = 4'-8"
#7 bar = 3'-2"

NOTES

1. For Section A-A see Sheet 39 of 77.
2. See Sheet 39 of 77 for superstructure details and Bill of Material.
3. Bars indicated thus 20x3- #5 etc. indicates 20 lines of bars with 3 lengths per line.
4. See Sheet 58 of 77 for mechanical splicer details.
5. For location of Unit 9 see Sheet 2.
6. For Section L-L see Sheet 42.
7. Contractor shall maintain a 2" minimum cover for the longitudinal rebar placed near the stage construction joint.

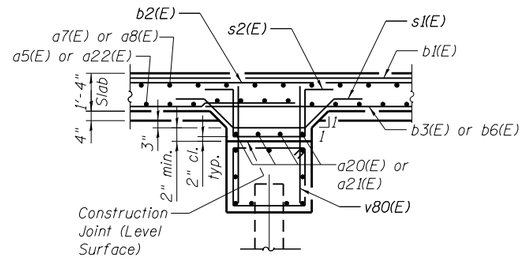

FIXED PILE BENT CAP SECTION

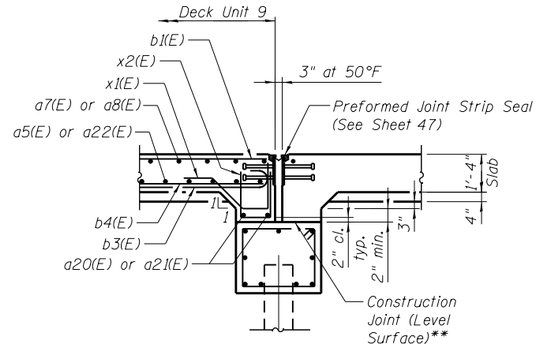

EXPANSION PILE BENT 35

** Top concrete surface of the expansion pier caps shall be finished to a very smooth finish. 1/8" neoprene sheet shall be placed on the entire top surface of the expansion pier caps prior to pouring the superstructure slab. Cost of furnishing and installing 1/8" neoprene sheet is included with CONCRETE STRUCTURES.

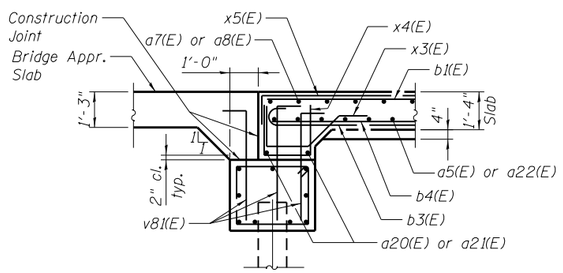

END PILE BENT 38 CAP SECTION

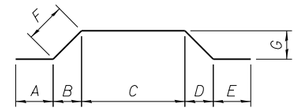

Bar	A	B	C	D	E	F	G
a5(E)	4'-1"	4"	32'-10"	4"	3'-7"	6"	4"
a22(E)	4'-11"	4"	20'-0"	4"	4'-1"	6"	4"
c1(E)	1'-0"	1"	2'-6"	1"	1'-0"	1'-6"	1'-6"

BARS a5(E), a22(E) & c1(E)

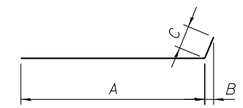

Bar	A	B	C
a7(E)	29'-7"	1"	6"
a8(E)	41'-1"	1"	2"

BARS a7(E) & a8(E)

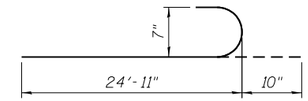

BAR b3(E)

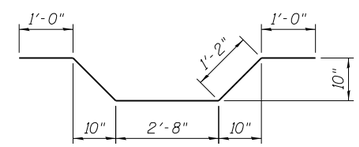

BAR s1(E)

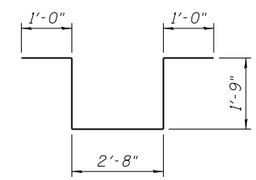

BAR s2(E)

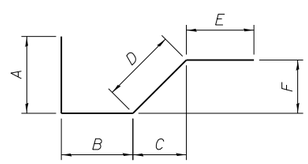

Bar	A	B	C	D	E	F
x1(E)	1'-9"	1'-0"	10"	1'-2"	1'-0"	10"
x3(E)	1'-9"	1'-8"	10"	1'-2"	1'-0"	10"

BARS x1(E) & x3(E)

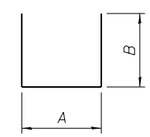

Bar	A	B
x2(E)	1'-0"	1'-9"
x4(E)	1'-8"	1'-9"

BARS x2(E) & x4(E)

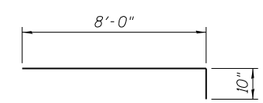

BAR x5(E)

BILL OF MATERIAL FOR UNIT 9

Bar	No.	Size	Length	Shape
a5(E)	84	#5	41'-6"	
a7(E)	70	#5	30'-1"	
a8(E)	70	#5	41'-3"	
a20(E)	12	#5	41'-2"	
a21(E)	12	#5	29'-8"	
a22(E)	84	#5	30'-0"	
b1(E)	146	#7	36'-11"	
b2(E)	142	#7	11'-9"	
b3(E)	146	#7	25'-9"	
b4(E)	142	#8	20'-1"	
b5(E)	71	#8	14'-10"	
b6(E)	73	#7	26'-2"	
b7(E)	4	#4	36'-1"	
b20(E)	8	#5	34'-2"	
c1(E)	67	#5	7'-6"	
s1(E)	146	#5	7'-0"	
s2(E)	146	#5	8'-2"	
x1(E)	73	#5	4'-11"	
x2(E)	73	#5	4'-6"	
x3(E)	73	#5	5'-7"	
x4(E)	73	#5	5'-2"	
x5(E)	71	#5	8'-10"	
Reinforcement Bars, Epoxy Coated			Pound	54,210
Concrete Superstructure			Cu. Yd.	294.0
Protective Coat			Sq. Yd.	563
Bridge Deck Grooving			Sq. Yd.	486

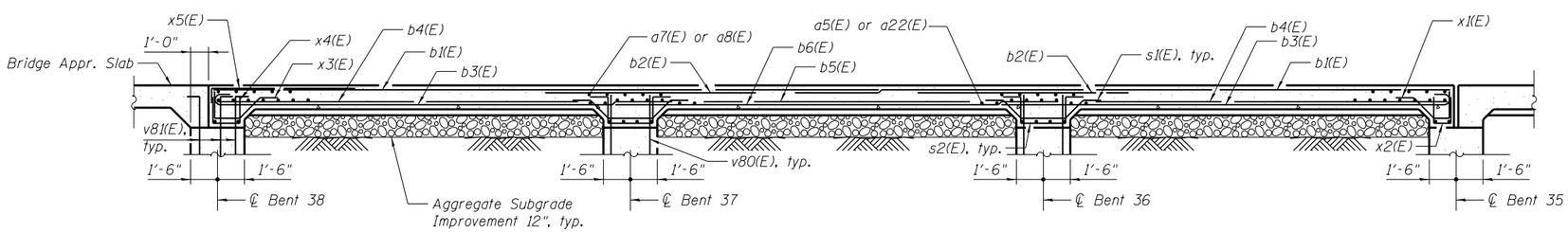

SECTION A-A

\\IWSCH1\Chicago2\5186-US61\Struct\dgn\Land Bridges\Land Bridge 2 - 016-D011\016D011-60L72-039-DP.dgn

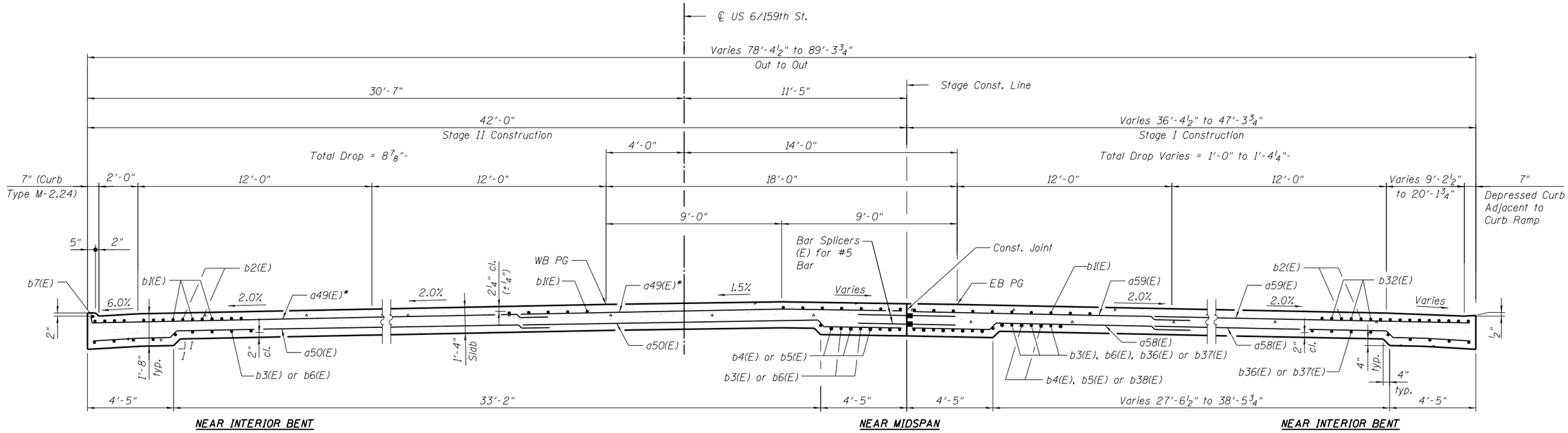

SECTION F-F - STATION 382+04.55 TO STATION 382+31.51

(Looking East)

*Tilt #5 a49(E) bars as required to maintain clearance

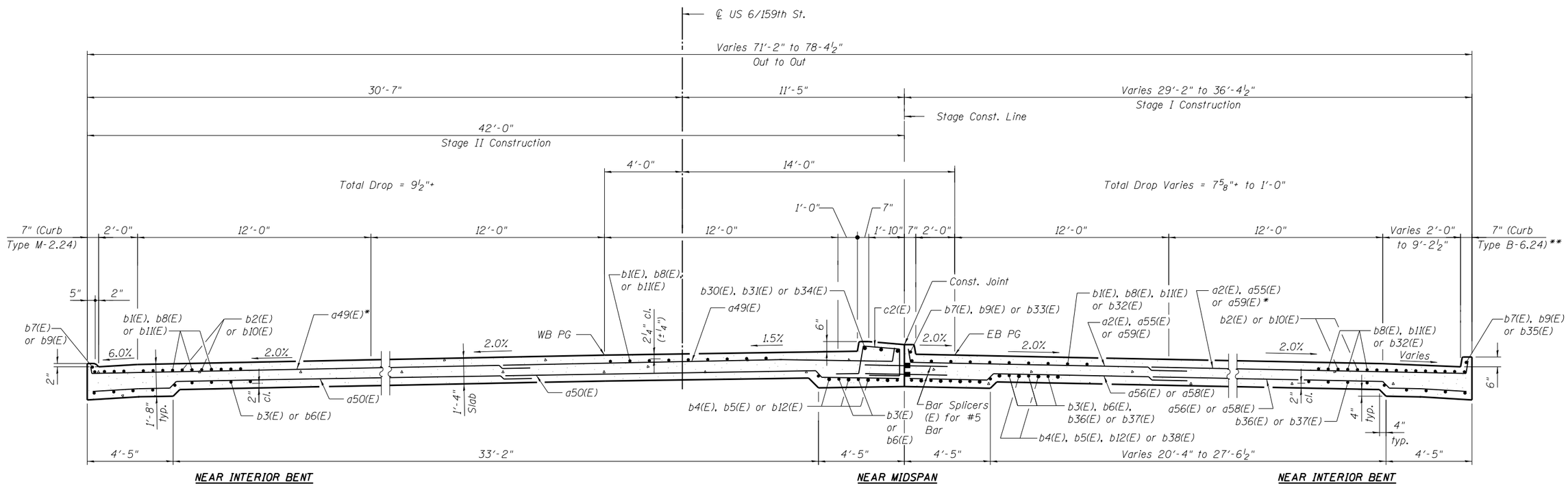

SECTION G-G - STATION 382+31.51 TO STATION 384+15.00

(Looking East)

* Tilt a49(E) and a59(E) bars as required to maintain clearance

** Use Depressed Curb ajacent to curb Ramp from Sta. 381+98.85 to Sta. 382+50.33. See SECTION F-F for details.

\\MASCH\Chicago2\5106-USS\Structs\dgn\Land Bridges\Land Bridge 2 - 016-D011\016D011-60L72-040-DP.dgn

LOCHNER H. W. LOCHNER, INC. 225 WEST WASHINGTON STREET 12 TH FLOOR CHICAGO, ILLINOIS 60606	USER NAME =	DESIGNED - LJB	REVISED	STATE OF ILLINOIS DEPARTMENT OF TRANSPORTATION	DECK CROSS SECTION 1 STRUCTURE NO. 016–D011	F.A.P. RTE.	SECTION	COUNTY	TOTAL SHEETS	SHEET NO.
	FILE NAME = 016D011-60L72-040-DP.dgn	CHECKED - RH	REVISED			351	2010-081-R	COOK	1045	465
	PLOT SCALE =	DRAWN - EF	REVISED					CONTRACT NO. 60L72		
	PLOT DATE =	CHECKED - RH	REVISED		SHEET NO. 40 OF 77 SHEETS			ILLINOIS FED. AID PROJECT		

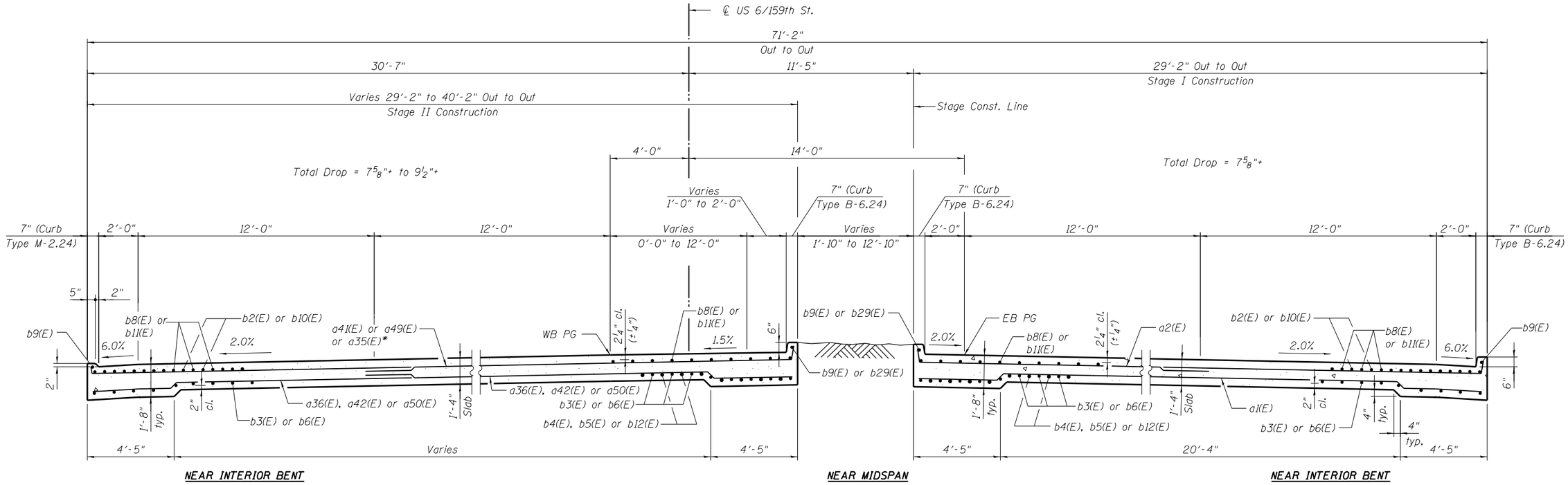

SECTION H-H - STATION 384+15.00 TO STATION 386+15.08

(Looking East)

*Tilt #5 a35(E) a41(E) or a49(E) bars as required to maintain clearance

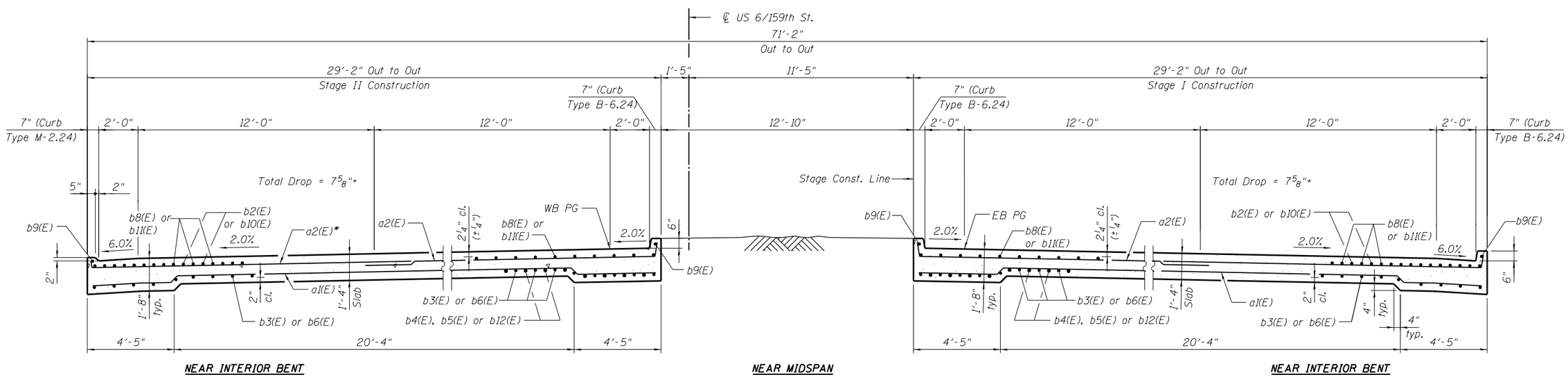

SECTION J-J - STATION 386+15.08 TO STATION 386+84.92

(Looking East)

*Tilt #5 a2(E) bars as required to maintain clearance

\\MSCH1\Chicago2\5186-USS\Struct\dgn\Land Bridges\Land Bridge 2 - 016-D011\016D011-60L72-041-DP.dgn

LOCHNER H. W. LOCHNER, INC. 225 WEST WASHINGTON STREET 12 TH FLOOR CHICAGO, ILLINOIS 60606	USER NAME =	DESIGNED - LJB	REVISED	**STATE OF ILLINOIS DEPARTMENT OF TRANSPORTATION**	**DECK CROSS SECTION 2 STRUCTURE NO. 016-D011**	F.A.P. RTE.	SECTION	COUNTY	TOTAL SHEETS / SHEET NO.
	FILE NAME = 016D011-60L72-041-DP.dgn	CHECKED - RH	REVISED			351	2010-081-R	COOK	1045 / 466
	PLOT SCALE =	DRAWN - EF	REVISED					CONTRACT NO. 60L72	
	PLOT DATE =	CHECKED - RH	REVISED		SHEET NO. 41 OF 77 SHEETS		ILLINOIS FED. AID PROJECT		

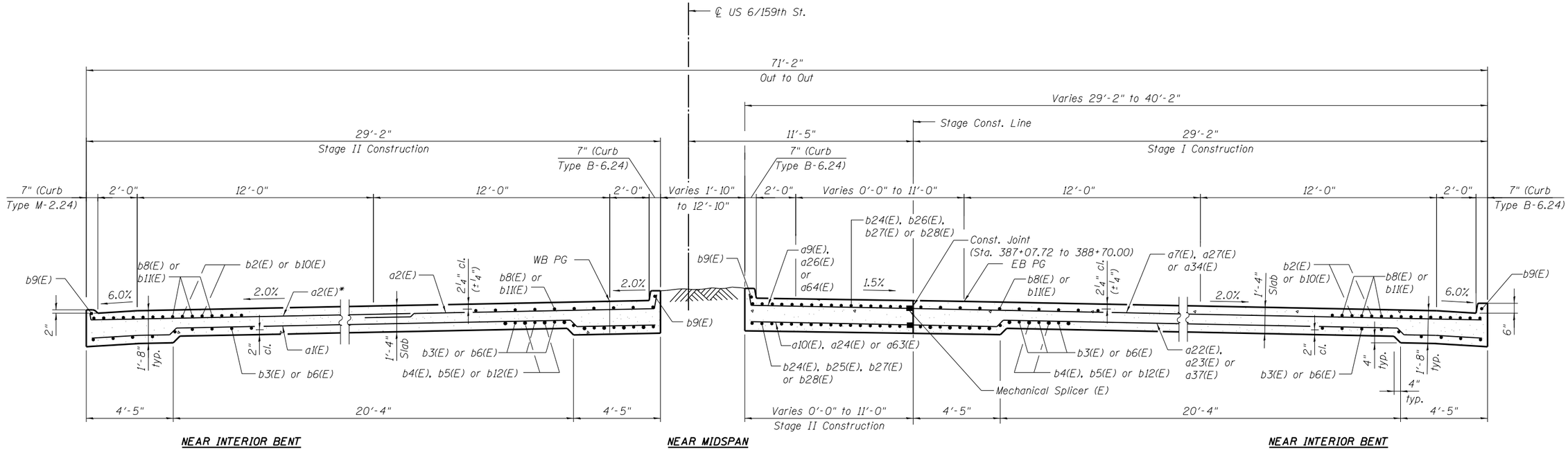

SECTION K-K - STATION 386+84.92 TO STATION 388+70.00

(Looking East)

*Tilt #5 a2(E) bars as required to maintain clearance

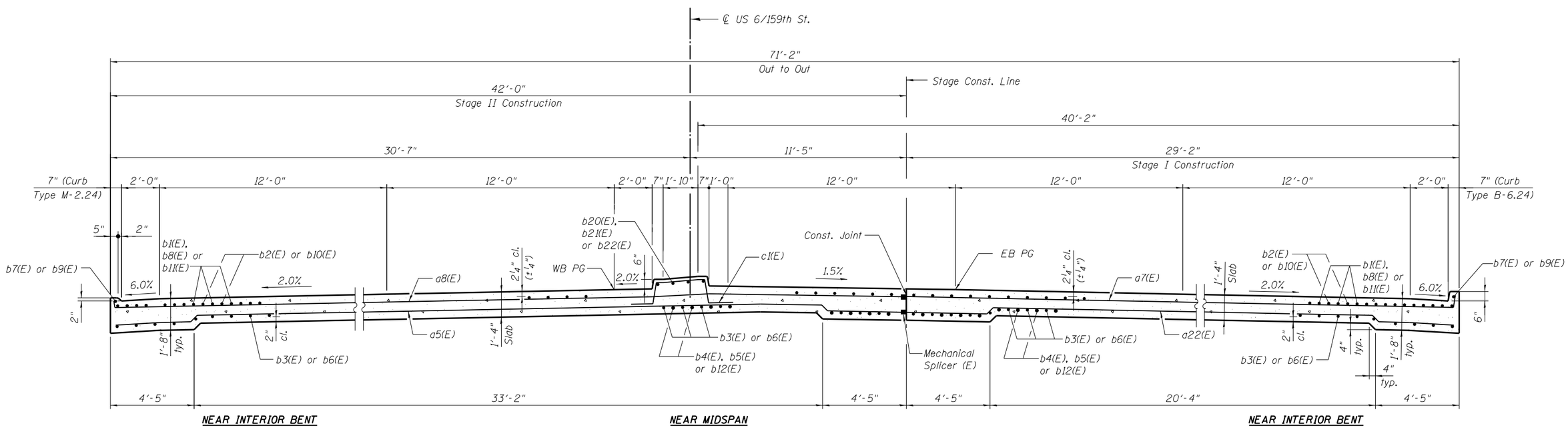

SECTION L-L - STATION 388+70.00 TO STATION 390+53.49

(Looking East)

\\MASCH\Chicago2\5106-USS\Struct\dgn\Land Bridges\Land Bridge 2 - 016-D011\016D011-60L72-042-DP.dgn

LOCHNER H. W. LOCHNER, INC. 225 WEST WASHINGTON STREET 12 TH FLOOR CHICAGO, ILLINOIS 60606	USER NAME =	DESIGNED - LJB	REVISED	**STATE OF ILLINOIS DEPARTMENT OF TRANSPORTATION**	**DECK CROSS SECTION 3 STRUCTURE NO. 016–D011**	F.A.P. RTE. 351	SECTION 2010-081-R
	FILE NAME = 016D011-60L72-042-DP.dgn	CHECKED - RH	REVISED			COUNTY COOK	TOTAL SHEETS 1045
	PLOT SCALE =	DRAWN - EF	REVISED			SHEET NO. 467	CONTRACT NO. 60L72
	PLOT DATE =	CHECKED - RH	REVISED		SHEET NO. 42 OF 77 SHEETS	ILLINOIS	FED. AID PROJECT

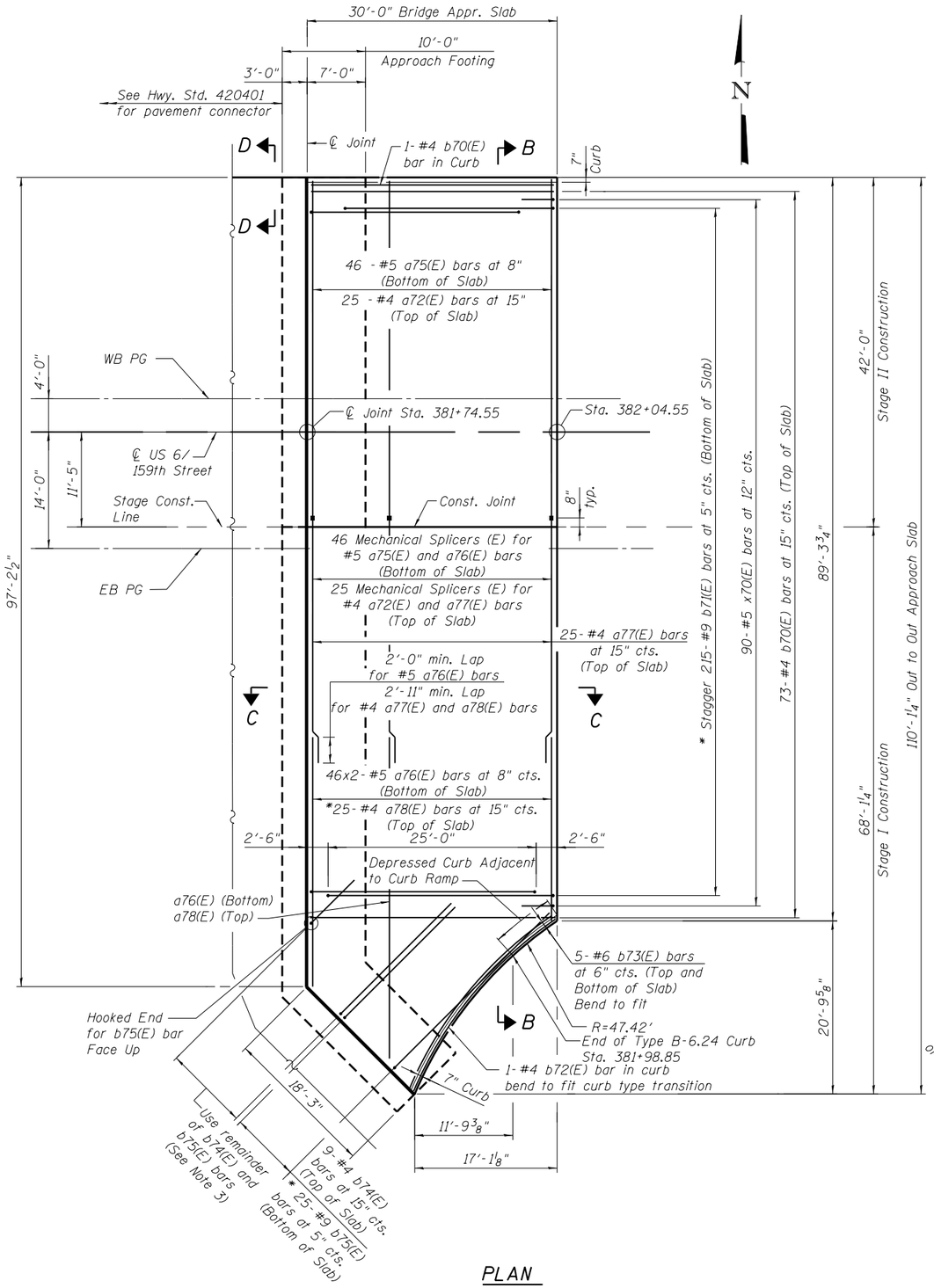

PLAN

* Tilt b71(E), b75(E) and a78(E) bars as required to maintain clearance.

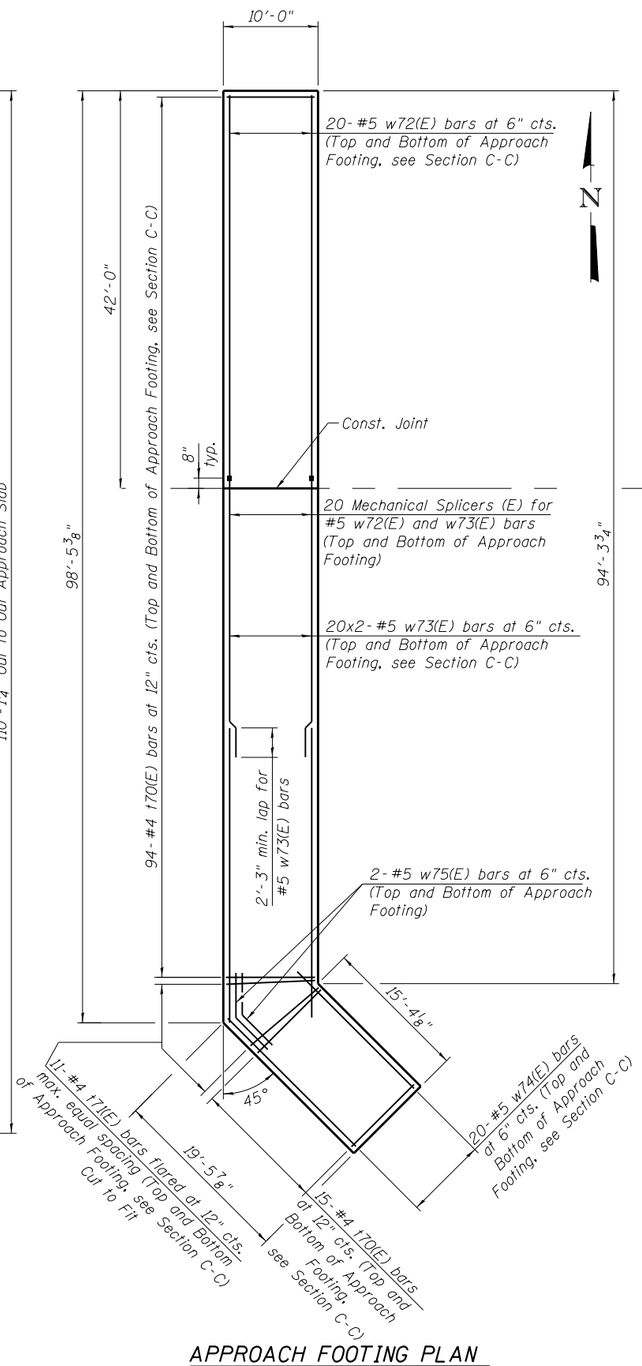

APPROACH FOOTING PLAN

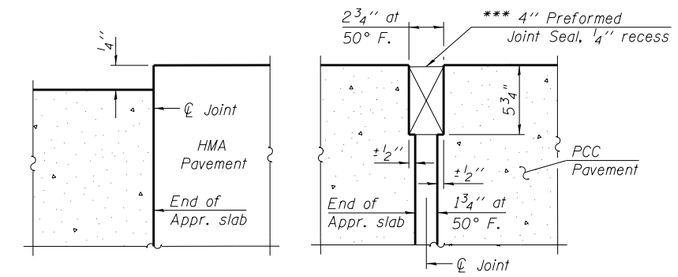

DETAIL A

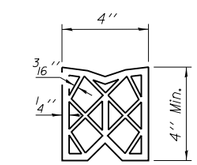

PREFORMED JOINT SEAL

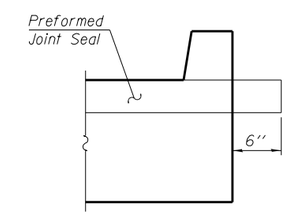

VIEW D-D

NOTES

1. See Sheet 44 of 77 for Sections B-B and C-C.
2. a72(E) and a75(E) thru a78(E) bar spacings measured along ℄ Rdwy.
3. Order b74(E) and b75(E) bars full length. Cut to fit and use remainder of bars in adjacent area.
4. For Field Cutting Diagram, see Sheet 44.
5. See Sheet 58 of 77 for mechanical splicer details.
6. The joint opening shall be determined per Article 520.04 except that on jointless structures, the distance described as the bridge length between the nearest fixed bearings each way from the joint shall be taken as half the bridge length plus the approach slab length. The minimum dimension shall be 1 1/2" for installation purposes.

\\MASCH\Chicago2\5186-USB\Struct\dgn\Land Bridges\Land Bridge 2 - 016-D011\016D011-60L72-043-AS.dgn

LOCHNER
H. W. LOCHNER, INC.
225 WEST WASHINGTON STREET
12 TH FLOOR
CHICAGO, ILLINOIS 60606

USER NAME =	DESIGNED - LJB	REVISED
FILE NAME = Ø16DØ11-60L72-043-AS.dgn	CHECKED - RH	REVISED
PLOT SCALE =	DRAWN - EF	REVISED
PLOT DATE =	CHECKED - RAB	REVISED

STATE OF ILLINOIS
DEPARTMENT OF TRANSPORTATION

WEST BRIDGE APPROACH SLAB DETAILS 1
STRUCTURE NO. 016–D011

SHEET NO. 43 OF 77 SHEETS

F.A.P. RTE.	SECTION	COUNTY	TOTAL SHEETS	SHEET NO.
351	2010-081-R	COOK	1045	468
		CONTRACT NO. 60L72		
		ILLINOIS FED. AID PROJECT		

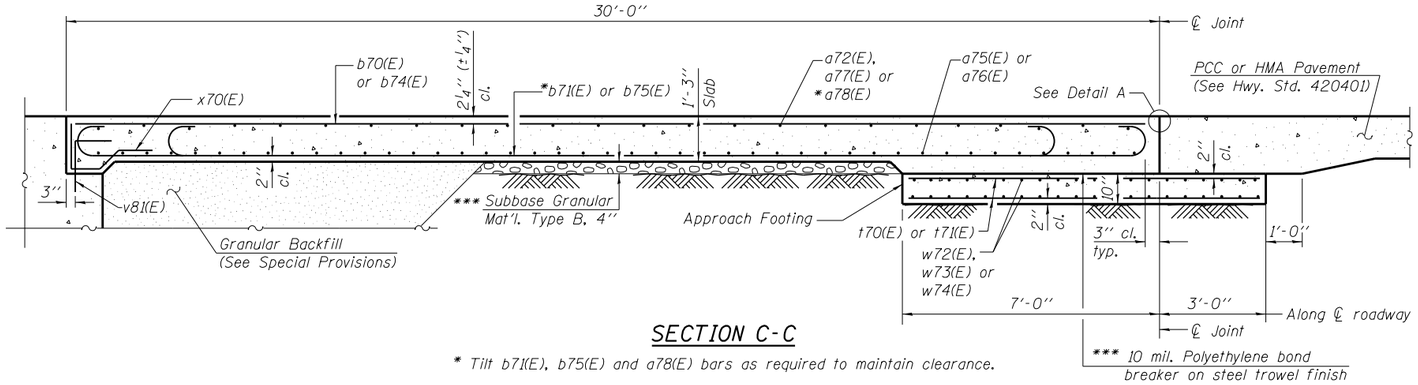

SECTION C-C

* Tilt b71(E), b75(E) and a78(E) bars as required to maintain clearance.

*** Cost included with Concrete Superstructure.

NOTES

1. See Sheet 43 of 77 for Detail A.
2. Approach slab shall be paid for as CONCRETE SUPERSTRUCTURE.
3. Approach footing concrete shall be paid for as CONCRETE STRUCTURES.
4. Reinforcement shall be paid for as REINFORCEMENT BARS, EPOXY COATED.
5. For v81(E) bar details, see Sheet 53 of 77.
6. The approach footing maximum applied service bearing pressure (Qmax) = 2.0 ksf.
7. Cost of excavation for approach footing included with CONCRETE STRUCTURES.
8. For Granular Backfill and drainage treatment details, see Sheet 3 of 77.

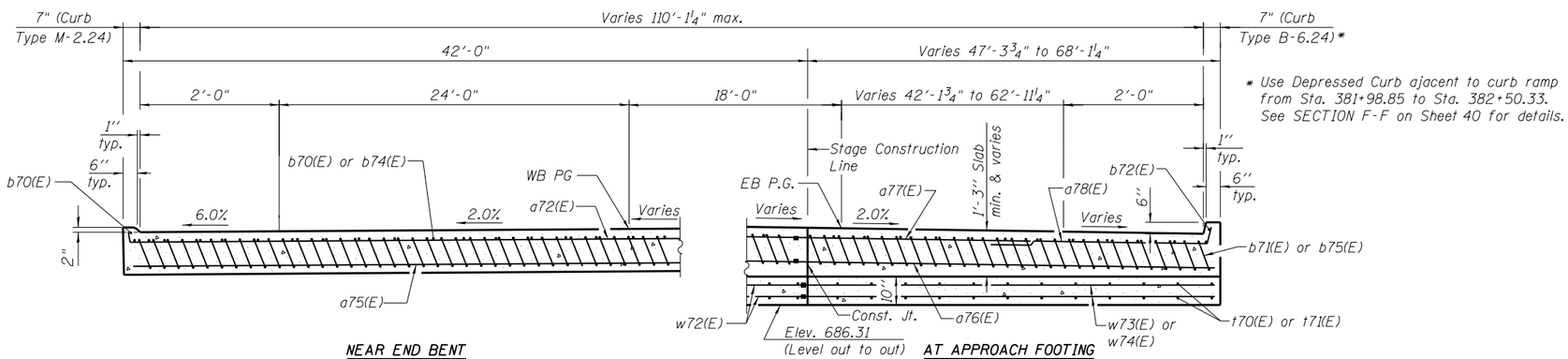

* Use Depressed Curb ajacent to curb ramp from Sta. 381+98.85 to Sta. 382+50.33. See SECTION F-F on Sheet 40 for details.

NEAR END BENT

AT APPROACH FOOTING

SECTION B-B

Looking East
(See Plan for dimensions not shown)

BILL OF MATERIAL FOR WEST APPROACH SLAB

Bar	No.	Size	Length	Shape
a72(E)	25	#4	41'-3"	
a75(E)	46	#5	41'-2"	
a76(E)	92	#5	35'-4"	
a77(E)	25	#4	30'-0"	
a78(E)	25	#4	39'-0"	
b70(E)	74	#4	29'-8"	
b71(E)	215	#9	29'-9"	
b72(E)	1	#4	20'-2"	
b73(E)	10	#6	27'-5"	
b74(E)	9	#4	34'-0"	
b75(E)	25	#9	36'-6"	
t70(E)	218	#4	9'-8"	
t71(E)	22	#4	10'-6"	
w72(E)	40	#5	41'-2"	
w73(E)	80	#5	29'-9"	
w74(E)	40	#5	19'-2"	
w75(E)	4	#5	6'-6"	
x70(E)	90	#5	5'-7"	
Reinforcement Bars, Epoxy Coated			Pound	41,270
Concrete Superstructure			Cu. Yd.	160.0
Concrete Structures			Cu. Yd.	35.2
Bridge Deck Grooving			Sq. Yd.	320
Protective Coat			Sq. Yd.	330

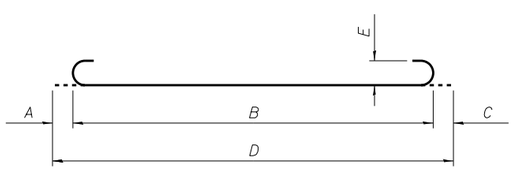

Bar	A	B	C	D	E
b71(E)	1'-3"	27'-3"	1'-3"	29'-9"	11¾"
b75(E)	1'-3"	34'-0"	1'-3"	36'-6"	11¾"

BARS b71(E) & b75(E)

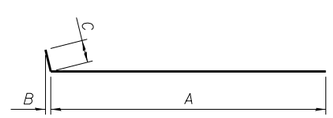

Bar	A	B	C
a72(E)	41'-1"	1"	2"
a78(E)	38'-6"	1"	6"

BARS a72(E) & a78(E)

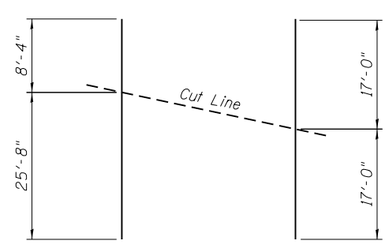

BAR b74(E)

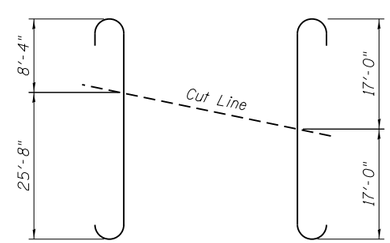

BAR b75(E)

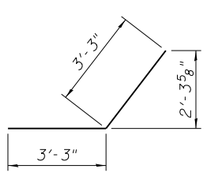

BAR w75(E)

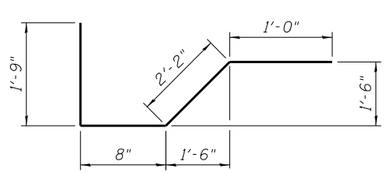

BAR x70(E)

\\MASCH1\Chicago2\5106-USB\Struct\dgn\Lend Bridges\Lend Bridge 2 - 016-D011\016D011-60L72-044-AS.dgn

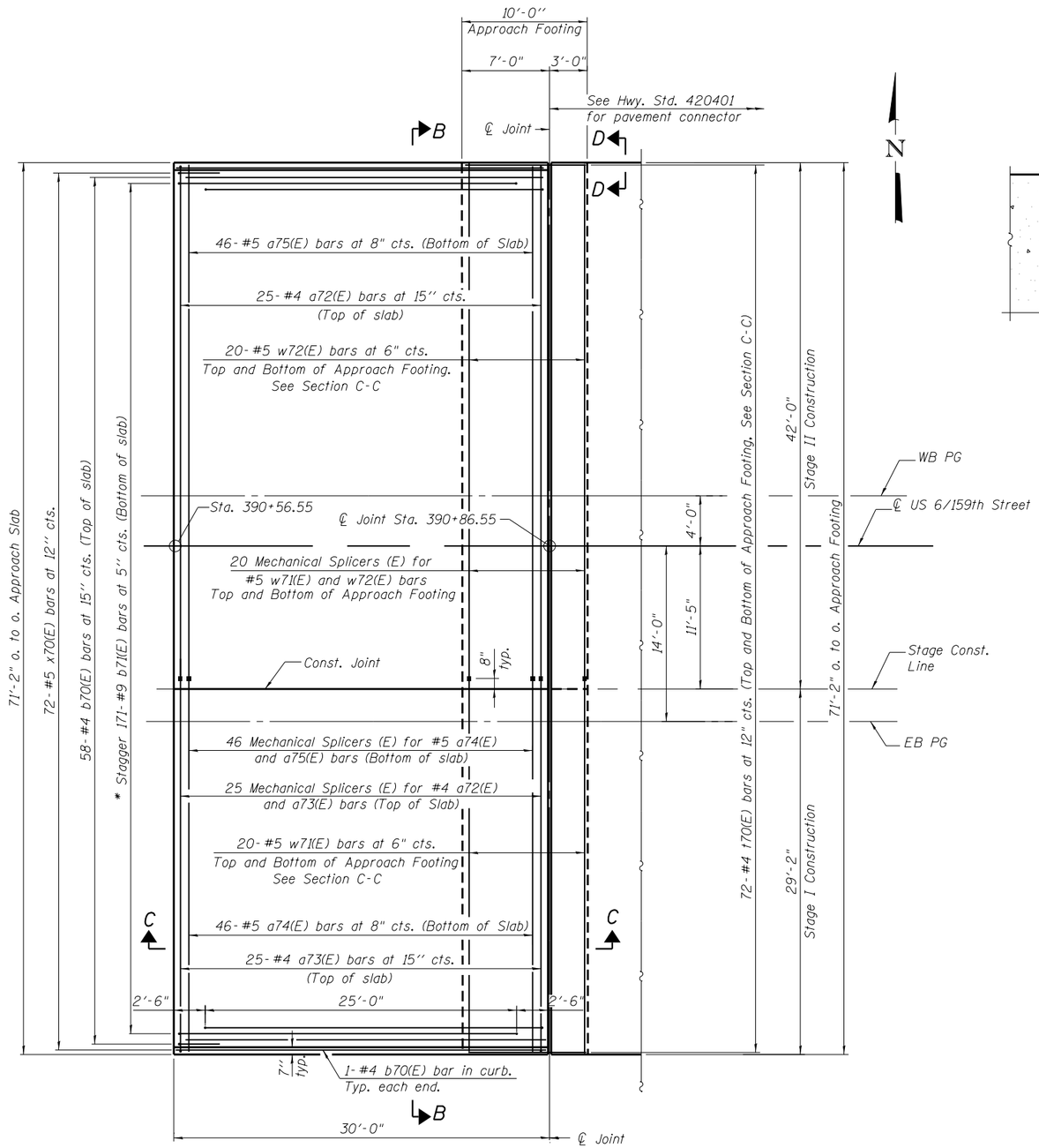

PLAN

* Tilt #9 b71(E) bars as required to maintain clearance.

*** Cost included with Concrete Superstructure.

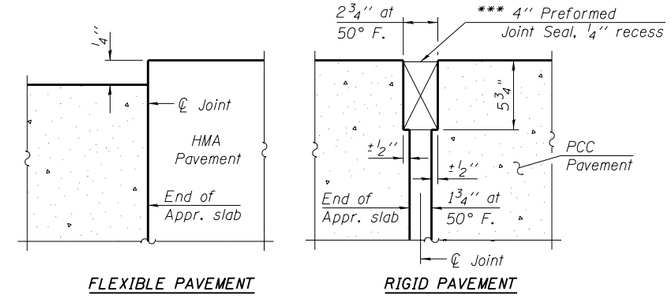

DETAIL A

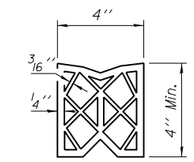

PREFORMED JOINT SEAL

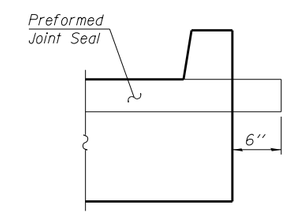

VIEW D-D

NOTES

1. See Sheet 46 of 77 for Sections B-B and C-C.
2. a72(E) thru a75(E) bar spacings measured along ℄ Rdwy.
3. See Sheet 58 of 77 for mechanical splicer details.
4. The joint opening shall be determined per Article 520.04 except that on jointless structures, the distance described as the bridge length between the nearest fixed bearings each way from the joint shall be taken as half the bridge length plus the approach slab length. The minimum dimension shall be 1 1/2" for installation purposes.

\\WASCH1\Chicago2\5186-USB\Struct\dgn\Land Bridges\Land Bridge 2 - 016-D011\016D011-60L72-045-AS.dgn

LOCHNER H. W. LOCHNER, INC. 225 WEST WASHINGTON STREET 12 TH FLOOR CHICAGO, ILLINOIS 60606	USER NAME =	DESIGNED - LJB	REVISED	STATE OF ILLINOIS DEPARTMENT OF TRANSPORTATION	EAST BRIDGE APPROACH SLAB DETAILS I STRUCTURE NO. 016-D011	F.A.P. RTE.	SECTION	COUNTY	TOTAL SHEETS	SHEET NO.
	FILE NAME = 016D011-60L72-045-AS.dgn	CHECKED - RH	REVISED			351	2010-081-R	COOK	1045	470
	PLOT SCALE =	DRAWN - EF	REVISED					CONTRACT NO. 60L72		
	PLOT DATE =	CHECKED - RAB	REVISED		SHEET NO. 45 OF 77 SHEETS		ILLINOIS FED. AID PROJECT			

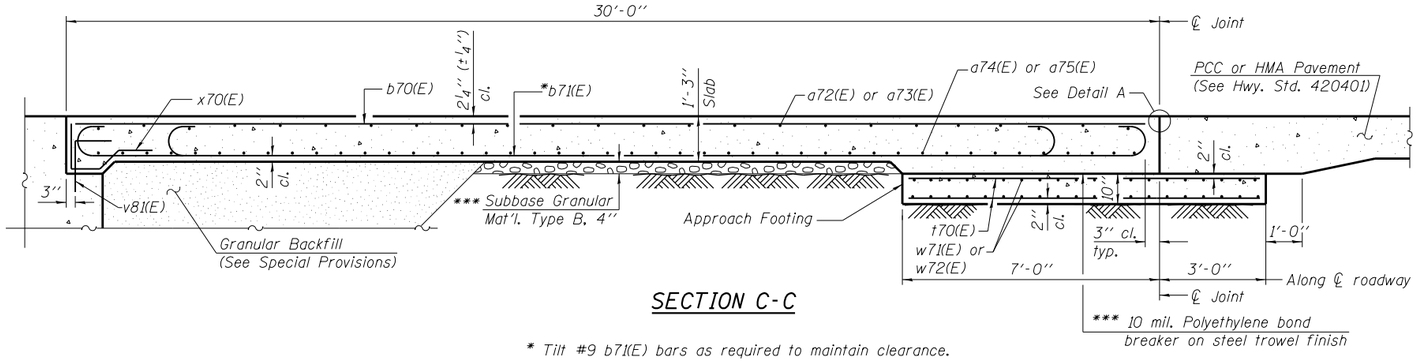

SECTION C-C

* Tilt #9 b71(E) bars as required to maintain clearance.

*** Cost included with Concrete Superstructure.

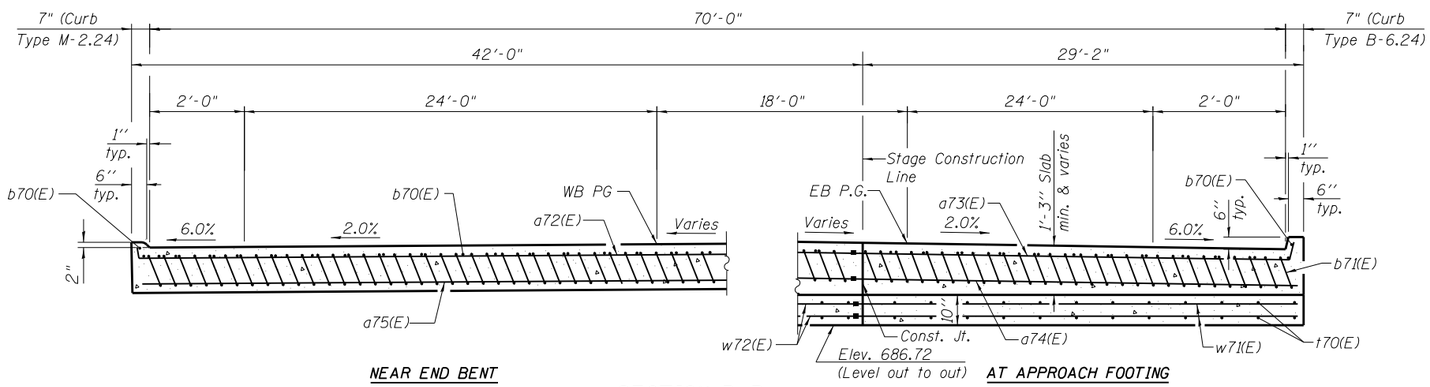

SECTION B-B

Looking East
(See Plan for dimensions not shown)

NOTES

1. See Sheet 45 of 77 for Detail A.
2. Approach slab shall be paid for as CONCRETE SUPERSTRUCTURE.
3. Approach footing concrete shall be paid for as CONCRETE STRUCTURES.
4. Reinforcement shall be paid for as REINFORCEMENT BARS, EPOXY COATED.
5. For v81(E) bar details, see Sheet 53 of 77.
6. The approach footing maximum applied service bearing pressure (Qmax) = 2.0 ksf.
7. Cost of excavation for approach footing included with CONCRETE STRUCTURES.
8. For Granular Backfill and drainage treatment details, see Sheet 3 of 77.

BILL OF MATERIAL FOR EAST APPROACH SLAB

Bar	No.	Size	Length	Shape
a72(E)	25	#4	41'-3"	
a73(E)	25	#4	30'-1"	
a74(E)	46	#5	29'-8"	
a75(E)	46	#5	41'-2"	
b70(E)	60	#4	29'-8"	
b71(E)	171	#9	29'-9"	
t70(E)	144	#4	9'-8"	
w71(E)	40	#5	29'-8"	
w72(E)	40	#5	41'-2"	
x70(E)	72	#5	5'-7"	
Reinforcement Bars, Epoxy Coated			Pound	27,390
Concrete Superstructure			Cu. Yd.	113.0
Concrete Structures			Cu. Yd.	22.0
Bridge Deck Grooving			Sq. Yd.	227
Protective Coat			Sq. Yd.	241

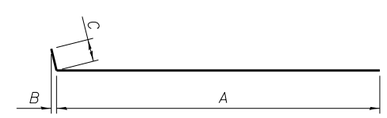

Bar	A	B	C
a72(E)	41'-1"	1"	2"
a73(E)	29'-7"	1"	6"

BARS a72(E) & a73(E)

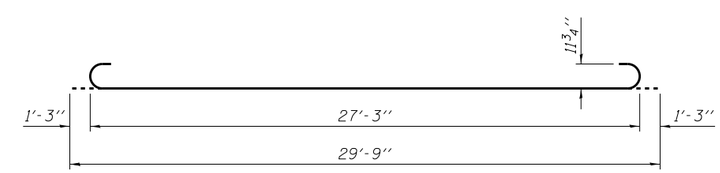

BAR b71(E)

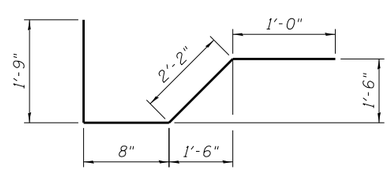

BAR x70(E)

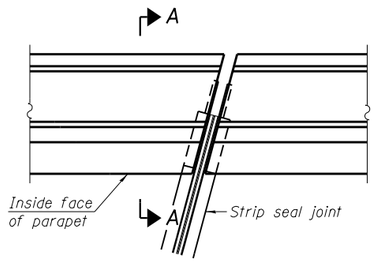

PLAN
(For skews ≤ 30°)

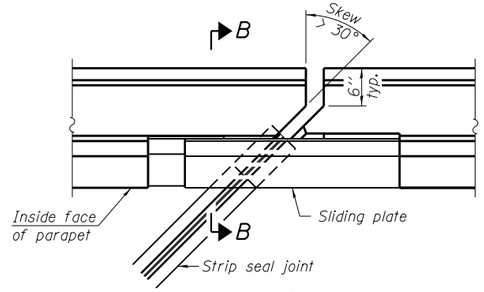

PLAN
(For skews > 30°)
Showing point block

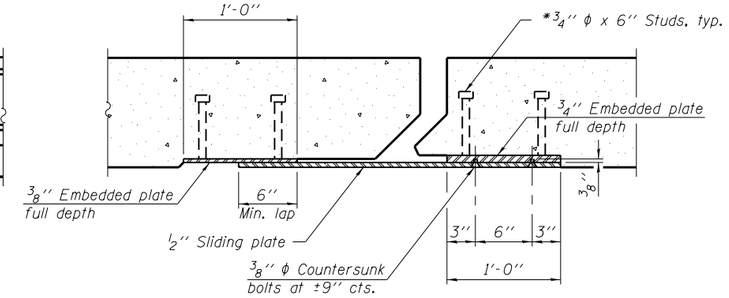

SECTION C-C

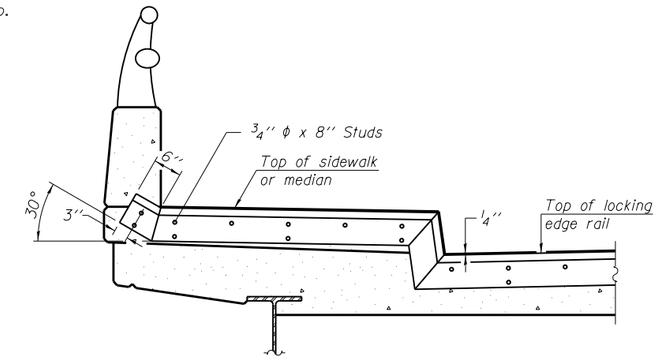

TYPICAL END TREATMENT AT SIDEWALK OR MEDIAN

Shorter plates with a single row of studs at 12'' cts. may be necessary on medians which are shallower than 9''. See manufacturer's recommendation.

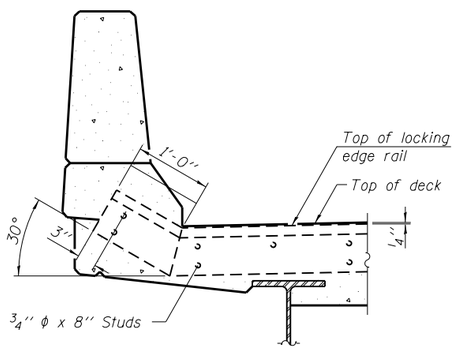

SECTION A-A

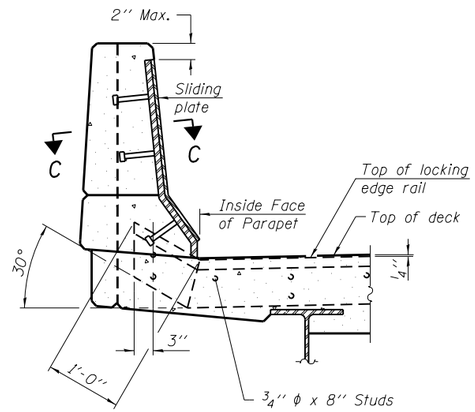

SECTION B-B

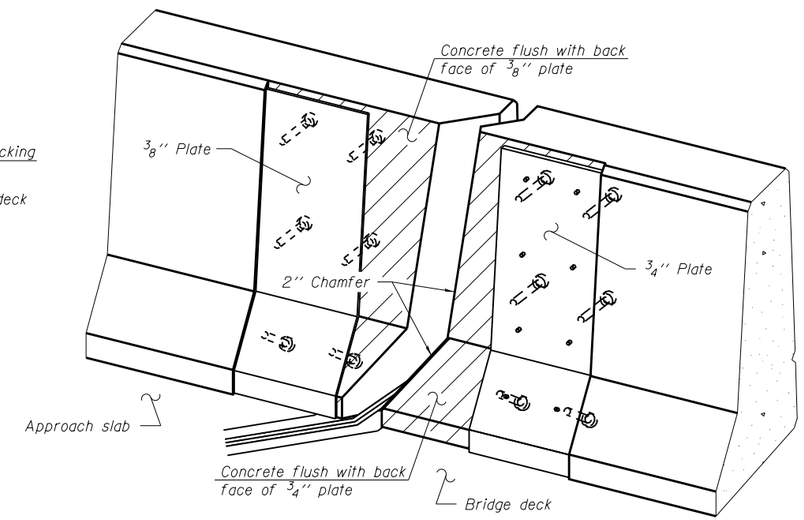

TRIMETRIC VIEW
(Showing back plates only)

Notes:

The strip seal shall be made continuous and shall have a minimum thickness of 1/4''. The configuration of the strip seal shall match the configuration of the Locking Edge Rails. Open or "webbed" strip seal gland configurations are not permitted. The gland shall be sized for a maximum rated movement of 4 inches.

The Locking Edge Rails depicted are conceptual only, except for the minimum dimensions shown. The actual configuration of the Locking Edge Rails and matching strip seal may vary from manufacturer to manufacturer. Flanged edge rails will not be allowed. Locking Edge Rails may be spliced at slope discontinuities.

The manufacturer's recommended installation methods shall be followed.

The joint opening and deck dimensions detailed on the superstructure are based on a rolled rail expansion joint. If the Contractor elects to use the welded rail expansion joint, the opening and deck dimensions shall be modified according to the dimensions detailed on this sheet. Required modifications shall be made at no additional cost to the State.

All steel components shall be galvanized after fabrication according to Article 520.03 of the Standard Specifications.

Maximum space between rail segments shall be 3/16'', sealed with a suitable sealant. Joints in rails within 10 ft. of curbs shall be welded.

Parapet plates and anchorage studs for skews > 30° included in the cost of Preformed Joint Strip Seal.

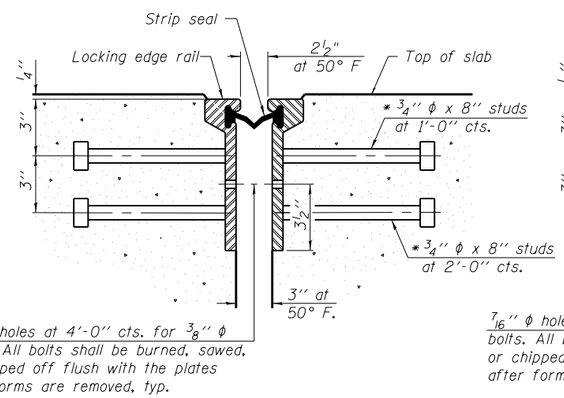

SECTION THRU
ROLLED RAIL JOINT

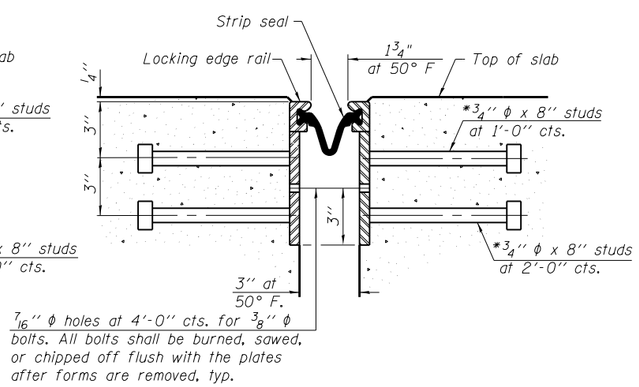

SECTION THRU
WELDED RAIL JOINT

* Granular or solid flux filled headed studs conforming to Article 1006.32 of the Std. Specs., automatically end welded.

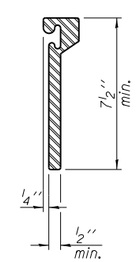

ROLLED
EXTRUDED RAIL

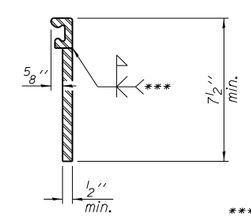

WELDED RAIL

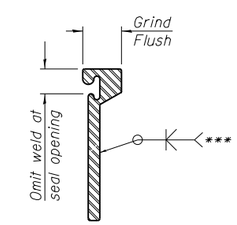

*** Back gouge not required if complete joint penetration is verified by mock-up.

LOCKING EDGE
RAIL SPLICE

The inside of the locking edge rail groove shall be free of weld residue.

Rolled rail shown, welded rail similar.

LOCKING EDGE RAILS

BILL OF MATERIAL

Item	Unit	Total
Preformed Joint Strip Seal	Foot	539

EJ-SSJ 1-27-12

\\MASCH1\Chicago2\5186-USS\Struct\dgn\Land Bridges\Land Bridge 2 - 016-D011\016D011-60L72-047-EJ.dgn

LOCHNER	USER NAME =	DESIGNED - LJB	REVISED	STATE OF ILLINOIS DEPARTMENT OF TRANSPORTATION	PREFORMED JOINT STRIP SEAL STRUCTURE NO. 016–D011	F.A.P. RTE.	SECTION	COUNTY	TOTAL SHEETS	SHEET NO.
H. W. LOCHNER, INC. 225 WEST WASHINGTON STREET 12 TH FLOOR CHICAGO, ILLINOIS 60606	FILE NAME = 016D011-60L72-047-EJ.dgn	CHECKED - RH	REVISED			351	2010-081-R	COOK	1045	472
	PLOT SCALE =	DRAWN - EF	REVISED					CONTRACT NO. 60L72		
	PLOT DATE =	CHECKED - RH	REVISED		SHEET NO. 47 OF 77 SHEETS		ILLINOIS FED. AID PROJECT			

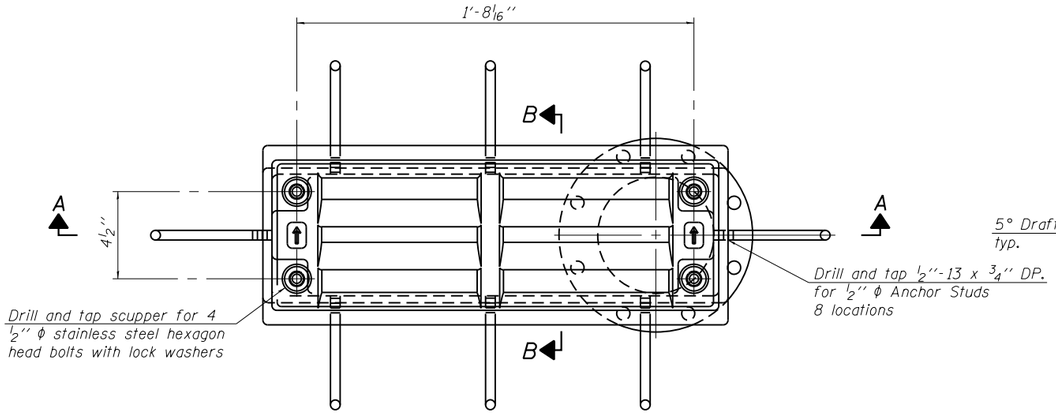

PLAN

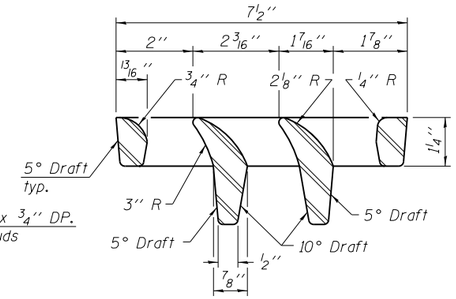

VANE GRATE DETAIL

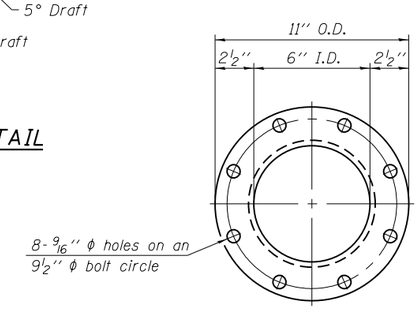

Notes:

All cast iron parts shall be gray iron conforming to the requirements of AASHTO M 105, Class 35B.

Bolts, anchor studs, washers and nuts shall conform to the requirements of ASTM A 307 and shall be galvanized according to AASHTO M 232.

Downspouts located on the exterior side of a painted steel fascia beam shall be painted with the finish coat specified for the exterior side of the fascia beam.

As an alternate, bolts, anchor studs, washers and nuts may be stainless steel according to Article 1006.29(d) of the Standard Specifications.

Structural steel weldments of equal sections and of the same configuration may be substituted for the cast iron scupper frame. Fillet or full penetration welds shall be used for the weldments. Details shall be submitted to the Engineer for approval. Structural steel weldments shall not be substituted for the cast iron scupper grate. Structural steel frames and downspouts shall be galvanized according to AASHTO M111.

The Contractor shall take appropriate measures to assure that Protective Coat is not applied to the scupper.

Cost of the Grate, Frame, Downspout, Anchor Studs, Bolts, Washers and Nuts including complete installation of the scupper shall be paid for at the contract unit price each for Drainage Scupper, DS-12.

Alternate fiberglass downspout conforming to ASTM D 2996 with a short-time rupture strength hoop tensile stress of 30,000 psi min. may be used in lieu of the cast iron or steel equivalent.

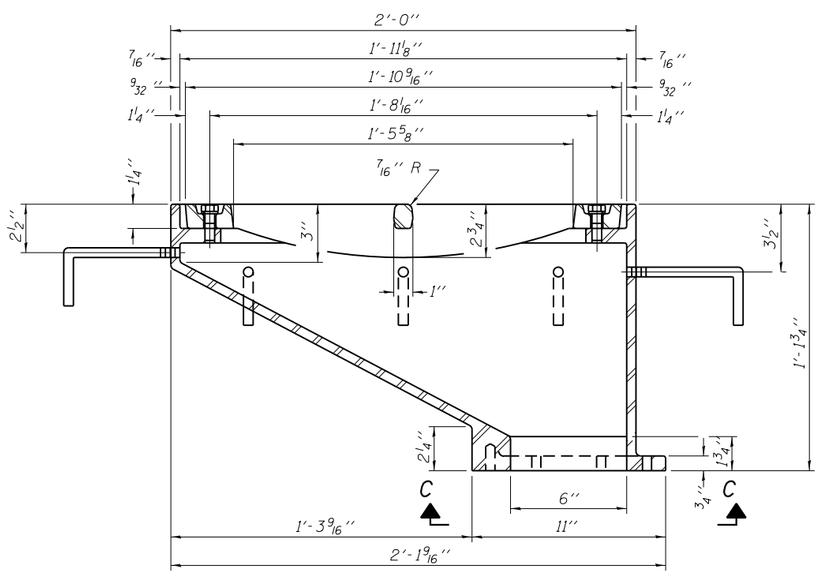

SECTION A-A

See sheets 22, 24, 26, 28, 32, 35 and 37 of 77 for scupper location relative to curb.

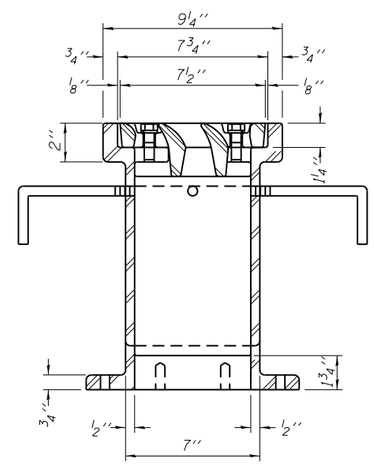

SECTION B-B

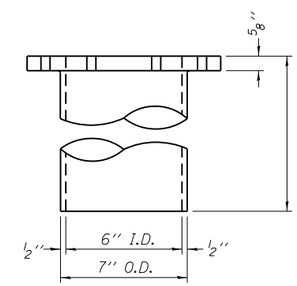

DOWNSPOUT

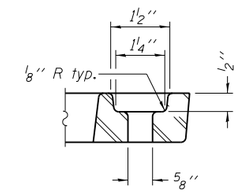

BOLT HOLE DETAIL

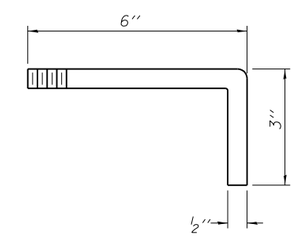

ANCHOR STUD DETAIL

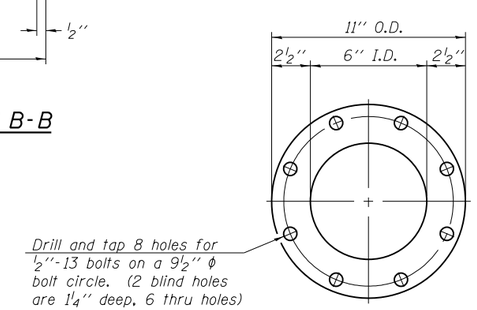

VIEW C-C

BILL OF MATERIAL

ITEM	UNIT	QUANTITY
Drainage Scuppers, DS-12	Each	17

DS-12 7-1-10

LOCHNER	USER NAME =	DESIGNED - LJB	REVISED	STATE OF ILLINOIS DEPARTMENT OF TRANSPORTATION	DRAINAGE SCUPPER DS-12 STRUCTURE NO. 016-D011	F.A.P. RTE.	SECTION	COUNTY	TOTAL SHEETS	SHEET NO.
H. W. LOCHNER, INC. 225 WEST WASHINGTON STREET 12 TH FLOOR CHICAGO, ILLINOIS 60606	FILE NAME = 016D011-60L72-048-SP.dgn	CHECKED - RH	REVISED			351	2010-081-R	COOK	1045	473
	PLOT SCALE =	DRAWN - EF	REVISED					CONTRACT NO. 60L72		
	PLOT DATE =	CHECKED - RH	REVISED		SHEET NO. 48 OF 77 SHEETS		ILLINOIS	FED. AID PROJECT		

\\MSCH\Chicago2\5186-US5\Struct\dgn\Land Bridges\Land Bridge 2 - 016-D011\016D011-60L72-048-SP.dgn

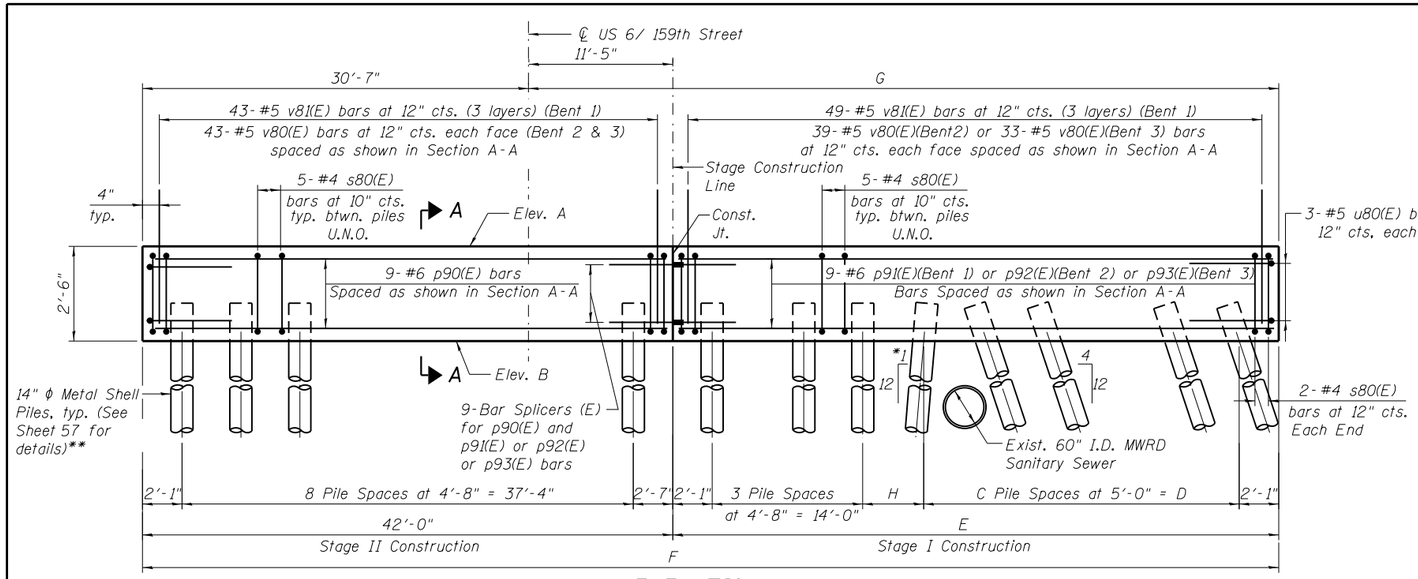

ELEVATION

(Looking East, For Bent 1 Thru Bent 3)
(Bent 1 Shown; Bent 2 & 3 Similar)

* Pile batter in direction of arrow shown in PLAN

** Space piles to miss exisiting 60" I.D. MWRD Sanitary Sewer (See Note 3)

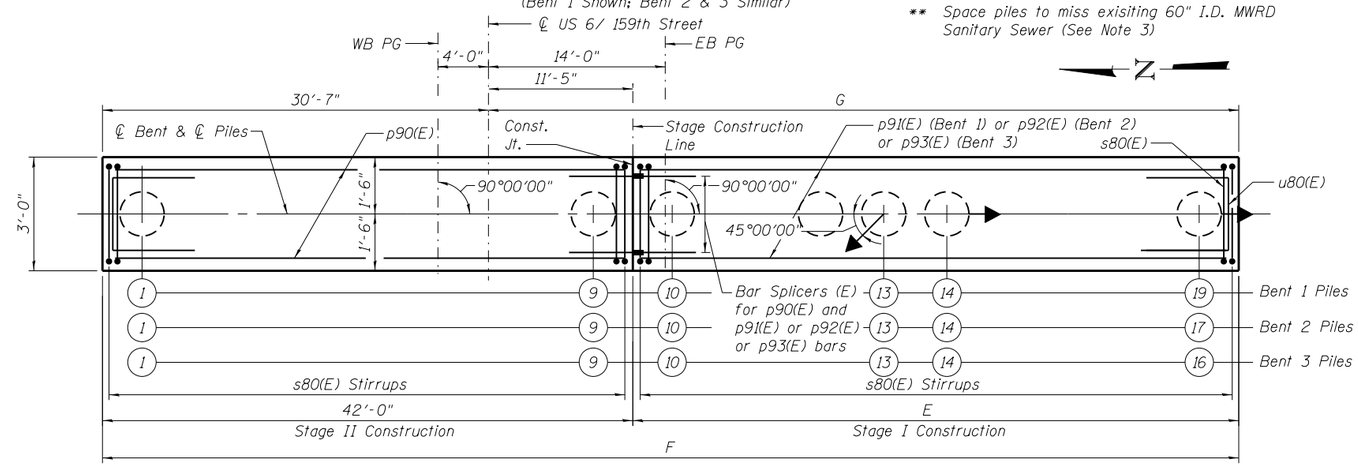

PLAN

(For Bent 1 Thru Bent 3)

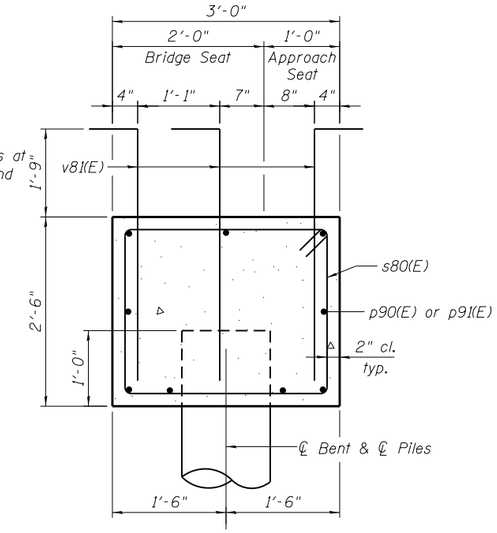

SECTION A-A THRU BENT 1

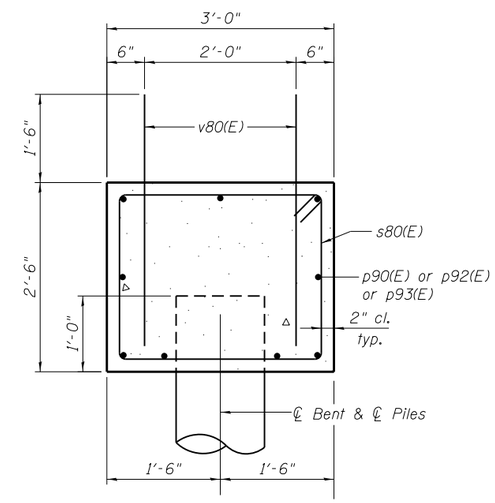

SECTION A-A THRU BENT 2 AND BENT 3

BILL OF MATERIAL BENT 1

Bar	No.	Size	Length	Shape
p90(E)	9	#6	41'-8"	
p91(E)	9	#6	47'-8"	
s80(E)	93	#4	10'-5"	
u80(E)	6	#5	7'-7"	
v81(E)	276	#5	4'-11"	
Concrete Structures			Cu. Yd.	25.0
Reinforcement Bars, Epoxy Coated			Pound	3,320
Structure Excavation			Cu. Yd.	34
Furnishing Metal Shell Piles - 14" X 0.25"			Foot	1.065
Driving Piles			Foot	1.065
Test Piles			Each	1

BILL OF MATERIAL BENT 2

Bar	No.	Size	Length	Shape
p90(E)	9	#6	41'-8"	
p92(E)	9	#6	37'-8"	
s80(E)	83	#4	10'-5"	
u80(E)	6	#5	7'-7"	
v80(E)	164	#5	3'-10"	
Concrete Structures			Cu. Yd.	22.2
Reinforcement Bars, Epoxy Coated			Pound	2,360
Structure Excavation			Cu. Yd.	23
Furnishing Metal Shell Piles - 14" X 0.25"			Foot	943
Driving Piles			Foot	943
Test Piles			Each	1

BILL OF MATERIAL BENT 3

Bar	No.	Size	Length	Shape
p90(E)	9	#6	41'-8"	
p93(E)	9	#6	32'-0"	
s80(E)	78	#4	10'-5"	
u80(E)	6	#5	7'-7"	
v80(E)	152	#5	3'-10"	
Concrete Structures			Cu. Yd.	20.7
Reinforcement Bars, Epoxy Coated			Pound	2,200
Structure Excavation			Cu. Yd.	30
Furnishing Metal Shell Piles - 14" X 0.25"			Foot	940
Driving Piles			Foot	940

BENT 1 PILE DATA

Type: Metal Shell - 14 in. dia. x 0.25 in. wall
Nominal Required Bearing: 282 kips
Factored Resistance Available: 140 kips
Est. Length: Piles 1-12 58 ft.
Piles 13-19 (Battered) 61 ft.
Precore to Elev. 670
No. Production Piles: 18
No. Test Piles: 1

BENT 2 PILE DATA

Type: Metal Shell - 14 in. dia. x 0.25 in. wall
Nominal Required Bearing: 282 kips
Factored Resistance Available: 140 kips
Est. Length: Piles 1-12 58 ft.
Piles 13-17 (Battered) 61 ft.
Precore to Elev. 670
No. Production Piles: 16
No. Test Piles: 1

BENT 3 PILE DATA

Type: Metal Shell - 14 in. dia. x 0.25 in. wall
Nominal Required Bearing: 282 kips
Factored Resistance Available: 140 kips
Est. Length: Piles 1-12 58 ft.
Piles 13-16 (Battered) 61 ft.
Precore to Elev. 670
No. Production Piles: 16
No. Test Piles: 0

BENT CAP TABLE

Bent #	Elev. A	Elev. B	C	D	E	F	G	H
Bent 1	686.58	684.08	5	25'-0"	48'-0"	90'-0"	59'-5"	4'-10"
Bent 2	686.74	684.24	3	15'-0"	38'-0"	80'-0"	49'-5"	4'-10"
Bent 3	686.80	684.30	2	10'-0"	32'-4 3/8"	74'-4 3/8"	43'-9 3/8"	4'-2 3/8"

LEGEND

Indicates Pile Battered in Direction of Arrow

Indicates Vertical Pile

NOTES

1. For Metal Shell Pile Details, see Sheet 57.
2. For pile bent layout, see Sheets 1 and 2.
3. The Contractor shall coordinate with MWRD to verify the location of the existing 60" I.D. MWRD sanitary sewer pipe in the field and advise the Engineer of discrepancies prior to the pile installation. The Contractor must take special precautions to avoid damage to the existing MWRD facilities when driving the 14" ϕ metal shell piles. The Contractor may propose other means of pile installation provided they are done so at no extra cost to the Department. If the Contractor elects to vary from the design requirements shown on the plans, revised design calculations and details shall be submitted to the Engineer for approval. The calculations shall be prepared and sealed by an Illinois Licensed Structural Engineer.

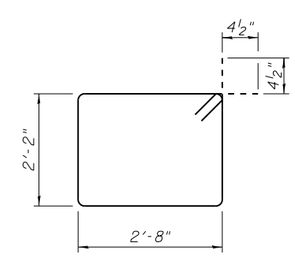

BAR s80(E)

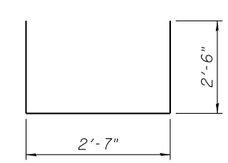

BAR u80(E)

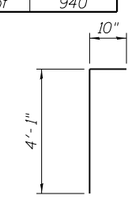

BAR v81(E)

\\MSCH\Chicago2\5186-US6\Struct\dgn\Land Bridges\Land Bridge 2 - 016-D011\016D011-60L72-049-BD.dgn

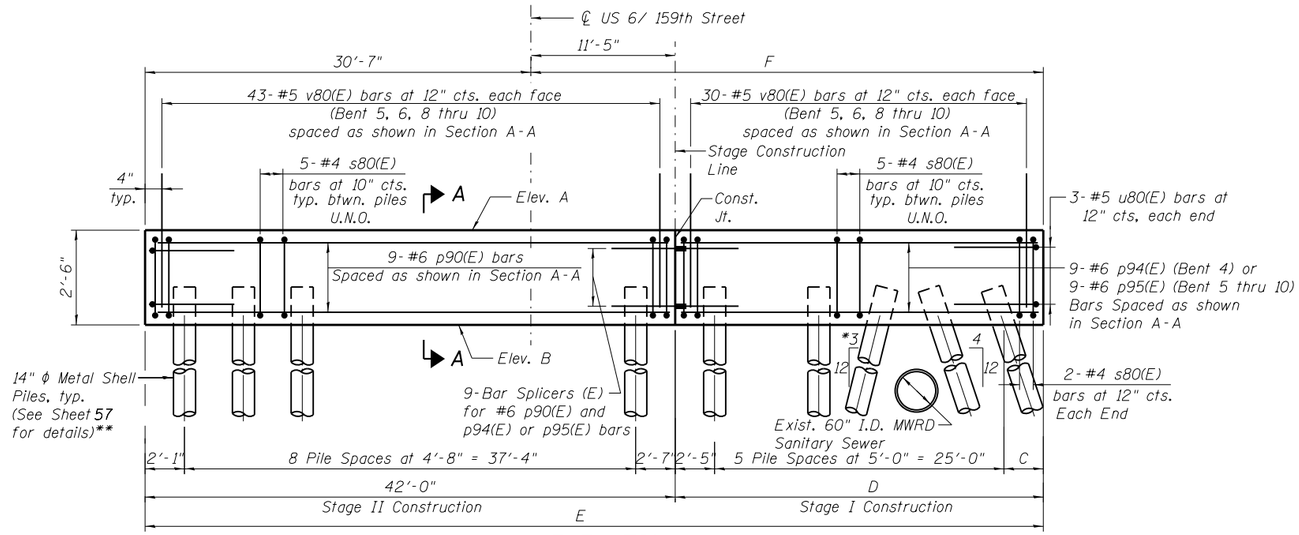

ELEVATION

(For Bent 4 Thru Bent 10)
(Looking East)

* Pile batter in direction of arrow shown in PLAN

** Space piles to miss exisiting 60" I.D. MWRD Sanitary Sewer (See Note 5)

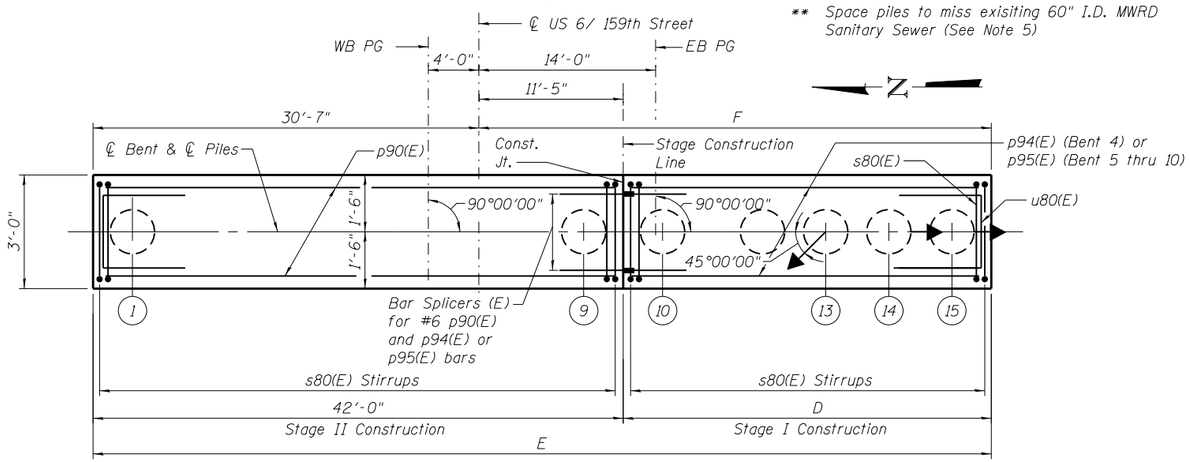

PLAN

(For Bent 4 Thru Bent 10)

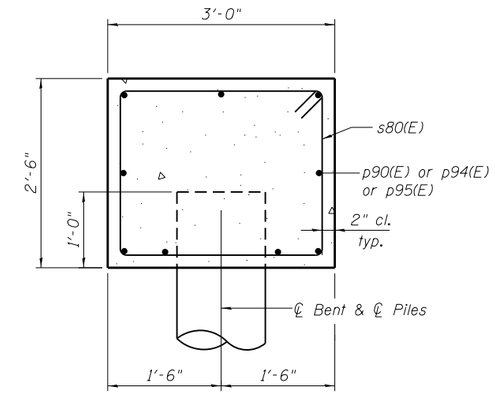

SECTION A-A THRU BENT 4 AND 7

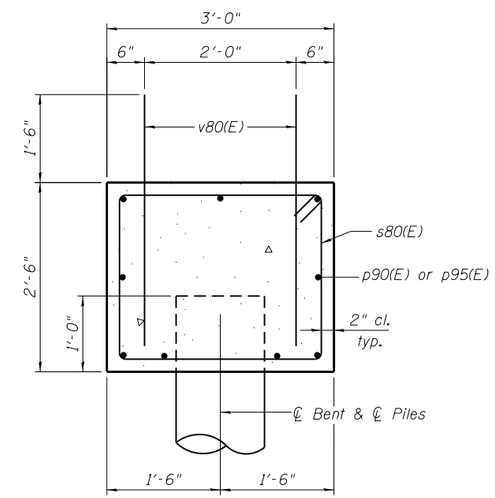

SECTION A-A THRU BENT 5, 6 AND 8 THRU 10

PILE DATA

Type: Metal Shell - 14 in. dia. x 0.25 in. wall
Nominal Required Bearing: See Table
Factored Resistance Available: See Table
Est. Length: See Table
No. Production Piles: See Table
No. Test Piles: See Table

LEGEND

Indicates Pile Battered in Direction of Arrow

Indicates Vertical Pile

BENT CAP TABLE

Bent #	Elev. A	Elev. B	C	D	E	F
Bent 4	686.63	684.13	2'-1 3/4"	29'-6 3/4"	71'-6 3/4"	40'-11 3/4"
Bent 5	686.43	683.93	1'-9"	29'-2"	71'-2"	40'-7"
Bent 6	686.20	683.70	1'-9"	29'-2"	71'-2"	40'-7"
Bent 7	685.98	683.48	1'-9"	29'-2"	71'-2"	40'-7"
Bent 8	685.75	683.25	1'-9"	29'-2"	71'-2"	40'-7"
Bent 9	685.52	683.02	1'-9"	29'-2"	71'-2"	40'-7"
Bent 10	685.31	682.81	1'-9"	29'-2"	71'-2"	40'-7"

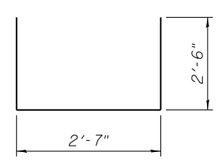

BAR u80(E)

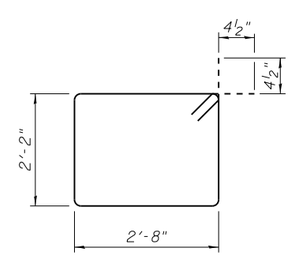

BAR s80(E)

NOTES

1. For Metal Shell Pile Details, see Sheet 57.
2. For Pile Data Table, see Sheet 54.
3. Apply Concrete Sealer to top and sides of bent cap of Bent 4 & 7.
4. For pile bent layout, see Sheets 1 and 2.
5. The Contractor shall coordinate with MWRD to verify the location of the existing 60" I.D. MWRD sanitary sewer pipe in the field and advise the Engineer of discrepancies prior to the pile installation. The Contractor must take special precautions to avoid damage to the existing MWRD facilities when driving the 14" ϕ metal shell piles. The Contractor may propose other means of pile installation provided they are done so at no extra cost to the Department. If the Contractor elects to vary from the design requirements shown on the plans, revised design calculations and details shall be submitted to the Engineer for approval. The calculations shall be prepared and sealed by an Illinois Licensed Structural Engineer.

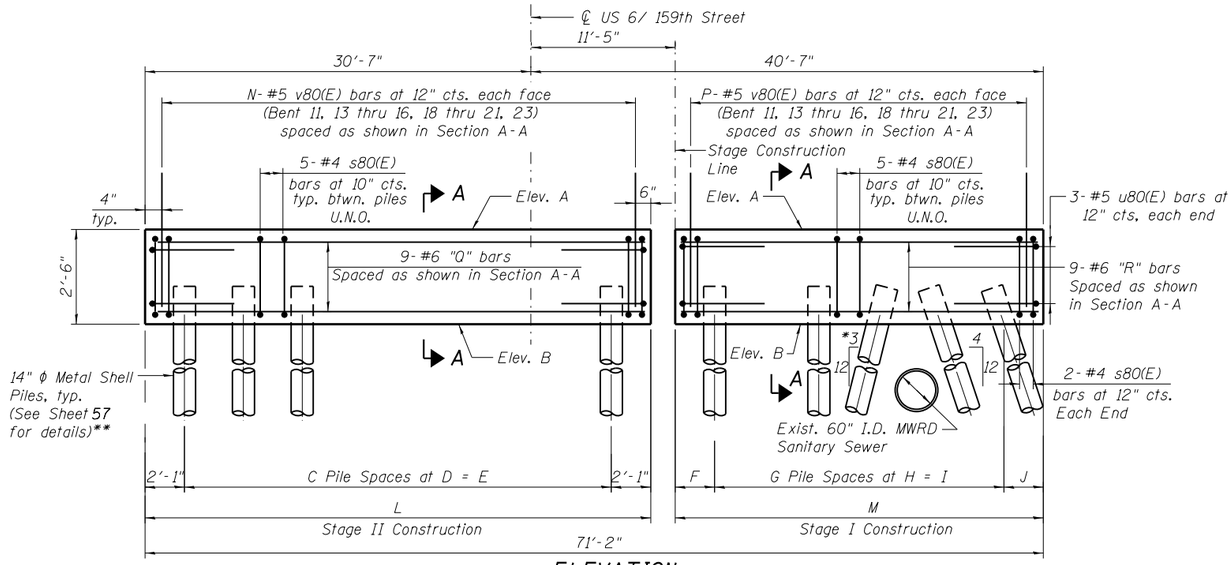

ELEVATION

(For Bent 11 Thru Bent 23)
(Looking East)

* Pile batter in direction of arrow shown in PLAN

** Space piles to miss exisiting 60" I.D. MWRD Sanitary Sewer (See Note 5)

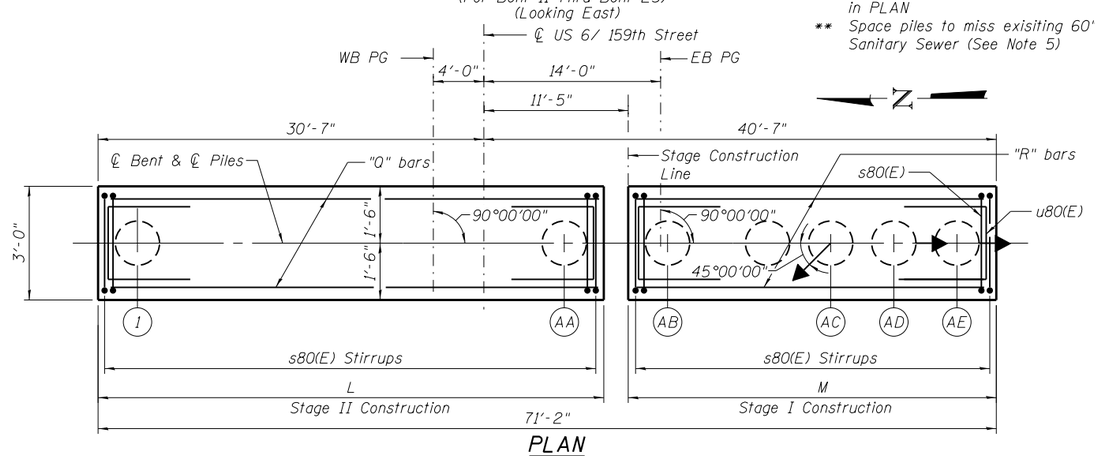

PLAN

(For Bent 11 Thru Bent 23)

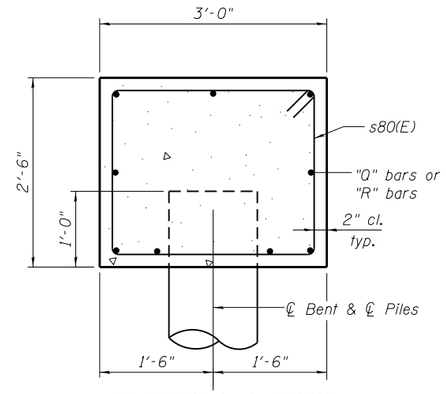

SECTION A-A THRU BENT 12, 17 AND 22

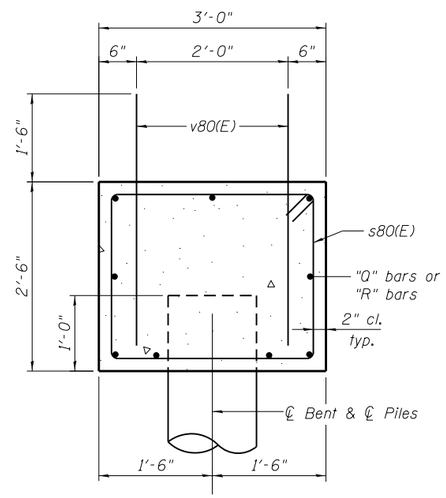

SECTION A-A THRU BENT 11, 13 THRU 16, 18 THRU 21 AND 23

PILE DATA

Type: Metal Shell - 14 in. dia. x 0.25 in. wall
Nominal Required Bearing: See Table
Factored Resistance Available: See Table
Est. Length: See Table
No. Production Piles: See Table
No. Test Piles: See Table

LEGEND

Indicates Pile Battered in Direction of Arrow

Indicates Vertical Pile

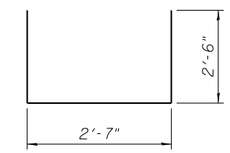

BAR u80(E)

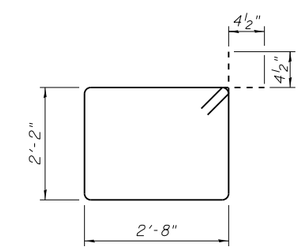

BAR s80(E)

BENT CAP TABLE

Bent #	Elev. A	Elev. B	C	D	E	F	G	H	I	J	L	M	N	P	Q	R	AA	AB	AC	AD	AE
Bent 11	685.13	682.63	8	4'-5 7/8"	35'-10 3/4"	2'-1"	5	5'-0"	25'-0"	2'-1"	40'-0 3/4"	29'-2"	41	30	p96(E)	p95(E)	9	10	13	14	15
Bent 12	685.00	682.50	7	4'-11 1/8"	34'-6 1/4"	2'-1"	5	5'-0"	25'-0"	2'-1"	38'-8 1/4"	29'-2"	-	-	p97(E)	p95(E)	8	9	12	13	14
Bent 13	684.91	682.41	7	4'-8 3/4"	33'-1 1/2"	2'-1"	5	5'-0"	25'-0"	2'-1"	37'-3 1/2"	29'-2"	38	30	p98(E)	p95(E)	8	9	12	13	14
Bent 14	684.87	682.37	7	4'-6 3/8"	31'-9"	2'-1"	5	5'-0"	25'-0"	2'-1"	35'-11"	29'-2"	37	30	p99(E)	p95(E)	8	9	12	13	14
Bent 15	684.87	682.37	7	4'-4"	30'-4 1/2"	2'-1"	5	5'-0"	25'-0"	2'-1"	34'-6 1/2"	29'-2"	36	30	p100(E)	p95(E)	8	9	12	13	14
Bent 16	684.91	682.41	6	4'-10"	29'-0"	2'-1"	5	5'-0"	25'-0"	2'-1"	33'-2"	29'-2"	34	30	p101(E)	p95(E)	7	8	11	12	13
Bent 17	684.99	682.49	6	4'-7 1/4"	27'-7 1/4"	2'-1"	5	5'-0"	25'-0"	2'-1"	31'-9 1/4"	29'-2"	-	-	p102(E)	p95(E)	7	8	11	12	13
Bent 18	685.09	682.59	6	4'-4 1/2"	26'-2 3/4"	2'-1"	5	5'-0"	25'-0"	2'-1"	30'-4 3/4"	29'-2"	31	30	p103(E)	p95(E)	7	8	11	12	13
Bent 19	685.18	682.68	5	5'-0"	25'-0"	2'-1"	5	5'-0"	25'-0"	2'-1"	29'-2"	29'-2"	30	30	p95(E)	p95(E)	6	7	10	11	12
Bent 20	685.27	682.77	5	5'-0"	25'-0"	2'-1"	5	5'-0"	25'-0"	2'-1"	29'-2"	29'-2"	30	30	p95(E)	p95(E)	6	7	10	11	12
Bent 21	685.36	682.86	5	5'-0"	25'-0"	2'-1"	5	5'-0"	25'-0"	2'-1"	29'-2"	29'-2"	30	30	p95(E)	p95(E)	6	7	10	11	12
Bent 22	685.45	682.95	5	5'-0"	25'-0"	2'-4 3/4"	5	5'-0"	25'-0"	2'-1"	29'-2"	29'-5 3/4"	-	-	p95(E)	p104(E)	6	7	10	11	12
Bent 23	685.55	683.05	5	5'-0"	25'-0"	2'-1"	6	4'-5 5/8"	26'-9 1/2"	2'-1"	29'-2"	30'-11 1/2"	30	32	p95(E)	p105(E)	6	7	11	12	13

NOTES

1. For Metal Shell Pile Details, see Sheet 57.
2. For Pile Data Table, see Sheet 54.
3. Apply Concrete Sealer to top and sides of bent cap of Bent 12, 17 & 22.
4. For pile bent layout, see Sheets 1 and 2.
5. The Contractor shall coordinate with MWRD to verify the location of the existing 60" I.D. MWRD sanitary sewer pipe in the field and advise the Engineer of discrepancies prior to the pile installation. The Contractor must take special precautions to avoid damage to the existing MWRD facilities when driving the 14" ϕ metal shell piles. The Contractor may propose other means of pile installation provided they are done so at no extra cost to the Department. If the Contractor elects to vary from the design requirements shown on the plans, revised design calculations and details shall be submitted to the Engineer for approval. The calculations shall be prepared and sealed by an Illinois Licensed Structural Engineer.

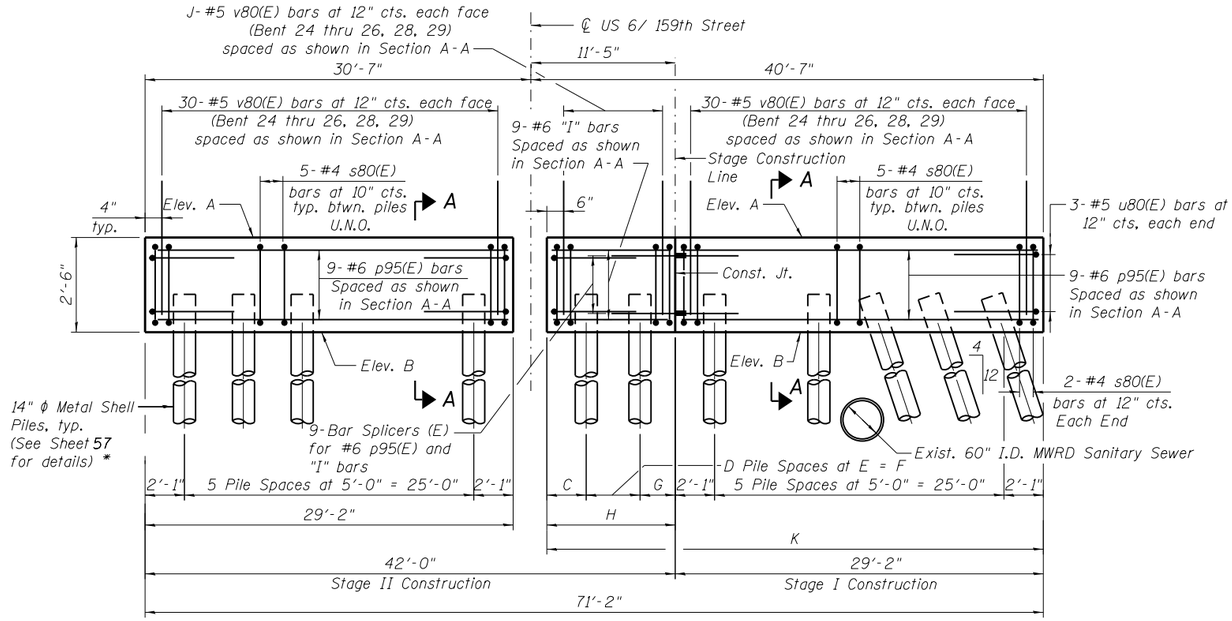

ELEVATION

(For Bent 24 Thru Bent 29)
(Looking East)

* Space piles to miss exisiting 60" I.D. MWRD Sanitary Sewer (See Note 5)

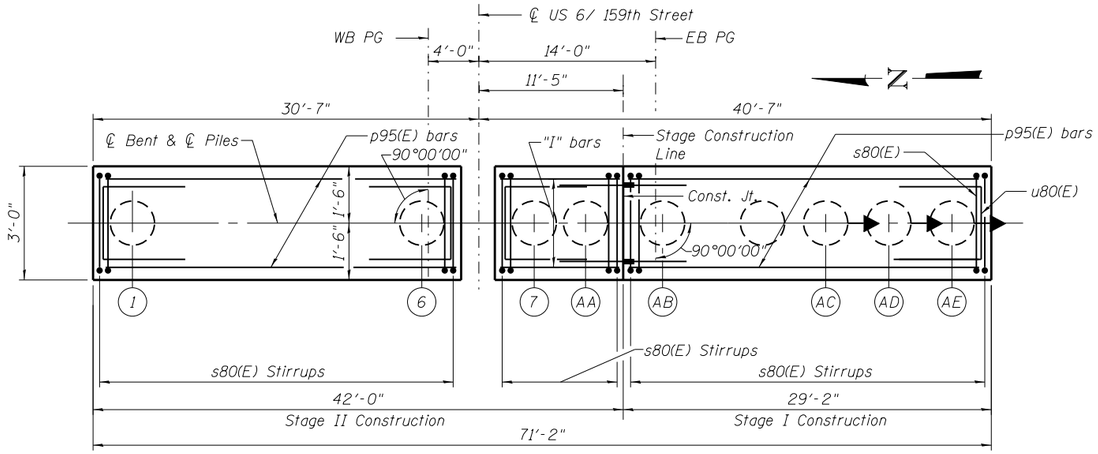

PLAN

(For Bent 24 Thru Bent 29)

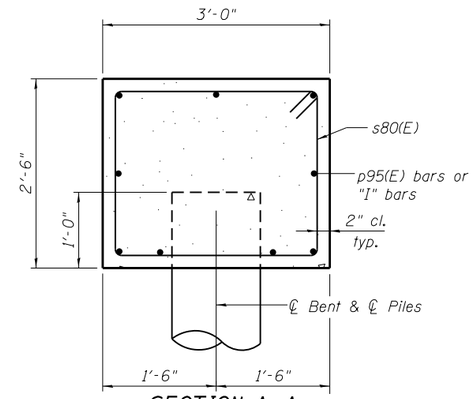

SECTION A-A THRU BENT 27

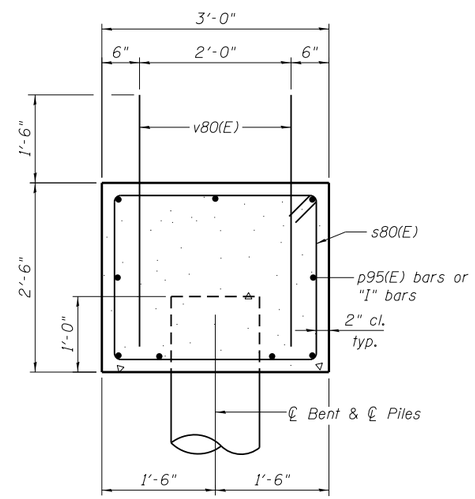

SECTION A-A THRU BENT 24 THRU 26, 28 AND 29

PILE DATA

Type: Metal Shell - 14 in. dia. x 0.25 in. wall
Nominal Required Bearing: See Table
Factored Resistance Available: See Table
Est. Length: See Table
No. Production Piles: See Table
No. Test Piles: See Table

LEGEND

Indicates Pile Battered in Direction of Arrow

Indicates Vertical Pile

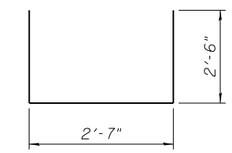

BAR u80(E)

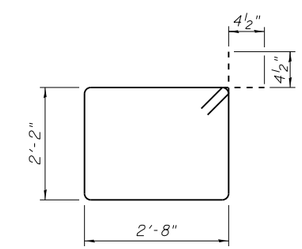

BAR s80(E)

BENT CAP TABLE

Bent #	Elev. A	Elev. B	C	D	E	F	G	H	I	J	K	AA	AB	AC	AD	AE
Bent 24	685.64	683.14	1'-6"	-	-	-	1'-9½"	3'-3½"	p106(E)	4	32'-5½"	-	8	11	12	13
Bent 25	685.73	683.23	2'-1"	-	-	-	2'-8¼"	4'-9¼"	p107(E)	5	33'-11¼"	-	8	11	12	13
Bent 26	685.82	683.32	1'-6"	1	3'-6"	3'-6"	1'-5"	6'-5"	p108(E)	7	35'-7"	8	9	12	13	14
Bent 27	685.91	683.41	1'-6"	1	4'-2¼"	4'-2¼"	2'-1"	7'-9¼"	p109(E)	-	36'-11¼"	8	9	12	13	14
Bent 28	686.01	683.51	1'-6"	1	4'-11"	4'-11"	2'-9¾"	9'-2¾"	p110(E)	10	38'-4¾"	8	9	12	13	14
Bent 29	686.10	683.60	1'-6"	2	3'-9¼"	7'-6½"	1'-8½"	10'-9"	p111(E)	11	39'-11"	9	10	13	14	15

NOTES

1. For Metal Shell Pile Details, see Sheet 57.
2. For Pile Data Table, see Sheet 54.
3. Apply Concrete Sealer to top and sides of bent cap of Bent 27.
4. For pile bent layout, see Sheets 1 and 2.
5. The Contractor shall coordinate with MWRD to verify the location of the existing 60" I.D. MWRD sanitary sewer pipe in the field and advise the Engineer of discrepancies prior to the pile installation. The Contractor must take special precautions to avoid damage to the existing MWRD facilities when driving the 14" ϕ metal shell piles. The Contractor may propose other means of pile installation provided they are done so at no extra cost to the Department. If the Contractor elects to vary from the design requirements shown on the plans, revised design calculations and details shall be submitted to the Engineer for approval. The calculations shall be prepared and sealed by an Illinois Licensed Structural Engineer.

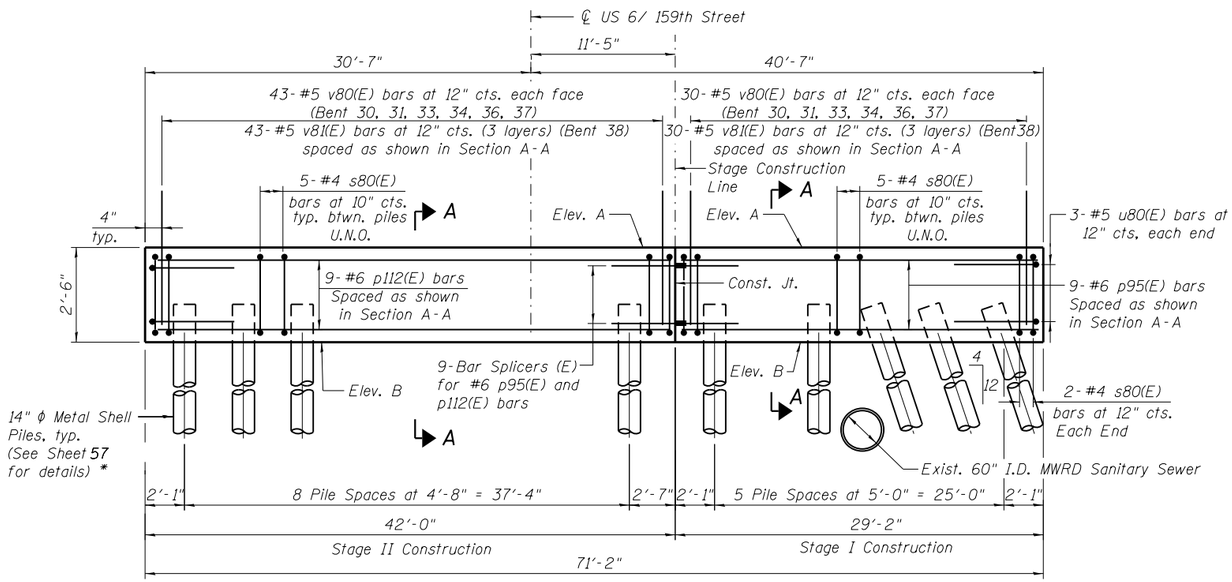

ELEVATION

(For Bent 30 Thru Bent 38)
(Looking East)

* Space piles to miss exisiting 60" I.D. MWRD Sanitary Sewer (See Note 5)

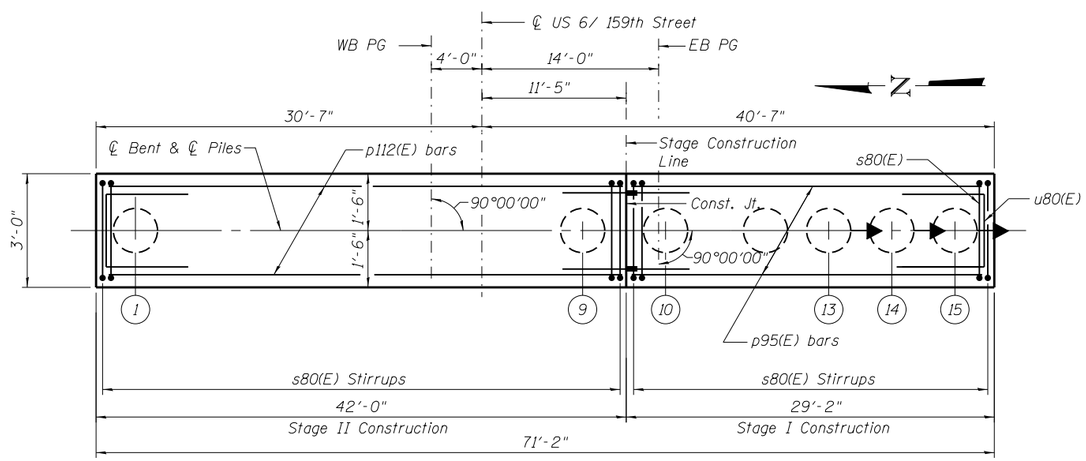

PLAN

(For Bent 30 Thru Bent 38)

BENT CAP TABLE

Bent #	Elev. A	Elev. B
Bent 30	686.19	683.69
Bent 31	686.28	683.78
Bent 32	686.37	683.87
Bent 33	686.47	683.97
Bent 34	686.56	684.06
Bent 35	686.65	684.15
Bent 36	686.74	684.24
Bent 37	686.83	684.33
Bent 38	686.93	684.43

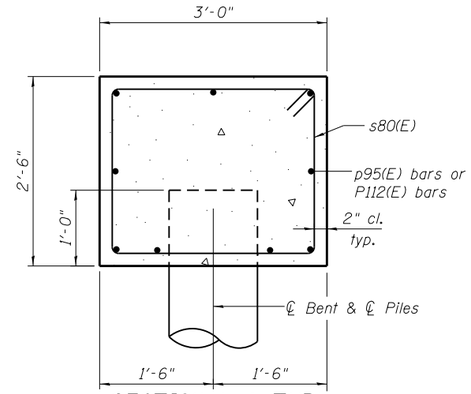

SECTION A-A THRU BENT 32 AND 35

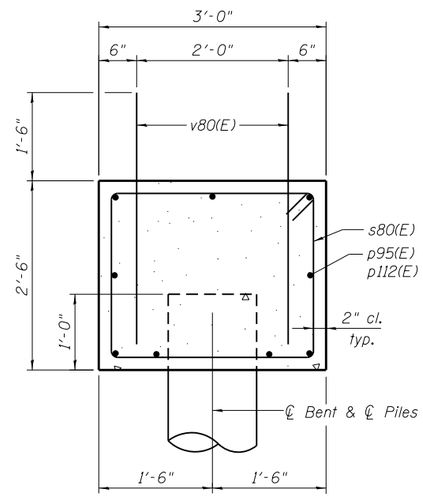

SECTION A-A THRU BENT 30, 31, 33, 34, 36 AND 37

PILE DATA

Type: Metal Shell - 14 in. dia. x 0.25 in. wall
Nominal Required Bearing: See Table
Factored Resistance Available: See Table
Est. Length: See Table
No. Production Piles: See Table
No. Test Piles: See Table

LEGEND

Indicates Pile Battered in Direction of Arrow

Indicates Vertical Pile

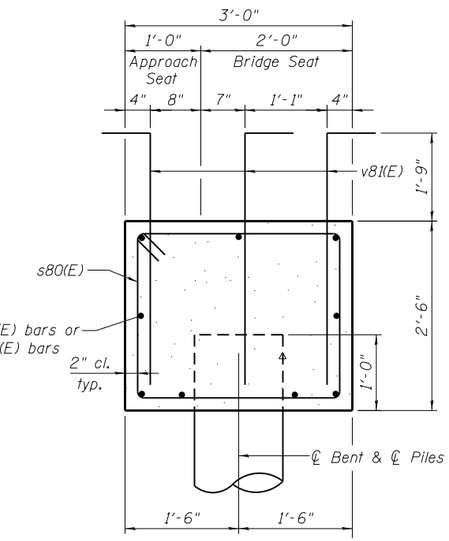

SECTION A-A THRU BENT 38

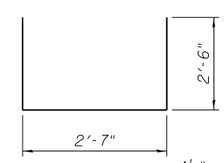

BAR u80(E)

BAR v81(E)

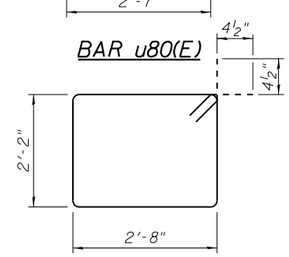

BAR s80(E)

NOTES

1. For Metal Shell Pile Details, see Sheet 57.
2. For Pile Data Table, see Sheet 54.
3. Apply Concrete Sealer to top and sides of bent cap of Bent 32 and 35.
4. For pile bent layout, see Sheets 1 and 2.
5. The Contractor shall coordinate with MWRD to verify the location of the existing 60" I.D. MWRD sanitary sewer pipe in the field and advise the Engineer of discrepancies prior to the pile installation. The Contractor must take special precautions to avoid damage to the existing MWRD facilities when driving the 14" ϕ metal shell piles. The Contractor may propose other means of pile installation provided they are done so at no extra cost to the Department. If the Contractor elects to vary from the design requirements shown on the plans, revised design calculations and details shall be submitted to the Engineer for approval. The calculations shall be prepared and sealed by an Illinois Licensed Structural Engineer.

PILE DATA TABLE

Bent	Nominal Required Bearing (kips)	Factored Resistance Available (kips)	Est. Pile Length (ft.)[1]	Est. Pile Length (ft.)[2]	Precore to Est. Elev.	No. Prod. Piles	No. Test Piles
4	315	148	52	55	670	15	0
5	315	148	52	55	670	14	1
6	315	148	52	55	670	14	1
7	315	148	52	55	670	15	0
8	334	140	63	67	670	15	0
9	334	140	63	67	670	14	1
10	334	140	63	67	670	14	1
11	307	146	48	51	670	15	0
12	362	176	50	53	670	14	0
13	362	176	50	53	670	13	1
14	301	165	45	48	670	13	1
15	301	165	45	48	670	14	0
16	261	144	63	67	670	13	0
17	261	144	63	67	670	12	1
18	413	227	36	38	670	12	1
19	413	227	36	38	670	12	0
20	282	155	51	54	670	12	0
21	282	155	51	54	670	11	1
22	282	155	51	54	670	11	1
23	293	144	41	44	670	13	0
24	293	144	41	44	670	13	0
25	293	144	41	44	670	12	1
26	293	144	41	44	670	13	1
27	270	148	41	44	670	14	0
28	270	148	41	44	670	14	0
29	413	178	57	60	670	14	1
30	413	178	57	60	670	14	1
31	257	141	49	52	670	15	0
32	257	141	49	52	670	15	0
33	275	151	60	63	670	14	1
34	275	151	60	63	670	14	1
35	275	151	60	63	670	15	0
36	275	151	60	63	670	15	0
37	284	156	47	50	670	14	1
38	284	156	47	50	670	14	1

[1] Vertical pile length. For vertical pile locations, see Sheet 50 thru Sheet 53.

[2] Battered pile length. For battered pile locations, see Sheet 50 thru Sheet 53.

BILL OF MATERIAL BENT 4

Bar	No.	Size	Length	Shape
p90(E)	9	#6	41'-8"	——
p94(E)	9	#6	29'-2"	——
s80(E)	73	#4	10'-5"	☐
u80(E)	6	#5	7'-7"	⊔
Concrete Structures			Cu. Yd.	19.9
Reinforcement Bars, Epoxy Coated			Pound	1,520
Structure Excavation			Cu. Yd.	33
Furnishing Metal Shell Piles - 14" X 0.25"			Foot	789
Driving Piles			Foot	789
Concrete Sealer			Sq. Ft.	588

BILL OF MATERIAL BENT 5

Bar	No.	Size	Length	Shape
p90(E)	9	#6	41'-8"	——
p95(E)	9	#6	28'-10"	——
s80(E)	73	#4	10'-5"	☐
u80(E)	6	#5	7'-7"	⊔
v80(E)	146	#5	3'-10"	——
Concrete Structures			Cu. Yd.	19.8
Reinforcement Bars, Epoxy Coated			Pound	2,100
Structure Excavation			Cu. Yd.	35
Furnishing Metal Shell Piles - 14" X 0.25"			Foot	737
Driving Piles			Foot	737
Test Piles			Each	1

BILL OF MATERIAL BENT 6

Bar	No.	Size	Length	Shape
p90(E)	9	#6	41'-8"	——
p95(E)	9	#6	28'-10"	——
s80(E)	73	#4	10'-5"	☐
u80(E)	6	#5	7'-7"	⊔
v80(E)	146	#5	3'-10"	——
Concrete Structures			Cu. Yd.	19.8
Reinforcement Bars, Epoxy Coated			Pound	2,100
Structure Excavation			Cu. Yd.	39
Furnishing Metal Shell Piles - 14" X 0.25"			Foot	737
Driving Piles			Foot	737
Test Piles			Each	1

BILL OF MATERIAL BENT 7

Bar	No.	Size	Length	Shape
p90(E)	9	#6	41'-8"	——
p95(E)	9	#6	28'-10"	——
s80(E)	73	#4	10'-5"	☐
u80(E)	6	#5	7'-7"	⊔
Concrete Structures			Cu. Yd.	19.8
Reinforcement Bars, Epoxy Coated			Pound	1,510
Structure Excavation			Cu. Yd.	42
Furnishing Metal Shell Piles - 14" X 0.25"			Foot	789
Driving Piles			Foot	789
Concrete Sealer			Sq. Ft.	584

BILL OF MATERIAL BENT 8

Bar	No.	Size	Length	Shape
p90(E)	9	#6	41'-8"	——
p95(E)	9	#6	28'-10"	——
s80(E)	73	#4	10'-5"	☐
u80(E)	6	#5	7'-7"	⊔
v80(E)	146	#5	3'-10"	——
Concrete Structures			Cu. Yd.	19.8
Reinforcement Bars, Epoxy Coated			Pound	2,100
Structure Excavation			Cu. Yd.	47
Furnishing Metal Shell Piles - 14" X 0.25"			Foot	957
Driving Piles			Foot	957

BILL OF MATERIAL BENT 9

Bar	No.	Size	Length	Shape
p90(E)	9	#6	41'-8"	——
p95(E)	9	#6	28'-10"	——
s80(E)	73	#4	10'-5"	☐
u80(E)	6	#5	7'-7"	⊔
v80(E)	146	#5	3'-10"	——
Concrete Structures			Cu. Yd.	19.8
Reinforcement Bars, Epoxy Coated			Pound	2,100
Structure Excavation			Cu. Yd.	51
Furnishing Metal Shell Piles - 14" X 0.25"			Foot	894
Driving Piles			Foot	894
Test Piles			Each	1

NOTES

1. For pile bent layout, see Sheets 1 and 2.
2. If peat soils are present above Elev. 670, the contractor shall cease the precore at the elevation peat is encounted in the field during construction.
3. For pile bent details, see Sheet 50 thru 53.
4. Cost of precoring for pile installation is included with DRIVING PILES.

BILL OF MATERIAL BENT 10

Bar	No.	Size	Length	Shape
p90(E)	9	#6	41'-8"	——
p95(E)	9	#6	28'-10"	——
s80(E)	73	#4	10'-5"	☐
u80(E)	6	#5	7'-7"	⊔
v80(E)	146	#5	3'-10"	——
Concrete Structures			Cu. Yd.	19.8
Reinforcement Bars, Epoxy Coated			Pound	2,100
Structure Excavation			Cu. Yd.	55
Furnishing Metal Shell Piles - 14" X 0.25"			Foot	894
Driving Piles			Foot	894
Test Piles			Each	1

BILL OF MATERIAL BENT 11

Bar	No.	Size	Length	Shape
p95(E)	9	#6	28'-10"	——
p96(E)	9	#6	39'-8"	——
s80(E)	73	#4	10'-5"	☐
u80(E)	12	#5	7'-7"	⊔
v80(E)	142	#5	3'-10"	——
Concrete Structures			Cu. Yd.	19.2
Reinforcement Bars, Epoxy Coated			Pound	2,100
Structure Excavation			Cu. Yd.	60
Furnishing Metal Shell Piles - 14" X 0.25"			Foot	729
Driving Piles			Foot	729

BILL OF MATERIAL BENT 12

Bar	No.	Size	Length	Shape
p95(E)	9	#6	28'-10"	——
p97(E)	9	#6	38'-4"	——
s80(E)	68	#4	10'-5"	☐
u80(E)	12	#5	7'-7"	⊔
Concrete Structures			Cu. Yd.	18.8
Reinforcement Bars, Epoxy Coated			Pound	1,480
Structure Excavation			Cu. Yd.	64
Furnishing Metal Shell Piles - 14" X 0.25"			Foot	709
Driving Piles			Foot	709
Concrete Sealer			Sq. Ft.	573

BILL OF MATERIAL BENT 13

Bar	No.	Size	Length	Shape
p95(E)	9	#6	28'-10"	——
p98(E)	9	#6	36'-11"	——
s80(E)	68	#4	10'-5"	☐
u80(E)	12	#5	7'-7"	⊔
v80(E)	136	#5	3'-10"	——
Concrete Structures			Cu. Yd.	18.5
Reinforcement Bars, Epoxy Coated			Pound	2,010
Structure Excavation			Cu. Yd.	67
Furnishing Metal Shell Piles - 14" X 0.25"			Foot	659
Driving Piles			Foot	659
Test Piles			Each	1

BILL OF MATERIAL BENT 14

Bar	No.	Size	Length	Shape
p95(E)	9	#6	28'-10"	——
p99(E)	9	#6	35'-7"	——
s80(E)	68	#4	10'-5"	☐
u80(E)	12	#5	7'-7"	⊔
v80(E)	134	#5	3'-10"	——
Concrete Structures			Cu. Yd.	18.1
Reinforcement Bars, Epoxy Coated			Pound	1,980
Structure Excavation			Cu. Yd.	66
Furnishing Metal Shell Piles - 14" X 0.25"			Foot	594
Driving Piles			Foot	594
Test Piles			Each	1

BILL OF MATERIAL BENT 15

Bar	No.	Size	Length	Shape
p95(E)	9	#6	28'-10"	——
p100(E)	9	#6	34'-2"	——
s80(E)	68	#4	10'-5"	☐
u80(E)	12	#5	7'-7"	⊔
v80(E)	132	#5	3'-10"	——
Concrete Structures			Cu. Yd.	17.7
Reinforcement Bars, Epoxy Coated			Pound	1,950
Structure Excavation			Cu. Yd.	65
Furnishing Metal Shell Piles - 14" X 0.25"			Foot	639
Driving Piles			Foot	639

BILL OF MATERIAL BENT 16

Bar	No.	Size	Length	Shape
p95(E)	9	#6	28'-10"	——
p101(E)	9	#6	32'-10"	——
s80(E)	63	#4	10'-5"	☐
u80(E)	12	#5	7'-7"	⊔
v80(E)	128	#5	3'-10"	——
Concrete Structures			Cu. Yd.	17.3
Reinforcement Bars, Epoxy Coated			Pound	1,880
Structure Excavation			Cu. Yd.	64
Furnishing Metal Shell Piles - 14" X 0.25"			Foot	831
Driving Piles			Foot	831

BILL OF MATERIAL BENT 17

Bar	No.	Size	Length	Shape
p95(E)	9	#6	28'-10"	——
p102(E)	9	#6	31'-5"	——
s80(E)	63	#4	10'-5"	☐
u80(E)	12	#5	7'-7"	⊔
Concrete Structures			Cu. Yd.	16.9
Reinforcement Bars, Epoxy Coated			Pound	1,350
Structure Excavation			Cu. Yd.	62
Furnishing Metal Shell Piles - 14" X 0.25"			Foot	768
Driving Piles			Foot	768
Test Piles			Each	1
Concrete Sealer			Sq. Ft.	518

BILL OF MATERIAL BENT 18

Bar	No.	Size	Length	Shape
p95(E)	9	#6	28'-10"	——
p103(E)	9	#6	30'-0"	——
s80(E)	63	#4	10'-5"	☐
u80(E)	12	#5	7'-7"	⊔
v80(E)	122	#5	3'-10"	——
Concrete Structures			Cu. Yd.	16.5
Reinforcement Bars, Epoxy Coated			Pound	1,820
Structure Excavation			Cu. Yd.	59
Furnishing Metal Shell Piles - 14" X 0.25"			Foot	438
Driving Piles			Foot	438
Test Piles			Each	1

BILL OF MATERIAL BENT 19

Bar	No.	Size	Length	Shape
p95(E)	18	#6	28'-10"	——
s80(E)	58	#4	10'-5"	☐
u80(E)	12	#5	7'-7"	⊔
v80(E)	120	#5	3'-10"	——
Concrete Structures			Cu. Yd.	16.2
Reinforcement Bars, Epoxy Coated			Pound	1,760
Structure Excavation			Cu. Yd.	57
Furnishing Metal Shell Piles - 14" X 0.25"			Foot	438
Driving Piles			Foot	438

BILL OF MATERIAL BENT 20

Bar	No.	Size	Length	Shape
p95(E)	18	#6	28'-10"	——
s80(E)	58	#4	10'-5"	☐
u80(E)	12	#5	7'-7"	⊔
v80(E)	120	#5	3'-10"	——
Concrete Structures			Cu. Yd.	16.2
Reinforcement Bars, Epoxy Coated			Pound	1,760
Structure Excavation			Cu. Yd.	55
Furnishing Metal Shell Piles - 14" X 0.25"			Foot	621
Driving Piles			Foot	621

BILL OF MATERIAL BENT 21

Bar	No.	Size	Length	Shape
p95(E)	18	#6	28'-10"	——
s80(E)	58	#4	10'-5"	☐
u80(E)	12	#5	7'-7"	⊔
v80(E)	120	#5	3'-10"	——
Concrete Structures			Cu. Yd.	16.2
Reinforcement Bars, Epoxy Coated			Pound	1,760
Structure Excavation			Cu. Yd.	54
Furnishing Metal Shell Piles - 14" X 0.25"			Foot	570
Driving Piles			Foot	570
Test Piles			Each	1

BILL OF MATERIAL BENT 22

Bar	No.	Size	Length	Shape
p95(E)	9	#6	28'-10"	——
p104(E)	9	#6	29'-1"	——
s80(E)	58	#4	10'-5"	☐
u80(E)	12	#5	7'-7"	⊔
Concrete Structures			Cu. Yd.	16.3
Reinforcement Bars, Epoxy Coated			Pound	1,290
Structure Excavation			Cu. Yd.	52
Furnishing Metal Shell Piles - 14" X 0.25"			Foot	570
Driving Piles			Foot	570
Test Piles			Each	1
Concrete Sealer			Sq. Ft.	499

BILL OF MATERIAL BENT 23

Bar	No.	Size	Length	Shape
p95(E)	9	#6	28'-10"	——
p105(E)	9	#6	30'-7"	——
s80(E)	63	#4	10'-5"	☐
u80(E)	12	#5	7'-7"	⊔
v80(E)	124	#5	3'-10"	——
Concrete Structures			Cu. Yd.	16.7
Reinforcement Bars, Epoxy Coated			Pound	1,840
Structure Excavation			Cu. Yd.	51
Furnishing Metal Shell Piles - 14" X 0.25"			Foot	542
Driving Piles			Foot	542

BILL OF MATERIAL BENT 24

Bar	No.	Size	Length	Shape
p95(E)	18	#6	28'-10"	——
p106(E)	9	#6	2'-11"	——
s80(E)	62	#4	10'-5"	☐
u80(E)	12	#5	7'-7"	⊔
v80(E)	128	#5	3'-10"	——
Concrete Structures			Cu. Yd.	17.1
Reinforcement Bars, Epoxy Coated			Pound	1,860
Structure Excavation			Cu. Yd.	50
Furnishing Metal Shell Piles - 14" X 0.25"			Foot	542
Driving Piles			Foot	542

BILL OF MATERIAL BENT 25

Bar	No.	Size	Length	Shape
p95(E)	18	#6	28'-10"	——
p107(E)	9	#6	4'-6"	——
s80(E)	62	#4	10'-5"	☐
u80(E)	12	#5	7'-7"	⊔
v80(E)	130	#5	3'-10"	——
Concrete Structures			Cu. Yd.	17.5
Reinforcement Bars, Epoxy Coated			Pound	1,890
Structure Excavation			Cu. Yd.	50
Furnishing Metal Shell Piles - 14" X 0.25"			Foot	501
Driving Piles			Foot	501
Test Piles			Each	1

BILL OF MATERIAL BENT 26

Bar	No.	Size	Length	Shape
p95(E)	18	#6	28'-10"	——
p108(E)	9	#6	6'-1"	——
s80(E)	67	#4	10'-5"	☐
u80(E)	12	#5	7'-7"	⊔
v80(E)	134	#5	3'-10"	——
Concrete Structures			Cu. Yd.	18.0
Reinforcement Bars, Epoxy Coated			Pound	1,960
Structure Excavation			Cu. Yd.	50
Furnishing Metal Shell Piles - 14" X 0.25"			Foot	542
Driving Piles			Foot	542
Test Piles			Each	1

BILL OF MATERIAL BENT 27

Bar	No.	Size	Length	Shape
p95(E)	18	#6	28'-10"	——
p109(E)	9	#6	7'-5"	——
s80(E)	67	#4	10'-5"	☐
u80(E)	12	#5	7'-7"	⊔
Concrete Structures			Cu. Yd.	18.4
Reinforcement Bars, Epoxy Coated			Pound	1,450
Structure Excavation			Cu. Yd.	48
Furnishing Metal Shell Piles - 14" X 0.25"			Foot	583
Driving Piles			Foot	583
Concrete Sealer			Sq. Ft.	559

BILL OF MATERIAL BENT 28

Bar	No.	Size	Length	Shape
p95(E)	18	#6	28'-10"	——
p110(E)	9	#6	8'-11"	——
s80(E)	67	#4	10'-5"	☐
u80(E)	12	#5	7'-7"	⊔
v80(E)	140	#5	3'-10"	——
Concrete Structures			Cu. Yd.	18.8
Reinforcement Bars, Epoxy Coated			Pound	2,030
Structure Excavation			Cu. Yd.	47
Furnishing Metal Shell Piles - 14" X 0.25"			Foot	583
Driving Piles			Foot	583

NOTE

1. For pile bent layout, see Sheets 1 and 2.

BILL OF MATERIAL BENT 29

Bar	No.	Size	Length	Shape
p95(E)	18	#6	28'-10"	——
p111(E)	9	#6	10'-5"	——
s80(E)	72	#4	10'-5"	☐
u80(E)	12	#5	7'-7"	⊔
v80(E)	142	#5	3'-10"	——
Concrete Structures			Cu. Yd.	19.2
Reinforcement Bars, Epoxy Coated			Pound	2,090
Structure Excavation			Cu. Yd.	45
Furnishing Metal Shell Piles - 14" X 0.25"			Foot	807
Driving Piles			Foot	807
Test Piles			Each	1

BILL OF MATERIAL BENT 30

Bar	No.	Size	Length	Shape
p95(E)	9	#6	28'-10"	——
p112(E)	9	#6	41'-8"	——
s80(E)	73	#4	10'-5"	☐
u80(E)	6	#5	7'-7"	⊔
v80(E)	146	#5	3'-10"	——
Concrete Structures			Cu. Yd.	19.8
Reinforcement Bars, Epoxy Coated			Pound	2,100
Structure Excavation			Cu. Yd.	44
Furnishing Metal Shell Piles - 14" X 0.25"			Foot	807
Driving Piles			Foot	807
Test Piles			Each	1

BILL OF MATERIAL BENT 31

Bar	No.	Size	Length	Shape
p95(E)	9	#6	28'-10"	——
p112(E)	9	#6	41'-8"	——
s80(E)	73	#4	10'-5"	☐
u80(E)	6	#5	7'-7"	⊔
v80(E)	146	#5	3'-10"	——
Concrete Structures			Cu. Yd.	19.8
Reinforcement Bars, Epoxy Coated			Pound	2,100
Structure Excavation			Cu. Yd.	41
Furnishing Metal Shell Piles - 14" X 0.25"			Foot	744
Driving Piles			Foot	744

BILL OF MATERIAL BENT 32

Bar	No.	Size	Length	Shape
p95(E)	9	#6	28'-10"	——
p112(E)	9	#6	41'-8"	——
s80(E)	73	#4	10'-5"	☐
u80(E)	6	#5	7'-7"	⊔
Concrete Structures			Cu. Yd.	19.8
Reinforcement Bars, Epoxy Coated			Pound	1,510
Structure Excavation			Cu. Yd.	40
Furnishing Metal Shell Piles - 14" X 0.25"			Foot	744
Driving Piles			Foot	744
Concrete Sealer			Sq. Ft.	584

BILL OF MATERIAL BENT 33

Bar	No.	Size	Length	Shape
p95(E)	9	#6	28'-10"	——
p112(E)	9	#6	41'-8"	——
s80(E)	73	#4	10'-5"	☐
u80(E)	6	#5	7'-7"	⊔
v80(E)	146	#5	3'-10"	——
Concrete Structures			Cu. Yd.	19.8
Reinforcement Bars, Epoxy Coated			Pound	2,100
Structure Excavation			Cu. Yd.	39
Furnishing Metal Shell Piles - 14" X 0.25"			Foot	849
Driving Piles			Foot	849
Test Piles			Each	1

BILL OF MATERIAL BENT 34

Bar	No.	Size	Length	Shape
p95(E)	9	#6	28'-10"	——
p112(E)	9	#6	41'-8"	——
s80(E)	73	#4	10'-5"	☐
u80(E)	6	#5	7'-7"	⊔
v80(E)	146	#5	3'-10"	——
Concrete Structures			Cu. Yd.	19.8
Reinforcement Bars, Epoxy Coated			Pound	2,100
Structure Excavation			Cu. Yd.	38
Furnishing Metal Shell Piles - 14" X 0.25"			Foot	849
Driving Piles			Foot	849
Test Piles			Each	1

BILL OF MATERIAL BENT 35

Bar	No.	Size	Length	Shape
p95(E)	9	#6	28'-10"	——
p112(E)	9	#6	41'-8"	——
s80(E)	73	#4	10'-5"	☐
u80(E)	6	#5	7'-7"	⊔
Concrete Structures			Cu. Yd.	19.8
Reinforcement Bars, Epoxy Coated			Pound	1,510
Structure Excavation			Cu. Yd.	36
Furnishing Metal Shell Piles - 14" X 0.25"			Foot	909
Driving Piles			Foot	909
Concrete Sealer			Sq. Ft.	584

BILL OF MATERIAL BENT 36

Bar	No.	Size	Length	Shape
p95(E)	9	#6	28'-10"	——
p112(E)	9	#6	41'-8"	——
s80(E)	73	#4	10'-5"	☐
u80(E)	6	#5	7'-7"	⊔
v80(E)	146	#5	3'-10"	——
Concrete Structures			Cu. Yd.	19.8
Reinforcement Bars, Epoxy Coated			Pound	2,100
Structure Excavation			Cu. Yd.	36
Furnishing Metal Shell Piles - 14" X 0.25"			Foot	909
Driving Piles			Foot	909

BILL OF MATERIAL BENT 37

Bar	No.	Size	Length	Shape
p95(E)	9	#6	28'-10"	——
p112(E)	9	#6	41'-8"	——
s80(E)	73	#4	10'-5"	☐
u80(E)	6	#5	7'-7"	⊔
v80(E)	146	#5	3'-10"	——
Concrete Structures			Cu. Yd.	19.8
Reinforcement Bars, Epoxy Coated			Pound	2,100
Structure Excavation			Cu. Yd.	35
Furnishing Metal Shell Piles - 14" X 0.25"			Foot	667
Driving Piles			Foot	667
Test Piles			Each	1

BILL OF MATERIAL BENT 38

Bar	No.	Size	Length	Shape
p95(E)	9	#6	28'-10"	——
p112(E)	9	#6	41'-8"	——
s80(E)	73	#4	10'-5"	☐
u80(E)	6	#5	7'-7"	⊔
v81(E)	219	#5	4'-11"	⊔
Concrete Structures			Cu. Yd.	19.8
Reinforcement Bars, Epoxy Coated			Pound	2,640
Structure Excavation			Cu. Yd.	49
Furnishing Metal Shell Piles - 14" X 0.25"			Foot	667
Driving Piles			Foot	667
Test Piles			Each	1

NOTE

1. For pile bent layout, see Sheets 1 and 2.

\\MASCH1\Chicago2\5108-USS\Struct\dgn\Land Bridges\Land Bridge 2 - 016-D011\016D011-60L72-056-BD.dgn

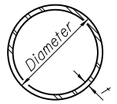

METAL SHELL PILE TABLE

Designation and outside diameter	Wall thickness t	Weight per foot (Lbs./ft.)	Inside volume (yd.^{3}/ft.)
PP12	0.179''	22.60	0.0274
PP12	0.250''	31.37	0.0267
PP14	0.250''	36.71	0.0368
PP14	0.312''	45.61	0.0361

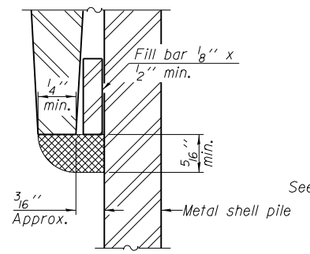

DETAIL A

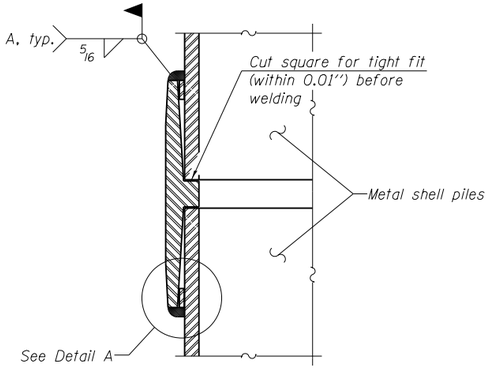

Notes:
The 1/8'' x 1/2'' min. fill bar may be constructed of 2 bars with a 1/8'' max. gap between them.
Pile segments shall be driven to solid contact with splicer before welding.

WELDED COMMERCIAL SPLICE

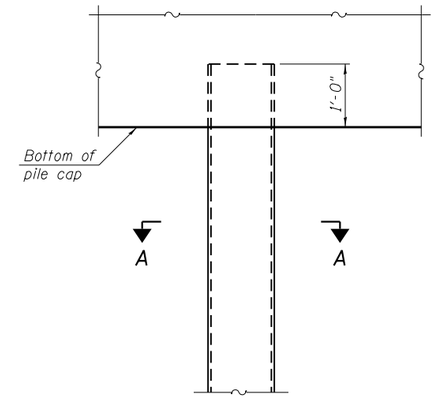

ELEVATION

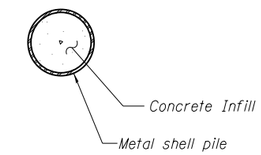

SECTION A-A

METAL SHELL PILE DETAILS AT PIERS

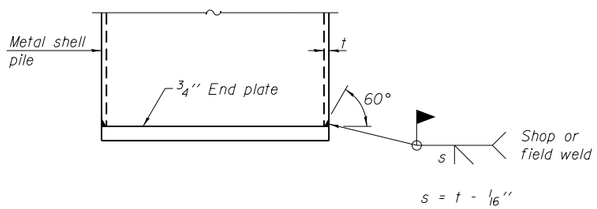

END PLATE ATTACHMENT

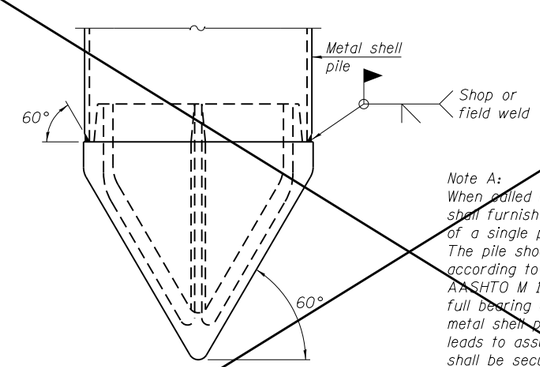

Note A:
When called for on the plans, the Contractor shall furnish metal shell pile shoes consisting of a single piece conical pile point as shown. The pile shoes shall be cast in one piece steel according to either ASTM A 148 Grade 90-60 or AASHTO M 103 Grade 65-35 and shall provide full bearing over the full circumference of the metal shell pile. The pile shoe shall have tapered leads to assure proper alignment and fitting and shall be secured to the pile with a circumferential weld.

METAL SHELL PILE SHOE ATTACHMENT

(See Note A)

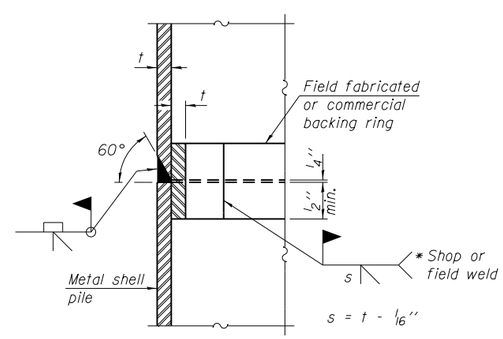

COMPLETE PENETRATION WELD SPLICE

* Field fabricated backing ring may be made from pile shell by removing segment to allow reducing circumference and vertically rejoin with partial joint penetration weld.

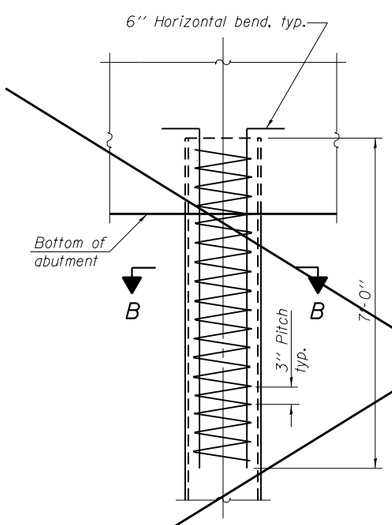

ELEVATION

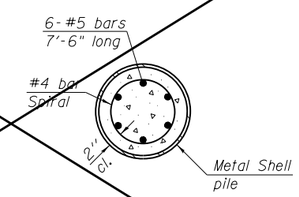

SECTION B-B

METAL SHELL REINFORCEMENT AT ABUTMENTS

Note:
The metal shell piles shall be according to ASTM A 252 Grade 3.

\\MSCH\Chicago2\5186-US6\Structdgn\Lend Bridges\Lend Bridge 2 - 016-D011\016D011-60L72-057-PD.dgn

LOCHNER H. W. LOCHNER, INC. 225 WEST WASHINGTON STREET 12 TH FLOOR CHICAGO, ILLINOIS 60606	USER NAME =	DESIGNED - RH	REVISED
	FILE NAME = 016D011-60L72-057-PD.dgn	CHECKED - LJB	REVISED
	PLOT SCALE =	DRAWN - RH	REVISED
	PLOT DATE =	CHECKED - LJB	REVISED

STATE OF ILLINOIS
DEPARTMENT OF TRANSPORTATION

METAL SHELL PILES
STRUCTURE NO. 016–D011
SHEET NO. 57 OF 77 SHEETS

F.A.P. RTE.	SECTION	COUNTY	TOTAL SHEETS	SHEET NO.
351	2010-081-R	COOK	1045	482
		CONTRACT NO. 60L72		
		ILLINOIS FED. AID PROJECT		

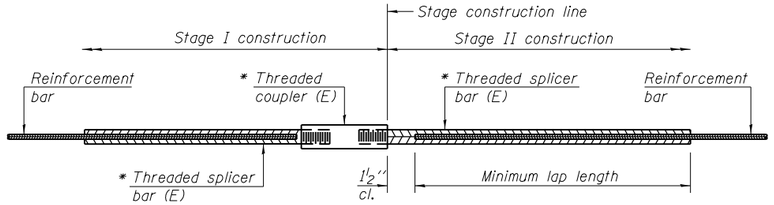

STANDARD BAR SPLICER ASSEMBLY

Minimum Lap Lengths						
Bar size to be spliced	Table 1	Table 2	Table 3	Table 4	Table 5	Table 6
3, 4	1'-5"	1'-11"	2'-1"	2'-4"	2'-7"	2'-11"
5	1'-9"	2'-5"	2'-7"	2'-11"	3'-3"	3'-8"
6	2'-1"	2'-11"	3'-1"	3'-6"	3'-10"	4'-5"
7	2'-9"	3'-10"	4'-2"	4'-8"	5'-2"	5'-10"
8	3'-8"	5'-1"	5'-5"	6'-2"	6'-9"	7'-8"
9	4'-7"	6'-5"	6'-10"	7'-9"	8'-7"	9'-8"

Table 1: Black bar, 0.8 Class C
Table 2: Black bar, Top bar lap, 0.8 Class C
Table 3: Epoxy bar, 0.8 Class C
Table 4: Epoxy bar, Top bar lap, 0.8 Class C
Table 5: Epoxy bar, Class C
Table 6: Epoxy bar, Top bar top, Class C

Threaded splicer bar length = min. lap length + 1½" + thread length

* Epoxy not required on Bar Splicer Assembly components used in conjunction with black bars.

Location	Bar size	No. assemblies required	Table for minimum lap length
Bent 1 thru 10	#6	90	Table 4
Bent 24 thru 38	#6	135	Table 4
Deck Unit 1 thru 3	#5	464	Table 6

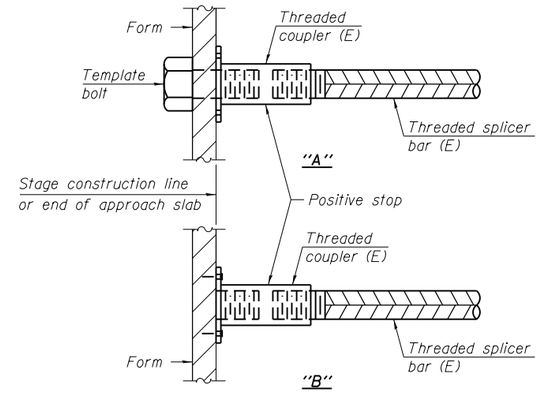

INSTALLATION AND SETTING METHODS

"A" : Set bar splicer assembly by means of a template bolt.
"B" : Set bar splicer assembly by nailing to wood forms or cementing to steel forms.
(E) : Indicates epoxy coating.

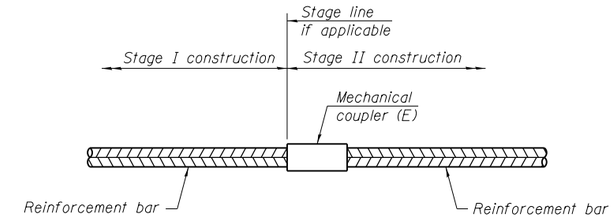

STANDARD MECHANICAL SPLICER

Location	Bar size	No. assemblies required
Deck Unit 6	#5	230
Deck Unit 6	#8	30
Deck Unit 7	#5	275
Deck Unit 8	#5	166
Deck Unit 9	#5	166
West Approach	#4	25
West Approach	#5	86
East Approach	#4	25
East Approach	#5	86

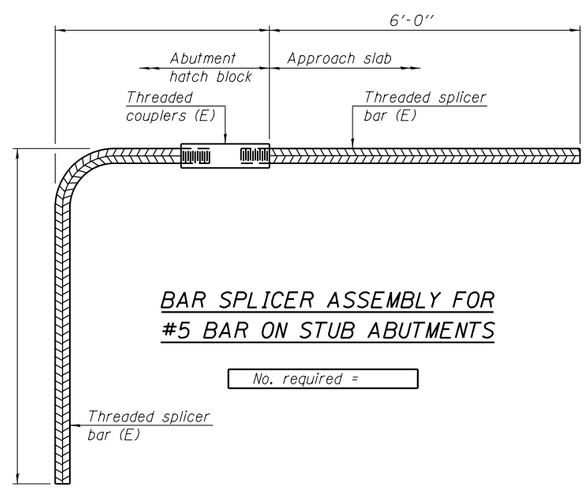

BAR SPLICER ASSEMBLY FOR #5 BAR ON STUB ABUTMENTS

No. required =

NOTES

Splicer bars shall be deformed with threaded ends and have a minimum 60 ksi yield strength.

All reinforcement shall be lapped and tied to the splicer bars.

Bar splicer assemblies shall be epoxy coated according to the requirements for reinforcement bars. See Section 508 of the Standard Specifications.

See approved list of bar splicer assemblies and mechanical splicers for alternatives.

BSD-1 8-31-12

\\MSCH1\Chicago2\5106-US61\Struct\dgn\Land Bridges\Land Bridge 2 - 016-D011\016D011-60L72-058-BS.dgn

Geo Services, Inc.
Geotechnical, Environmental & Civil Engineering
805 Aimwright Court, Suite 204
Naperville, Illinois 60565
(630) 355-0556

SOIL BORING LOG

GSI Job No. 10195
Page 1 of 1
Date 4/26/12

ROUTE IL Route 7/U.S. Route 6 (159th St.) DESCRIPTION IL Rte. 7 from Will Cook Rd. to Ravinia Av. LOGGED BY RR

SECTION 2010-081-R LOCATION SW1/4, SEC. 16, TWP. T36N, RNG. R12E, 3rd PM

COUNTY Cook DRILLING METHOD HAND AUGER HAMMER TYPE

STRUCT. NO. 016-D011
Station
BORING NO. HA-29
Station 382+42
Offset 36.20ft Left
Ground Surface Elev. 680.20 ft

Surface Water Elev. n/a ft
Stream Bed Elev. n/a ft
Groundwater Elev.:
First Encounter Dry ft
Upon Completion n/a ft
After ___ Hrs. ___ ft

Description	Elev.	DEPTH (ft)	BLOWS (/6")	UCS Qu (tsf)	MOIST (%)
SANDY TOPSOIL with GRAVEL-black					13
	678.30				
Auger Refusal @ -1.9' Unknown Obstruction		-5			
		-10			
		-15			
		-20			

The Unconfined Compressive Strength (UCS) Failure Mode is indicated by (B-Bulge, S-Shear, P-Penetrometer)
The SPT (N value) is the sum of the last two blow values in each sampling zone (AASHTO T206)
BBS, from 137 (Rev. 8-99)

Geo Services, Inc.
Geotechnical, Environmental & Civil Engineering
805 Aimwright Court, Suite 204
Naperville, Illinois 60565
(630) 355-0556

SOIL BORING LOG

GSI Job No. 10195
Page 1 of 1
Date 4/26/12

ROUTE IL Route 7/U.S. Route 6 (159th St.) DESCRIPTION IL Rte. 7 from Will Cook Rd. to Ravinia Av. LOGGED BY RR

SECTION 2010-081-R LOCATION SW1/4, SEC. 16, TWP. T36N, RNG. R12E, 3rd PM

COUNTY Cook DRILLING METHOD HAND AUGER HAMMER TYPE

STRUCT. NO. 016-D011
Station
BORING NO. HA-30
Station 383+05
Offset 34.80ft Left
Ground Surface Elev. 680.00 ft

Surface Water Elev. n/a ft
Stream Bed Elev. n/a ft
Groundwater Elev.:
First Encounter 674.0 ft ▼
Upon Completion n/a ft
After ___ Hrs. ___ ft

Description	Elev.	DEPTH (ft)	BLOWS (/6")	UCS Qu (tsf)	MOIST (%)
TOPSOIL-black					17
	677.00			1.3 P	27
CLAY-dark brown & gray-soft to stiff (Fill)		-5		0.3 P	30
	673.50				
SILTY CLAY-dark brown, gray & black-very stiff				2.0 P	25
	671.00				23
CLAY-brown & gray-very stiff	670.00	-10			
End Of Boring @ -10.0'. Boring backfilled with cuttings.		-15			
		-20			

The Unconfined Compressive Strength (UCS) Failure Mode is indicated by (B-Bulge, S-Shear, P-Penetrometer)
The SPT (N value) is the sum of the last two blow values in each sampling zone (AASHTO T206)
BBS, from 137 (Rev. 8-99)

Geo Services, Inc.
Geotechnical, Environmental & Civil Engineering
805 Aimwright Court, Suite 204
Naperville, Illinois 60565
(630) 355-0556

SOIL BORING LOG

GSI Job No. 10195
Page 1 of 1
Date 4/26/12

ROUTE IL Route 7/U.S. Route 6 (159th St.) DESCRIPTION IL Rte. 7 from Will Cook Rd. to Ravinia Av. LOGGED BY RR

SECTION 2010-081-R LOCATION SW1/4, SEC. 16, TWP. T36N, RNG. R12E, 3rd PM

COUNTY Cook DRILLING METHOD HAND AUGER HAMMER TYPE

STRUCT. NO. 016-D011
Station
BORING NO. HA-31
Station 383+67
Offset 34.60ft Left
Ground Surface Elev. 680.10 ft

Surface Water Elev. n/a ft
Stream Bed Elev. n/a ft
Groundwater Elev.:
First Encounter 672.1 ft ▼
Upon Completion n/a ft
After ___ Hrs. ___ ft

Description	Elev.	DEPTH (ft)	BLOWS (/6")	UCS Qu (tsf)	MOIST (%)
TOPSOIL-black	679.60				
CLAY-brown & gray-very stiff (Fill)				3.3 P	20
	677.60				
CLAYEY SAND, GRAVEL & ASPHALT-dark brown & black (Fill)					10
	676.10				
CLAY-brown, gray & black-stiff to very stiff (Fill)		-5		1.3 P	27
				3.0 P	19
				1.8 P	26
	670.10	-10			
End Of Boring @ -10.0'. Boring backfilled with cuttings.		-15			
		-20			

The Unconfined Compressive Strength (UCS) Failure Mode is indicated by (B-Bulge, S-Shear, P-Penetrometer)
The SPT (N value) is the sum of the last two blow values in each sampling zone (AASHTO T206)
BBS, from 137 (Rev. 8-99)

Z:\PROJECTS\2010\10195 H.W.LOCHNER, IL 7 WILL COOK RD. TO US 45 (PTB 157 5)\10195 BORING1 LOGS\10195_LOG.GPJ 5/17/12

\\WASCHI\Chicago2\5186-USB\Structdgn\Land Bridges\Land Bridge 2 - 016-D011\016D011-60L72-059-SB.dgn

LOCHNER	USER NAME =	DESIGNED -	REVISED	STATE OF ILLINOIS DEPARTMENT OF TRANSPORTATION	SOIL BORINGS 1 STRUCTURE NO. 016-D011	F.A.P. RTE.	SECTION	COUNTY	TOTAL SHEETS	SHEET NO.
H. W. LOCHNER, INC. 225 WEST WASHINGTON STREET 12 TH FLOOR CHICAGO, ILLINOIS 60606	FILE NAME = 016D011-60L72-059-SB.dgn	CHECKED -	REVISED			351	2010-081-R	COOK	1045	484
	PLOT SCALE =	DRAWN - EF	REVISED					CONTRACT NO. 60L72		
	PLOT DATE =	CHECKED - RH	REVISED		SHEET NO. 59 OF 77 SHEETS		ILLINOIS FED. AID PROJECT			

Geo Services, Inc.
Geotechnical, Environmental & Civil Engineering
805 Aimwhist Court, Suite 204
Naperville, Illinois 60565
(630) 355-0966

SOIL BORING LOG

GSI Job No. 10195
Page 1 of 1
Date 4/26/12

ROUTE IL Route 7/U.S. Route 6 (159th St.) DESCRIPTION IL Rte. 7 from Will Cook Rd. to Ravinia Av. LOGGED BY RR

SECTION 2010-081-R LOCATION SW1/4, SEC. 16, TWP. T36N, RNG. R12E, 3rd PM

COUNTY Cook DRILLING METHOD HAND AUGER HAMMER TYPE

STRUCT. NO. 016-D011
Station
BORING NO. HA-32
Station 384+39
Offset 33.40ft Left
Ground Surface Elev. 682.90 ft

Surface Water Elev. n/a ft
Stream Bed Elev. n/a ft
Groundwater Elev.:
First Encounter Dry ft
Upon Completion n/a ft
After ___ Hrs. ___ ft

Description	Elev.	DEPTH (ft)	BLOWS (/6")	UCS Qu (tsf)	MOIST (%)
CLAY-dark brown, gray & black-stiff to very stiff (Fill)					17
				2.3 P	27
		-5		1.8 P	24
				1.5 P	26
				1.3 P	27
End Of Boring @ -10.0'. Boring backfilled with cuttings.	672.90	-10			
		-15			
		-20			

The Unconfined Compressive Strength (UCS) Failure Mode is indicated by (B-Bulge, S-Shear, P-Penetrometer)
The SPT (N value) is the sum of the last two blow values in each sampling zone (AASHTO T206)
BBS, from 137 (Rev. 8-99)

Z:\PROJECTS\2010\10195 H-W LOCHNER IL 7 WILL COOK RD. TO US 45 (PTB 157 5\10\95 BORING LOGS\10195_LOG.GPJ 5/17/12

Geo Services, Inc.
Geotechnical, Environmental & Civil Engineering
805 Aimwhist Court, Suite 204
Naperville, Illinois 60565
(630) 355-0966

SOIL BORING LOG

GSI Job No. 10195
Page 1 of 1
Date 4/26/12

ROUTE IL Route 7/U.S. Route 6 (159th St.) DESCRIPTION IL Rte. 7 from Will Cook Rd. to Ravinia Av. LOGGED BY RR

SECTION 2010-081-R LOCATION SW1/4, SEC. 16, TWP. T36N, RNG. R12E, 3rd PM

COUNTY Cook DRILLING METHOD HAND AUGER HAMMER TYPE

STRUCT. NO. 016-D011
Station
BORING NO. HA-33
Station 385+20
Offset 31.00ft Left
Ground Surface Elev. 684.60 ft

Surface Water Elev. n/a ft
Stream Bed Elev. n/a ft
Groundwater Elev.:
First Encounter Dry ft
Upon Completion n/a ft
After ___ Hrs. ___ ft

Description	Elev.	DEPTH (ft)	BLOWS (/6")	UCS Qu (tsf)	MOIST (%)
CLAY-dark brown, gray & black-stiff to very stiff (Fill)				2.8 P	20
				1.3 P	26
		-5		3.3 P	25
TOPSOIL-black (Fill)	678.10				29
CLAY-dark brown, gray & black-very stiff (Fill)	676.10			2.0 P	40
End Of Boring @ -10.0'. Boring backfilled with cuttings.	674.60	-10			
		-15			
		-20			

The Unconfined Compressive Strength (UCS) Failure Mode is indicated by (B-Bulge, S-Shear, P-Penetrometer)
The SPT (N value) is the sum of the last two blow values in each sampling zone (AASHTO T206)
BBS, from 137 (Rev. 8-99)

Z:\PROJECTS\2010\10195 H-W LOCHNER IL 7 WILL COOK RD. TO US 45 (PTB 157 5\10\95 BORING LOGS\10195_LOG.GPJ 5/17/12

Geo Services, Inc.
Geotechnical, Environmental & Civil Engineering
805 Aimwhist Court, Suite 204
Naperville, Illinois 60565
(630) 355-0966

SOIL BORING LOG

GSI Job No. 10195
Page 1 of 1
Date 4/25/12

ROUTE IL Route 7/U.S. Route 6 (159th St.) DESCRIPTION IL Rte. 7 from Will Cook Rd. to Ravinia Av. LOGGED BY RR

SECTION 2010-081-R LOCATION SW1/4, SEC. 16, TWP. T36N, RNG. R12E, 3rd PM

COUNTY Cook DRILLING METHOD HAND AUGER HAMMER TYPE

STRUCT. NO. 016-D011
Station
BORING NO. HA-34
Station 386+00
Offset 33.80ft Left
Ground Surface Elev. 685.00 ft

Surface Water Elev. n/a ft
Stream Bed Elev. n/a ft
Groundwater Elev.:
First Encounter 680.0 ft ▼
Upon Completion n/a ft
After ___ Hrs. ___ ft

Description	Elev.	DEPTH (ft)	BLOWS (/6")	UCS Qu (tsf)	MOIST (%)
TOPSOIL-black	684.50				
SILTY CLAY-dark brown & gray-very stiff				2.3 P	27
				2.5 P	33
		▼ -5			30
PEAT-black	679.00				
					350
SILTY CLAY-brown & gray-medium stiff	677.50			0.8 P	33
End Of Boring @ -10.0'. Boring backfilled with cuttings.	675.00	-10			
		-15			
		-20			

The Unconfined Compressive Strength (UCS) Failure Mode is indicated by (B-Bulge, S-Shear, P-Penetrometer)
The SPT (N value) is the sum of the last two blow values in each sampling zone (AASHTO T206)
BBS, from 137 (Rev. 8-99)

Z:\PROJECTS\2010\10195 H-W LOCHNER IL 7 WILL COOK RD. TO US 45 (PTB 157 5\10\95 BORING LOGS\10195_LOG.GPJ 5/17/12

\\N4SCH1\Chicago2\5186-USGS\Struct\dgn\Land Bridges\Land Bridge 2 - 016-D011\016D011-60L72-060-SB.dgn

LOCHNER	USER NAME =	DESIGNED -	REVISED	STATE OF ILLINOIS DEPARTMENT OF TRANSPORTATION	SOIL BORINGS 2 STRUCTURE NO. 016-D011	F.A.P. RTE.	SECTION	COUNTY	TOTAL SHEETS	SHEET NO.
H. W. LOCHNER, INC. 225 WEST WASHINGTON STREET 12 TH FLOOR CHICAGO, ILLINOIS 60606	FILE NAME = 016D011-60L72-060-SB.dgn	CHECKED -	REVISED			351	2010-081-R	COOK	1045	485
	PLOT SCALE =	DRAWN - EF	REVISED			CONTRACT NO. 60L72				
	PLOT DATE =	CHECKED - RH	REVISED		SHEET NO. 60 OF 77 SHEETS	ILLINOIS FED. AID PROJECT				

Geo Services, Inc.
Geotechnical, Environmental & Civil Engineering
805 Annehill Court, Suite 204
Naperville, Illinois 60565
(630) 505-0986

GSI Job No. 10195

SOIL BORING LOG

Page 1 of 1

Date 4/24/12

ROUTE IL Route 7/U.S. Route 6 (159th St.) DESCRIPTION IL Rte. 7 from Will Cook Rd. to Ravinia Av. LOGGED BY RR

SECTION 2010-081-R LOCATION SW1/4, SEC. 16, TWP. T36N, RNG. R12E, 3rd PM

COUNTY Cook DRILLING METHOD HAND AUGER HAMMER TYPE

STRUCT. NO. 016-D011
Station
BORING NO. HA-35
Station 386+86
Offset 34.30ft Left
Ground Surface Elev. 685.10 ft

Surface Water Elev. n/a ft
Stream Bed Elev. n/a ft
Groundwater Elev.:
First Encounter 679.1 ft
Upon Completion n/a ft
After ___ Hrs. ___ ft

Description	Elev.	DEPTH (ft)	BLOWS (/6")	UCS Qu (tsf)	MOIST (%)
TOPSOIL-dark brown to black	684.10				21
CLAY LOAM-brown & gray-stiff to very stiff (Fill)	680.60			3.0 P	18
PEAT-brown & black	676.60	-5		1.8 P	26
ORGANIC SILTY CLAY-dark gray	675.10	-10			107
End Of Boring @ -10.0'. Boring backfilled with cuttings.		-15			47
		-20			

The Unconfined Compressive Strength (UCS) Failure Mode is indicated by (B-Bulge, S-Shear, P-Penetrometer)
The SPT (N value) is the sum of the last two blow values in each sampling zone (AASHTO T206)
BBS, from 137 (Rev. 8-99)

Z:\PROJECTS\2010\10195 H.W.LOCHNER, IL 7 WILL COOK RD. TO US 45 (PTB 157, 5)\10195 BORINGS LOGS\10195_LOG.GPJ 9/17/12

Geo Services, Inc.
Geotechnical, Environmental & Civil Engineering
805 Annehill Court, Suite 204
Naperville, Illinois 60565
(630) 505-0986

GSI Job No. 10195

SOIL BORING LOG

Page 1 of 1

Date 4/24/12

ROUTE IL Route 7/U.S. Route 6 (159th St.) DESCRIPTION IL Rte. 7 from Will Cook Rd. to Ravinia Av. LOGGED BY RR

SECTION 2010-081-R LOCATION SW1/4, SEC. 16, TWP. T36N, RNG. R12E, 3rd PM

COUNTY Cook DRILLING METHOD HAND AUGER HAMMER TYPE

STRUCT. NO. 016-D011
Station
BORING NO. HA-36
Station 387+70
Offset 36.00ft Left
Ground Surface Elev. 684.60 ft

Surface Water Elev. n/a ft
Stream Bed Elev. n/a ft
Groundwater Elev.:
First Encounter Dry ft
Upon Completion n/a ft
After ___ Hrs. ___ ft

Description	Elev.	DEPTH (ft)	BLOWS (/6")	UCS Qu (tsf)	MOIST (%)
TOPSOIL-black	684.10				
CLAY LOAM-dark brown, gray & black-medium stiff to very stiff (Fill)				2.5 P	21
					29
		-5		1.3 P	29
				0.5 P	29
	674.60	-10		1.0 P	24
End Of Boring @ -10.0'. Boring backfilled with cuttings.		-15			
		-20			

The Unconfined Compressive Strength (UCS) Failure Mode is indicated by (B-Bulge, S-Shear, P-Penetrometer)
The SPT (N value) is the sum of the last two blow values in each sampling zone (AASHTO T206)
BBS, from 137 (Rev. 8-99)

Z:\PROJECTS\2010\10195 H.W.LOCHNER, IL 7 WILL COOK RD. TO US 45 (PTB 157, 5)\10195 BORINGS LOGS\10195_LOG.GPJ 9/17/12

Geo Services, Inc.
Geotechnical, Environmental & Civil Engineering
805 Annehill Court, Suite 204
Naperville, Illinois 60565
(630) 505-0986

GSI Job No. 10195

SOIL BORING LOG

Page 1 of 1

Date 4/24/12

ROUTE IL Route 7/U.S. Route 6 (159th St.) DESCRIPTION IL Rte. 7 from Will Cook Rd. to Ravinia Av. LOGGED BY RR

SECTION 2010-081-R LOCATION SW1/4, SEC. 16, TWP. T36N, RNG. R12E, 3rd PM

COUNTY Cook DRILLING METHOD HAND AUGER HAMMER TYPE

STRUCT. NO. 016-D011
Station
BORING NO. HA-37
Station 388+78
Offset 33.30ft Left
Ground Surface Elev. 683.30 ft

Surface Water Elev. n/a ft
Stream Bed Elev. n/a ft
Groundwater Elev.:
First Encounter 675.3 ft
Upon Completion n/a ft
After ___ Hrs. ___ ft

Description	Elev.	DEPTH (ft)	BLOWS (/6")	UCS Qu (tsf)	MOIST (%)
TOPSOIL-black	682.80				32
CLAY LOAM-brown-stiff	680.30			1.8 P	23
TOPSOIL-black	678.30	-5		1.3 P	33
SILTY CLAY-brown & gray-stiff	673.30	-10		1.3 P	24
End Of Boring @ -10.0'. Boring backfilled with cuttings.		-15		1.5 P	19
		-20			

The Unconfined Compressive Strength (UCS) Failure Mode is indicated by (B-Bulge, S-Shear, P-Penetrometer)
The SPT (N value) is the sum of the last two blow values in each sampling zone (AASHTO T206)
BBS, from 137 (Rev. 8-99)

Z:\PROJECTS\2010\10195 H.W.LOCHNER, IL 7 WILL COOK RD. TO US 45 (PTB 157, 5)\10195 BORINGS LOGS\10195_LOG.GPJ 9/17/12

\\WMSCHI\Chicago2\5186-USS\Struct\dgn\Land Bridges\Land Bridge 2 - 016-D011\016D011-60L72-061-SB.dgn

Geo Services, Inc.
Geotechnical, Environmental & Civil Engineering
805 Aimwell Court, Suite 204
Naperville, Illinois 60565
(630) 355-2666

SOIL BORING LOG

GSI Job No. 10195
Page 1 of 1
Date 4/24/12

ROUTE IL Route 7/U.S. Route 6 (159th St.) DESCRIPTION IL Rte. 7 from Will Cook Rd. to Ravinia Av. LOGGED BY RR

SECTION 2010-081-R LOCATION SW1/4, SEC. 16, TWP. T36N, RNG. R12E, 3rd PM

COUNTY Cook DRILLING METHOD HAND AUGER HAMMER TYPE

STRUCT. NO. 016-D011
Station
BORING NO. HA-38
Station 389+53
Offset 33.70ft Left
Ground Surface Elev. 682.90 ft

Surface Water Elev. n/a ft
Stream Bed Elev. n/a ft
Groundwater Elev.:
First Encounter 677.4 ft ▼
Upon Completion n/a ft
After ___ Hrs. ___ ft

Description	Elev.	Depth (ft)	Blows (/6")	UCS Qu (tsf)	Moist (%)
CLAY LOAM-brown-very stiff (Fill)				2.3 P	21
	680.90				
TOPSOIL-black					13
	678.90				
CLAY LOAM-dark brown & gray-stiff (Fill)	677.90	-5		1.0 P	24
PEAT-dark brown & black ▼					321
					485
	672.90	-10			
End Of Boring @ -10.0'. Boring backfilled with cuttings.		-15			
		-20			

The Unconfined Compressive Strength (UCS) Failure Mode is indicated by (B-Bulge, S-Shear, P-Penetrometer)
The SPT (N value) is the sum of the last two blow values in each sampling zone (AASHTO T206)
BBS, from 137 (Rev. 8-99)

Geo Services, Inc.
Geotechnical, Environmental & Civil Engineering
805 Aimwell Court, Suite 204
Naperville, Illinois 60565
(630) 355-2666

SOIL BORING LOG

GSI Job No. 10195
Page 1 of 1
Date 4/24/12

ROUTE IL Route 7/U.S. Route 6 (159th St.) DESCRIPTION IL Rte. 7 from Will Cook Rd. to Ravinia Av. LOGGED BY RR

SECTION 2010-081-R LOCATION SW1/4, SEC. 16, TWP. T36N, RNG. R12E, 3rd PM

COUNTY Cook DRILLING METHOD HAND AUGER HAMMER TYPE

STRUCT. NO. 016-D011
Station
BORING NO. HA-39
Station 390+61
Offset 32.80ft Left
Ground Surface Elev. 684.60 ft

Surface Water Elev. n/a ft
Stream Bed Elev. n/a ft
Groundwater Elev.:
First Encounter 679.6 ft ▼
Upon Completion n/a ft
After ___ Hrs. ___ ft

Description	Elev.	Depth (ft)	Blows (/6")	UCS Qu (tsf)	Moist (%)
SANDY TOPSOIL-black					15
	681.60				18
SILTY SAND & GRAVEL-dark brown		▼ -5			21
	677.10				22
SILTY LOAM-gray					20
End Of Boring @ -10.0'. Boring backfilled with cuttings.	674.60	-10			
		-15			
		-20			

The Unconfined Compressive Strength (UCS) Failure Mode is indicated by (B-Bulge, S-Shear, P-Penetrometer)
The SPT (N value) is the sum of the last two blow values in each sampling zone (AASHTO T206)
BBS, from 137 (Rev. 8-99)

Geo Services, Inc.
Geotechnical, Environmental & Civil Engineering
805 Aimwell Court, Suite 204
Naperville, Illinois 60565
(630) 355-2866

SOIL BORING LOG

GSI Job No. 10195
Page 1 of 2
Date 3/8/12

ROUTE IL Route 7/U.S. Route 6 (159th St.) DESCRIPTION IL Rte. 7 from Will Cook Rd. to Ravinia Av. LOGGED BY RR

SECTION 2010-081-R LOCATION SW1/4, SEC. 16, TWP. T36N, RNG. R12E, 3rd PM

COUNTY Cook DRILLING METHOD HSA/ROTARY HAMMER TYPE CME Automatic

STRUCT. NO. 016-D011
Station
BORING NO. SB-12
Station 382+47
Offset 23.10ft Right
Ground Surface Elev. 686.60 ft

Surface Water Elev. n/a ft
Stream Bed Elev. n/a ft
Groundwater Elev.:
First Encounter Dry to 10' ft
Upon Completion n/a ft
After Hrs. ft

Description	Elev.	DEPTH (ft)	BLOWS (/6")	UCS Qu (tsf)	MOIST (%)
ASPHALT	686.30				
CRUSHED STONE-medium dense (Fill)			5		
			10		9
			11		
SILTY CLAY LOAM-dark brown & gray-stiff to hard	683.60		3		
			4	0.6	26
		-5	6	B	
			5		
			7	4.5	17
			10	P	
			3		
			4	2.5	23
		-10	5	P	
			4		
			3	1.5	24
			2	B	
PEAT-dark brown & black-very loose to loose	673.60		2		
			2		117
		-15	2		
			2		
			2		331
			3		
			1		
			1		451
		-20	1		
PEAT-dark brown & black-very loose to loose *(continued)*			2		
			2	0.8	203
			2	P	
SILTY CLAY LOAM-gray-very loose	663.60		1		
			1	0.5	27
		-25	1	P	
			1		
			1	1.0	23
			1	P	
			2		
			1		26
		-30	2		
CLAY-gray-stiff	654.60		4		
			5	1.8	22
		-35	9	B	
			4		
			7	1.4	23
		-40	8	B	

The Unconfined Compressive Strength (UCS) Failure Mode is indicated by (B-Bulge, S-Shear, P-Penetrometer)
The SPT (N value) is the sum of the last two blow values in each sampling zone (AASHTO T206)

BBS, from 137 (Rev. 8-99)

Geo Services, Inc.
Geotechnical, Environmental & Civil Engineering
805 Aimwell Court, Suite 204
Naperville, Illinois 60565
(630) 355-2866

SOIL BORING LOG

GSI Job No. 10195
Page 2 of 2
Date 3/8/12

ROUTE IL Route 7/U.S. Route 6 (159th St.) DESCRIPTION IL Rte. 7 from Will Cook Rd. to Ravinia Av. LOGGED BY RR

SECTION 2010-081-R LOCATION SW1/4, SEC. 16, TWP. T36N, RNG. R12E, 3rd PM

COUNTY Cook DRILLING METHOD HSA/ROTARY HAMMER TYPE CME Automatic

STRUCT. NO. 016-D011
Station
BORING NO. SB-12
Station 382+47
Offset 23.10ft Right
Ground Surface Elev. 686.60 ft

Surface Water Elev. n/a ft
Stream Bed Elev. n/a ft
Groundwater Elev.:
First Encounter Dry to 10' ft
Upon Completion n/a ft
After Hrs. ft

Description	Elev.	DEPTH (ft)	BLOWS (/6")	UCS Qu (tsf)	MOIST (%)
CLAY-gray-stiff *(continued)*			4		
			6	1.0	24
		-45	7	B	
CLAYEY SAND & GRAVEL-gray-medium dense	639.60		12		
			12		16
		-50	7		
SILTY CLAY LOAM-gray-stiff	634.60		4		
			11	1.5	21
		-55	10	P	
CLAYEY SAND & GRAVEL-gray-medium dense	629.60		8		
			8		14
		-60	8		
CLAYEY SAND & GRAVEL-gray-medium dense *(continued)*			9		
			7		9
		-65	8		
			9		
			7		20
		-70	6		
SAND-gray-medium dense	614.60		7		
			8		18
		-75	6		
End Of Boring @ -75.0'. Boring backfilled with cuttings.	611.60				
		-80			

The Unconfined Compressive Strength (UCS) Failure Mode is indicated by (B-Bulge, S-Shear, P-Penetrometer)
The SPT (N value) is the sum of the last two blow values in each sampling zone (AASHTO T206)

BBS, from 137 (Rev. 8-99)

Z:\PROJECTS\2010\10195 H.W.LOCHNER, IL 7 WILL COOK RD. TO US 45 (PTB 157-5)\10195 BORING\ 1 FOR\10195_LOG.GPJ 9/17/12

Z:\PROJECTS\2010\10195 H.W.LOCHNER, IL 7 WILL COOK RD. TO US 45 (PTB 157-5)\10195 BORING\ 1 FOR\10195 BORING LOGS\10195_LOG.GPJ 9/17/12

\\MASCH1\Chicago2\5106-US6\Structs\dgn\Land Bridges\Land Bridge 2 - 016-D011\016D011-60L72-063-SB.dgn

LOCHNER
H. W. LOCHNER, INC.
225 WEST WASHINGTON STREET
12 TH FLOOR
CHICAGO, ILLINOIS 60606

USER NAME =	DESIGNED -	REVISED
FILE NAME = 016D011-60L72-063-SB.dgn	CHECKED -	REVISED
PLOT SCALE =	DRAWN - EF	REVISED
PLOT DATE =	CHECKED - RH	REVISED

STATE OF ILLINOIS
DEPARTMENT OF TRANSPORTATION

SOIL BORINGS 5
STRUCTURE NO. 016-D011
SHEET NO. 63 OF 77 SHEETS

F.A.P. RTE.	SECTION	COUNTY	TOTAL SHEETS	SHEET NO.
351	2010-081-R	COOK	1045	488

CONTRACT NO. 60L72
ILLINOIS FED. AID PROJECT

Geo Services, Inc.
Geotechnical, Environmental & Civil Engineering
805 Aimwell Court, Suite 204
Naperville, Illinois 60565
(630) 355-3586

SOIL BORING LOG

GSI Job No. 10195
Page 1 of 2
Date 3/5/12

ROUTE IL Route 7/U.S. Route 6 (159th St.) DESCRIPTION IL Rte. 7 from Will Cook Rd. to Ravinia Av. LOGGED BY JZ

SECTION 2010-081-R LOCATION SW1/4, SEC. 16, TWP. T36N, RNG. R12E, 3rd PM

COUNTY Cook DRILLING METHOD HSA/ROTARY HAMMER TYPE CME Automatic

STRUCT. NO. 016-D011
Station
BORING NO. SB-13
Station 383+15
Offset 25.00ft Left
Ground Surface Elev. 686.30 ft

Surface Water Elev. n/a ft
Stream Bed Elev. n/a ft
Groundwater Elev.:
First Encounter Dry to 10 ft
Upon Completion n/a ft
After Hrs. ft

Description	Elev.	DEPTH (ft)	BLOWS (/6")	UCS Qu (tsf)	MOIST (%)
2.5" ASPHALT, 8.0" CONCRETE	685.40				
CLAY to CLAY LOAM-dark brown, gray & black-soft to very stiff (Fill)			3		
			5	3.5	18
			2	P	
			2		
			2	1.2	25
		-5	1	B	
			3		
			4	1.8	23
			4	B	
			3		
			4	1.8	26
		-10	5	P	
			2		
			3	0.5	25
			3	B	
			1		
			1	0.5	27
		-15	1	P	
			1		
			1	0.8	25
			1	P	
			2		
			2	0.6	27
		-20	3	B	

Description	Elev.	DEPTH (ft)	BLOWS (/6")	UCS Qu (tsf)	MOIST (%)
CLAY to CLAY LOAM-dark brown, gray & black-soft to very stiff (Fill) *(continued)*			2		
			2	1.5	28
			3	P	
			1		
			2	0.5	24
		-25	2	P	
			3		
			4	0.9	24
			5	B	
			2		
			3	2.5	22
		-30	3	P	
			1		
			2	0.3	42
		-35	2	B	
SILTY CLAY-gray-stiff	649.30				
			3		
			4	1.5	25
		-40	6	P	

The Unconfined Compressive Strength (UCS) Failure Mode is indicated by (B-Bulge, S-Shear, P-Penetrometer)
The SPT (N value) is the sum of the last two blow values in each sampling zone (AASHTO T206)

BBS, from 137 (Rev. 8-99)

Z:\PROJECTS\2010\10195 H.W.LOCHNER, IL 7 WILL COOK RD. TO US 45 (FTB 157, 51/10195 BORING LOGS\10195_LOG.GPJ 9/17/12

Geo Services, Inc.
Geotechnical, Environmental & Civil Engineering
805 Aimwell Court, Suite 204
Naperville, Illinois 60565
(630) 355-3586

SOIL BORING LOG

GSI Job No. 10195
Page 2 of 2
Date 3/5/12

ROUTE IL Route 7/U.S. Route 6 (159th St.) DESCRIPTION IL Rte. 7 from Will Cook Rd. to Ravinia Av. LOGGED BY JZ

SECTION 2010-081-R LOCATION SW1/4, SEC. 16, TWP. T36N, RNG. R12E, 3rd PM

COUNTY Cook DRILLING METHOD HSA/ROTARY HAMMER TYPE CME Automatic

STRUCT. NO. 016-D011
Station
BORING NO. SB-13
Station 383+15
Offset 25.00ft Left
Ground Surface Elev. 686.30 ft

Surface Water Elev. n/a ft
Stream Bed Elev. n/a ft
Groundwater Elev.:
First Encounter Dry to 10' ft
Upon Completion n/a ft
After Hrs. ft

Description	Elev.	DEPTH (ft)	BLOWS (/6")	UCS Qu (tsf)	MOIST (%)
SILTY CLAY-gray-stiff *(continued)*					
	644.30				
SILTY SAND & GRAVEL-gray-loose to dense			4		
			4		17
		-45	5		
			4		
			6		17
		-50	8		
			8		
			10		22
		-55	12		
			7		
			7		13
		-60	9		

Description	Elev.	DEPTH (ft)	BLOWS (/6")	UCS Qu (tsf)	MOIST (%)
SILTY SAND & GRAVEL-gray-loose to dense *(continued)*			8		
			8		17
		-65	10		
			7		
			8		15
		-70	7		
			12		
			15		15
	611.30	-75	17		
End Of Boring @ -75.0'. Boring backfilled with cuttings.					
		-80			

The Unconfined Compressive Strength (UCS) Failure Mode is indicated by (B-Bulge, S-Shear, P-Penetrometer)
The SPT (N value) is the sum of the last two blow values in each sampling zone (AASHTO T206)

BBS, from 137 (Rev. 8-99)

Z:\PROJECTS\2010\10195 H.W.LOCHNER, IL 7 WILL COOK RD. TO US 45 (FTB 157, 51/10195 BORING LOGS\10195_LOG.GPJ 9/17/12

\\NASCH1\Chicago2\5186-USB\Struct\dgn\Land Bridges\Land Bridge 2 - 016-D011\016D011-60L72-064-SB.dgn

LOCHNER	USER NAME =	DESIGNED -	REVISED	STATE OF ILLINOIS DEPARTMENT OF TRANSPORTATION	SOIL BORINGS 6 STRUCTURE NO. 016-D011	F.A.P. RTE.	SECTION	COUNTY	TOTAL SHEETS	SHEET NO.
H. W. LOCHNER, INC. 225 WEST WASHINGTON STREET 12 TH FLOOR CHICAGO, ILLINOIS 60606	FILE NAME = 016D011-60L72-064-SB.dgn	CHECKED -	REVISED			351	2010-081-R	COOK	1045	489
	PLOT SCALE =	DRAWN - EF	REVISED					CONTRACT NO. 60L72		
	PLOT DATE =	CHECKED - RH	REVISED		SHEET NO. 64 OF 77 SHEETS		ILLINOIS FED. AID PROJECT			

Geo Services, Inc.
Geotechnical, Environmental & Civil Engineering
805 Aimwell Court, Suite 204
Naperville, Illinois 60565
(630) 355-2866

SOIL BORING LOG

GSI Job No. 10195
Page 1 of 2
Date 3/8/12

ROUTE IL Route 7/U.S. Route 6 (159th St.) DESCRIPTION IL Rte. 7 from Will Cook Rd. to Ravinia Av. LOGGED BY RR

SECTION 2010-081-R LOCATION SW1/4, SEC. 16, TWP. T36N, RNG. R12E, 3rd PM

COUNTY Cook DRILLING METHOD HSA/ROTARY HAMMER TYPE CME Automatic

STRUCT. NO. 016-D011
Station
BORING NO. SB-14
Station 383+93
Offset 17.90ft Right
Ground Surface Elev. 686.70 ft

Surface Water Elev. n/a ft
Stream Bed Elev. n/a ft
Groundwater Elev.:
First Encounter Dry to 10' ft
Upon Completion n/a ft
After ___ Hrs. ___ ft

Description	Elev.	DEPTH (ft)	BLOWS (/6")	UCS Qu (tsf)	MOIST (%)
ASPHALT	686.20				
CLAY to CLAY LOAM-dark brown, gray & black-soft to very stiff (Fill)			4		
			3	2.0	26
			4	P	
			3		
		-5	3	1.1	25
			5	B	
			3		
			5	2.5	23
			5	P	
		-10	ST	1.5	27
				P	
			2		
			3	2.3	24
			4	P	
			1		
		-15	2	0.5	57
			2	P	
			2		
			4	1.8	25
			4	P	
			2		
		-20	1	0.3	34
			2	P	
PEAT-black-loose	666.20		4		
			3		287
			4		
ORGANIC SILTY CLAY-dark gray-very loose	663.70		1		
		-25	2	0.3	49
			2	B	
			2		
			1	0.3	42
			2	B	
SILTY LOAM-gray-loose	658.70		2		
		-30	4		19
			5		
CLAY-gray-stiff	654.70		3		
		-35	5	1.4	22
			7	B	
		-40	5	1.3	22
			7	B	

The Unconfined Compressive Strength (UCS) Failure Mode is indicated by (B-Bulge, S-Shear, P-Penetrometer)
The SPT (N value) is the sum of the last two blow values in each sampling zone (AASHTO T206)

BBS, from 137 (Rev. 8-99)

Z:\PROJECTS\2010\10195 HW LOCHNER, IL 7 WILL COOK RD. TO US 45 (FTB 157, 5/15/195 BORINGS LOGS\10195_LOG.GPJ 9/17/12

Geo Services, Inc.
Geotechnical, Environmental & Civil Engineering
805 Aimwell Court, Suite 204
Naperville, Illinois 60565
(630) 355-2866

SOIL BORING LOG

GSI Job No. 10195
Page 2 of 2
Date 3/8/12

ROUTE IL Route 7/U.S. Route 6 (159th St.) DESCRIPTION IL Rte. 7 from Will Cook Rd. to Ravinia Av. LOGGED BY RR

SECTION 2010-081-R LOCATION SW1/4, SEC. 16, TWP. T36N, RNG. R12E, 3rd PM

COUNTY Cook DRILLING METHOD HSA/ROTARY HAMMER TYPE CME Automatic

STRUCT. NO. 016-D011
Station
BORING NO. SB-14
Station 383+93
Offset 17.90ft Right
Ground Surface Elev. 686.70 ft

Surface Water Elev. n/a ft
Stream Bed Elev. n/a ft
Groundwater Elev.:
First Encounter Dry to 10' ft
Upon Completion n/a ft
After ___ Hrs. ___ ft

Description	Elev.	DEPTH (ft)	BLOWS (/6")	UCS Qu (tsf)	MOIST (%)
CLAY-gray-stiff *(continued)*			3		
		-45	3	1.2	25
			6	B	
SILTY SAND & GRAVEL-gray-medium dense	639.70		8		
			8		14
		-50	8		
			7		
			5		16
		-55	8		
SILTY LOAM-gray-medium dense	629.70		5		
		-60	6		19
			11		
SILTY LOAM-gray-medium dense *(continued)*			12		
		-65	10		3
			7		
			12		
		-70	13		4
			15		
CLAY-gray-stiff	614.70		9		
		-75	11	1.0	28
			15	P	
End Of Boring @ -75.0'. Boring backfilled with cuttings.	611.70	-80			

The Unconfined Compressive Strength (UCS) Failure Mode is indicated by (B-Bulge, S-Shear, P-Penetrometer)
The SPT (N value) is the sum of the last two blow values in each sampling zone (AASHTO T206)

BBS, from 137 (Rev. 8-99)

Z:\PROJECTS\2010\10195 HW LOCHNER, IL 7 WILL COOK RD. TO US 45 (FTB 157, 5/15/195 BORINGS LOGS\10195_LOG.GPJ 9/17/12

\\N4SCH1\Chicago2\5186-USB\Struct\dgn\Land Bridges\Land Bridge 2 - 016-D011\016D011-60L72-065-SB.dgn

LOCHNER	USER NAME =	DESIGNED -	REVISED	STATE OF ILLINOIS DEPARTMENT OF TRANSPORTATION	SOIL BORINGS 7 STRUCTURE NO. 016-D011	F.A.P. RTE.	SECTION	COUNTY	TOTAL SHEETS	SHEET NO.
H. W. LOCHNER, INC. 225 WEST WASHINGTON STREET 12 TH FLOOR CHICAGO, ILLINOIS 60606	FILE NAME = 016D011-60L72-065-SB.dgn	CHECKED -	REVISED			351	2010-081-R	COOK	1045	490
	PLOT SCALE =	DRAWN - EF	REVISED					CONTRACT NO. 60L72		
	PLOT DATE =	CHECKED - RH	REVISED		SHEET NO. 65 OF 77 SHEETS		ILLINOIS FED. AID PROJECT			

Geo Services, Inc.
Geotechnical, Environmental & Civil Engineering
805 Emmerson Court, Suite 204
Naperville, Illinois 60565
(630) 355-3586

SOIL BORING LOG

GSI Job No. 10195
Page 1 of 2
Date 3/5/12

ROUTE IL Route 7/U.S. Route 6 (159th St.) DESCRIPTION IL Rte. 7 from Will Cook Rd. to Ravinia Av. LOGGED BY JZ

SECTION 2010-081-R LOCATION SW1/4, SEC. 16, TWP. T36N, RNG. R12E, 3rd PM

COUNTY Cook DRILLING METHOD HSA/ROTARY HAMMER TYPE CME Automatic

STRUCT. NO. 016-D011
Station
BORING NO. SB-15
Station 384+41
Offset 23.90ft Left
Ground Surface Elev. 686.40 ft

Surface Water Elev. n/a ft
Stream Bed Elev. n/a ft
Groundwater Elev.:
First Encounter Dry to 10' ft
Upon Completion n/a ft
After Hrs. ft

Description	DEPTH (ft)	BLOWS (/6")	UCS Qu (tsf)	MOIST (%)
2.0" ASPHALT, 10.0" CONCRETE				
685.40				
CLAY LOAM-brown, gray & black-soft to very soft (Fill)		3		
		3	2.5	22
		4	P	
		2		
		3	1.5	28
	-5	3	P	
		2		
		3	3.0	18
		3	P	
		2		
		3	1.0	27
	-10	4	P	
		1		
		1	1.8	24
		1	P	
		1		
		1	1.0	23
	-15	2	P	
		2		
		2	1.0	27
		3	P	
		1		
		2	0.3	32
	-20	3	B	
CLAY LOAM-brown, gray & black-soft to very soft (Fill) (continued)		2		
		2	0.4	27
		3	B	
		2		
		3	2.5	23
	-25	3	P	
660.90				
SILTY CLAY to SILTY CLAY LOAM-brown & gray-soft		3		
		3	0.4	24
		3	B	
		1		
		2	0.3	25
	-30	2	P	
654.40				
CLAY-gray-stiff to very stiff		5		
		7	2.0	21
	-35	11	B	
		4		
		5	1.2	21
	-40	7	B	

The Unconfined Compressive Strength (UCS) Failure Mode is indicated by (B-Bulge, S-Shear, P-Penetrometer)
The SPT (N value) is the sum of the last two blow values in each sampling zone (AASHTO T206)
BBS, from 137 (Rev. 8-99)

Z:\PROJECTS\2010\10195 H.W.LOCHNER, IL 7 WILL COOK RD. TO US 45 (FTB 157, 5\10195 BORING LOGS\10195_LOG.GPJ 9/7/12

Geo Services, Inc.
Geotechnical, Environmental & Civil Engineering
805 Emmerson Court, Suite 204
Naperville, Illinois 60565
(630) 355-3586

SOIL BORING LOG

GSI Job No. 10195
Page 2 of 2
Date 3/5/12

ROUTE IL Route 7/U.S. Route 6 (159th St.) DESCRIPTION IL Rte. 7 from Will Cook Rd. to Ravinia Av. LOGGED BY JZ

SECTION 2010-081-R LOCATION SW1/4, SEC. 16, TWP. T36N, RNG. R12E, 3rd PM

COUNTY Cook DRILLING METHOD HSA/ROTARY HAMMER TYPE CME Automatic

STRUCT. NO. 016-D011
Station
BORING NO. SB-15
Station 384+41
Offset 23.90ft Left
Ground Surface Elev. 686.40 ft

Surface Water Elev. n/a ft
Stream Bed Elev. n/a ft
Groundwater Elev.:
First Encounter Dry to 10' ft
Upon Completion n/a ft
After Hrs. ft

Description	DEPTH (ft)	BLOWS (/6")	UCS Qu (tsf)	MOIST (%)
CLAY-gray-stiff to very stiff (continued)				
644.40				
SILTY SAND & GRAVEL-gray-medium dense		4		
		5		22
	-45	5		
		7		
		10		15
	-50	13		
		8		
		9		15
	-55	12		
		8		
		8		19
	-60	11		
SILTY SAND & GRAVEL-gray-medium dense (continued)		10		
		13		10
	-65	15		
619.40				
CLAY-gray-stiff		7		
		9	1.0	24
	-70	11	P	
		7		
		7	1.1	25
611.40	-75	8	B	
End Of Boring @ -75.0'. Boring backfilled with cuttings.	-80			

The Unconfined Compressive Strength (UCS) Failure Mode is indicated by (B-Bulge, S-Shear, P-Penetrometer)
The SPT (N value) is the sum of the last two blow values in each sampling zone (AASHTO T206)
BBS, from 137 (Rev. 8-99)

Z:\PROJECTS\2010\10195 H.W.LOCHNER, IL 7 WILL COOK RD. TO US 45 (FTB 157, 5\10195 BORING LOGS\10195_LOG.GPJ 9/7/12

\\MASCH1\Chicago2\5186-USS\Struct\dgn\Land Bridges\Land Bridge 2 - 016-D011\016D011-60L72-066-SB.dgn

LOCHNER	USER NAME =	DESIGNED -	REVISED	STATE OF ILLINOIS DEPARTMENT OF TRANSPORTATION	SOIL BORINGS 8 STRUCTURE NO. 016-D011	F.A.P. RTE.	SECTION	COUNTY	TOTAL SHEETS	SHEET NO.
H. W. LOCHNER, INC. 225 WEST WASHINGTON STREET 12 TH FLOOR CHICAGO, ILLINOIS 60606	FILE NAME = 016D011-60L72-066-SB.dgn	CHECKED -	REVISED			351	2010-081-R	COOK	1045	491
	PLOT SCALE =	DRAWN - EF	REVISED			CONTRACT NO. 60L72				
	PLOT DATE =	CHECKED - RH	REVISED		SHEET NO. 66 OF 77 SHEETS	ILLINOIS FED. AID PROJECT				

Geo Services, Inc.
Geotechnical, Environmental & Civil Engineering
805 Aimwell Court, Suite 204
Naperville, Illinois 60565
(630) 355-2868

SOIL BORING LOG

GSI Job No. 10195
Page 1 of 2
Date 3/8/12

ROUTE IL Route 7/U.S. Route 6 (159th St.) DESCRIPTION IL Rte. 7 from Will Cook Rd. to Ravinia Av. LOGGED BY JZ

SECTION 2010-081-R LOCATION SW1/4, SEC. 16, TWP. T36N, RNG. R12E, 3rd PM

COUNTY Cook DRILLING METHOD HSA/ROTARY HAMMER TYPE CME Automatic

STRUCT. NO. 016-D011
Station
BORING NO. SB-16
Station 384+77
Offset 16.10ft Right
Ground Surface Elev. 686.70 ft

Surface Water Elev. n/a ft
Stream Bed Elev. n/a ft
Groundwater Elev.:
First Encounter Dry to 10 ft
Upon Completion n/a ft
After ___ Hrs. ___ ft

Description	Elev.	DEPTH (ft)	BLOWS (/6")	UCS Qu (tsf)	MOIST (%)
8.0" ASPHALT, 4.0" CRUSHED STONE	685.70				
CLAY to CLAY LOAM-dark brown, gray & black-medium stiff to very stiff (Fill)			7		
			5	2.1	21
			8	B	
			7		
			7	3.7	17
		-5	8	B	
			4		
			4	0.7	24
			4	B	
ORGANIC SILTY CLAY-brown & black-very loose	678.70		1		
			1		66
		-10	1		
PEAT-dark brown & black-very loose	676.20		0		
			0		426
			0		
			0		
			0		369
		-15	0		
			0		
			0		141
			0		
			1		
			1		205
		-20	1		
SILTY CLAY LOAM-gray-loose to medium dense	666.20		4		
			3		36
			3		
			4		
			5		38
		-25	5		
			5		
			6	0.5	29
			7	P	
CLAY-gray-medium stiff	658.70		5		
			7	0.8	23
		-30	9	B	
			4		
			5	0.7	27
		-35	5	B	
			5		
			6		16
		-40	8		
SILTY SAND & GRAVEL-gray-medium dense to dense	649.70				

The Unconfined Compressive Strength (UCS) Failure Mode is indicated by (B-Bulge, S-Shear, P-Penetrometer)
The SPT (N value) is the sum of the last two blow values in each sampling zone (AASHTO T206)
BBS, from 137 (Rev. 8-99)

Geo Services, Inc.
Geotechnical, Environmental & Civil Engineering
805 Aimwell Court, Suite 204
Naperville, Illinois 60565
(630) 355-2868

SOIL BORING LOG

GSI Job No. 10195
Page 2 of 2
Date 3/8/12

ROUTE IL Route 7/U.S. Route 6 (159th St.) DESCRIPTION IL Rte. 7 from Will Cook Rd. to Ravinia Av. LOGGED BY JZ

SECTION 2010-081-R LOCATION SW1/4, SEC. 16, TWP. T36N, RNG. R12E, 3rd PM

COUNTY Cook DRILLING METHOD HSA/ROTARY HAMMER TYPE CME Automatic

STRUCT. NO. 016-D011
Station
BORING NO. SB-16
Station 384+77
Offset 16.10ft Right
Ground Surface Elev. 686.70 ft

Surface Water Elev. n/a ft
Stream Bed Elev. n/a ft
Groundwater Elev.:
First Encounter Dry to 10' ft
Upon Completion n/a ft
After ___ Hrs. ___ ft

Description	Elev.	DEPTH (ft)	BLOWS (/6")	UCS Qu (tsf)	MOIST (%)
SILTY SAND & GRAVEL-gray-medium dense to dense *(continued)*					
			5		
			6		15
		-45	6		
			5		
			3		16
		-50	8		
			11		
			17		14
		-55	18		
CLAY-gray-very stiff	629.70		10		
			16	3.3	18
		-60	16	B	
CLAY-gray-very stiff *(continued)*					
			11		
			11		13
		-65	13		
			12		
			11		16
		-70	15		
			10		
			13		16
		-75	15		
End Of Boring @ -75.0'. Boring backfilled with cuttings.	611.70	-80			

The Unconfined Compressive Strength (UCS) Failure Mode is indicated by (B-Bulge, S-Shear, P-Penetrometer)
The SPT (N value) is the sum of the last two blow values in each sampling zone (AASHTO T206)
BBS, from 137 (Rev. 8-99)

Z:\PROJECTS\2010\10195 H.W.LOCHNER, IL 7 WILL COOK RD. TO US 45 (FTB 157, 5\10195 BORING LOGS\10195_LOG.GPJ 9/17/12

\\WMSCHI\Chicago2\5186-JSE\Struct\dgn\Land Bridges\Land Bridge 2 - 016-D011\016D011-60L72-067-SB.dgn

LOCHNER	USER NAME =	DESIGNED -	REVISED	STATE OF ILLINOIS DEPARTMENT OF TRANSPORTATION	SOIL BORINGS 9 STRUCTURE NO. 016-D011	F.A.P. RTE.	SECTION	COUNTY	TOTAL SHEETS	SHEET NO.
H. W. LOCHNER, INC. 225 WEST WASHINGTON STREET 12 TH FLOOR CHICAGO, ILLINOIS 60606	FILE NAME = 016D011-60L72-067-SB.dgn	CHECKED -	REVISED			351	2010-081-R	COOK	1045	492
	PLOT SCALE =	DRAWN - EF	REVISED					CONTRACT NO. 60L72		
	PLOT DATE =	CHECKED - RH	REVISED		SHEET NO. 67 OF 77 SHEETS		ILLINOIS	FED. AID PROJECT		

Geo Services, Inc.
Geotechnical, Environmental & Civil Engineering
805 Aimhurst Court, Suite 204
Naperville, Illinois 60565
(630) 355-7868

SOIL BORING LOG

GSI Job No. 10195
Page 1 of 2
Date 3/5/12

ROUTE IL Route 7/U.S. Route 6 (159th St.) DESCRIPTION IL Rte. 7 from Will Cook Rd. to Ravinia Av. LOGGED BY RR

SECTION 2010-081-R LOCATION SW1/4, SEC. 16, TWP. T36N, RNG. R12E, 3rd PM

COUNTY Cook DRILLING METHOD HSA/ROTARY HAMMER TYPE CME Automatic

STRUCT. NO. 016-D011
Station
BORING NO. SB-17
Station 385+18
Offset 23.30ft Left
Ground Surface Elev. 686.70 ft

Surface Water Elev. n/a ft
Stream Bed Elev. n/a ft
Groundwater Elev.:
First Encounter Dry to 10 ft
Upon Completion n/a ft
After ___ Hrs. ___ ft

Description	Elev.	DEPTH (ft)	BLOWS (/6")	UCS Qu (tsf)	MOIST (%)
3.0" ASPHALT, 9.0" CONCRETE	685.70				
CLAY to CLAY LOAM-dark brown & gray-stiff to very stiff (Fill)			4		
			3	2.3	22
			5	P	
			2		
		-5	3	1.5	24
			5	P	
			2		
			2	1.1	30
			4	B	
ORGANIC CLAY-dark gray (Fill)	678.70		ST		
					83
		-10			
CLAY to CLAY LOAM-brown & gray-stiff (Fill)	676.20		2		
			3	1.0	23
			5	P	
			2		
			2	1.0	25
		-15	2	P	
			2		
			3	1.2	19
			4	B	
			2		
		-20	2	1.0	24
			2	B	
SILTY CLAY-dark gray-soft	666.20		1		
			2	0.4	28
			1	B	
CLAY-gray-stiff	663.70		2		
			3	1.1	25
		-25	4	B	
			1		
			4	1.3	19
			4	B	
			4		
			5	1.3	17
		-30	5	B	
SILT-gray-medium dense	654.70		6		
			9		17
		-35	10		
CLAY-gray-stiff	649.70		5		
			5	1.4	26
		-40	7	B	

The Unconfined Compressive Strength (UCS) Failure Mode is indicated by (B-Bulge, S-Shear, P-Penetrometer)
The SPT (N value) is the sum of the last two blow values in each sampling zone (AASHTO T206)

BBS, from 137 (Rev. 8-99)

Geo Services, Inc.
Geotechnical, Environmental & Civil Engineering
805 Aimhurst Court, Suite 204
Naperville, Illinois 60565
(630) 355-7868

SOIL BORING LOG

GSI Job No. 10195
Page 2 of 2
Date 3/5/12

ROUTE IL Route 7/U.S. Route 6 (159th St.) DESCRIPTION IL Rte. 7 from Will Cook Rd. to Ravinia Av. LOGGED BY RR

SECTION 2010-081-R LOCATION SW1/4, SEC. 16, TWP. T36N, RNG. R12E, 3rd PM

COUNTY Cook DRILLING METHOD HSA/ROTARY HAMMER TYPE CME Automatic

STRUCT. NO. 016-D011
Station
BORING NO. SB-17
Station 385+18
Offset 23.30ft Left
Ground Surface Elev. 686.70 ft

Surface Water Elev. n/a ft
Stream Bed Elev. n/a ft
Groundwater Elev.:
First Encounter Dry to 10' ft
Upon Completion n/a ft
After ___ Hrs. ___ ft

Description	Elev.	DEPTH (ft)	BLOWS (/6")	UCS Qu (tsf)	MOIST (%)
CLAY-gray-stiff *(continued)*	644.70				
SILTY SAND & GRAVEL-gray-medium dense			8		
			7		15
		-45	8		
			11		
			10		15
		-50	12		
SAND & GRAVEL-gray-medium dense to dense	634.70		14		
			16		9
		-55	20		
SAND & GRAVEL-gray-medium dense to dense *(continued)*	619.70		17		
			11		11
		-65	18		
SILTY SAND & GRAVEL-gray-dense			16		
			21		9
		-70	20		
			17		
			18		15
	611.70	-75	21		
End Of Boring @ -75.0'. Boring backfilled with cuttings.					
			23		
			19		11
		-80	12		

The Unconfined Compressive Strength (UCS) Failure Mode is indicated by (B-Bulge, S-Shear, P-Penetrometer)
The SPT (N value) is the sum of the last two blow values in each sampling zone (AASHTO T206)

BBS, from 137 (Rev. 8-99)

Z:\PROJECTS\2010\10195 IL 7 WILL COOK RD. TO US 45 (FTB 157)\10195 BORING LOGS\10195_LOG.GPJ 9/17/12

\\M4SCH1\Chicago2\5186-USGS\Struct\dgn\Land Bridges\Land Bridge 2 - 016-D011\016D011-60L72-068-SB.dgn

LOCHNER	USER NAME =	DESIGNED -	REVISED	STATE OF ILLINOIS DEPARTMENT OF TRANSPORTATION	SOIL BORINGS 10 STRUCTURE NO. 016-D011	F.A.P. RTE.	SECTION	COUNTY	TOTAL SHEETS	SHEET NO.
H. W. LOCHNER, INC. 225 WEST WASHINGTON STREET 12 TH FLOOR CHICAGO, ILLINOIS 60606	FILE NAME = 016D011-60L72-068-SB.dgn	CHECKED -	REVISED			351	2010-081-R	COOK	1045	493
	PLOT SCALE =	DRAWN - EF	REVISED			CONTRACT NO. 60L72				
	PLOT DATE =	CHECKED - RH	REVISED		SHEET NO. 68 OF 77 SHEETS	ILLINOIS FED. AID PROJECT				

Geo Services, Inc.
Geotechnical, Environmental & Civil Engineering
805 Emmitt Court, Suite 204
Naperville, Illinois 60565
(630) 355-2858

SOIL BORING LOG

GSI Job No. 10195
Page 1 of 2
Date 3/8/12

ROUTE IL Route 7/U.S. Route 6 (159th St.) DESCRIPTION IL Rte. 7 from Will Cook Rd. to Ravinia Av. LOGGED BY JZ

SECTION 2010-081-R LOCATION SW1/4, SEC. 16, TWP. T36N, RNG. R12E, 3rd PM

COUNTY Cook DRILLING METHOD HSA/ROTARY HAMMER TYPE CME Automatic

STRUCT. NO. 016-D011
Station
BORING NO. SB-18
Station 385+60
Offset 14.80ft Right
Ground Surface Elev. 686.80 ft

Surface Water Elev. n/a ft
Stream Bed Elev. n/a ft
Groundwater Elev.:
First Encounter Dry to 10 ft
Upon Completion n/a ft
After ___ Hrs. ___ ft

Description	Elev.	DEPTH (ft)	BLOWS (/6")	UCS Qu (tsf)	MOIST (%)
ASPHALT	686.05				
CLAY TO CLAY LOAM-brown, gray & black-soft to very stiff (Fill)			5		
			6	3.8	20
			6	P	
			1		
			2	1.0	26
		-5	2	P	
			1		
			2	0.8	32
			2	P	
			1		
			1	0.5	27
		-10	1	P	
			0		
			O	0.3	32
			0	P	
PEAT-black-very loose	673.80				
			1		
			1		207
		-15	0		
CLAYEY SAND & GRAVEL-gray-loose	671.30				
			2		
			2		23
			3		
CLAY-gray-stiff to very stiff	668.80				
			2		
			4	1.5	23
		-20	4	B	
CLAY-gray-stiff to very stiff *(continued)*			3		
			4	2.8	17
			4	B	
			5		
			6	1.6	21
		-25	8	B	
			6		
			8	1.1	21
			10	B	
SILT-gray-medium dense	658.80				
			6		
			8		19
		-30	9		
SILTY SAND & GRAVEL-gray-medium dense	654.80				
			5		
			6		14
		-35	6		
			6	1.6	21
		-40	8	B	

The Unconfined Compressive Strength (UCS) Failure Mode is indicated by (B-Bulge, S-Shear, P-Penetrometer)
The SPT (N value) is the sum of the last two blow values in each sampling zone (AASHTO T206)

BBS, from 137 (Rev. 8-99)

Geo Services, Inc.
Geotechnical, Environmental & Civil Engineering
805 Emmitt Court, Suite 204
Naperville, Illinois 60565
(630) 355-2858

SOIL BORING LOG

GSI Job No. 10195
Page 2 of 2
Date 3/8/12

ROUTE IL Route 7/U.S. Route 6 (159th St.) DESCRIPTION IL Rte. 7 from Will Cook Rd. to Ravinia Av. LOGGED BY JZ

SECTION 2010-081-R LOCATION SW1/4, SEC. 16, TWP. T36N, RNG. R12E, 3rd PM

COUNTY Cook DRILLING METHOD HSA/ROTARY HAMMER TYPE CME Automatic

STRUCT. NO. 016-D011
Station
BORING NO. SB-18
Station 385+60
Offset 14.80ft Right
Ground Surface Elev. 686.80 ft

Surface Water Elev. n/a ft
Stream Bed Elev. n/a ft
Groundwater Elev.:
First Encounter Dry to 10' ft
Upon Completion n/a ft
After ___ Hrs. ___ ft

Description	Elev.	DEPTH (ft)	BLOWS (/6")	UCS Qu (tsf)	MOIST (%)
SILTY SAND & GRAVEL-gray-medium dense *(continued)*	644.80				
SAND-gray-medium dense			5		
			6		20
		-45	6		
SANDY LOAM-gray-medium dense	639.80				
			4		
			5		20
		-50	6		
FINE SAND-gray-medium dense	634.80				
			5		
			5		21
		-55	5		
CLAY LOAM-gray-stiff to very stiff	629.80				
			5		
			6	1.1	19
		-60	6	B	
CLAY LOAM-gray-stiff to very stiff *(continued)*			6		
			7	2.2	24
		-65	8	B	
SILTY CLAY LOAM-gray-medium dense	619.80				
			8		
			11	2.1	18
		-70	13	B	
CLAY LOAM-gray-hard	614.80				
			10		
			12	4.5	10
		-75	15	P	
End Of Boring @ -75.0'. Boring backfilled with cuttings.	611.80				

The Unconfined Compressive Strength (UCS) Failure Mode is indicated by (B-Bulge, S-Shear, P-Penetrometer)
The SPT (N value) is the sum of the last two blow values in each sampling zone (AASHTO T206)

BBS, from 137 (Rev. 8-99)

Z:\PROJECTS\2010\10195 H.W.LOCHNER, IL 7 WILL COOK RD. TO US 45 (PTB 157, 5)\10195 BORING LOGS\10195_LOG.GPJ 8/17/12

\\MASCHI\Chicago2\5106-US6\Struct\dgn\Land Bridges\Land Bridge 2 - 016-D011\016D011-60L72-069-SB.dgn

LOCHNER	USER NAME =	DESIGNED -	REVISED	STATE OF ILLINOIS DEPARTMENT OF TRANSPORTATION	SOIL BORINGS 11 STRUCTURE NO. 016-D011	F.A.P. RTE.	SECTION	COUNTY	TOTAL SHEETS	SHEET NO.
H. W. LOCHNER, INC. 225 WEST WASHINGTON STREET 12 TH FLOOR CHICAGO, ILLINOIS 60606	FILE NAME = 016D011-60L72-069-SB.dgn	CHECKED -	REVISED			351	2010-081-R	COOK	1045	494
	PLOT SCALE =	DRAWN - EF	REVISED			CONTRACT NO. 60L72				
	PLOT DATE =	CHECKED - RH	REVISED		SHEET NO. 69 OF 77 SHEETS	ILLINOIS FED. AID PROJECT				

Geo Services, Inc.
Geotechnical, Environmental & Civil Engineering
805 Aimhurst Court, Suite 204
Naperville, Illinois 60565
(630) 355-3588

GSI Job No. 10195

SOIL BORING LOG

Page 1 of 2

Date 3/5/12

ROUTE IL Route 7/U.S. Route 6 (159th St.) DESCRIPTION IL Rte. 7 from Will Cook Rd. to Ravinia Av LOGGED BY RR

SECTION 2010-081-R LOCATION SW1/4, SEC. 16, TWP. T36N, RNG. R12E, 3rd PM

COUNTY Cook DRILLING METHOD HSA/ROTARY HAMMER TYPE CME Automatic

STRUCT. NO. 016-D011
Station
BORING NO. SB-19
Station 386+02
Offset 22.40ft Left
Ground Surface Elev. 686.70 ft

Surface Water Elev. n/a ft
Stream Bed Elev. n/a ft
Groundwater Elev.:
First Encounter 675.7 ft ▼
Upon Completion n/a ft
After ___ Hrs. ___ ft

Description	Elev.	DEPTH (ft)	BLOWS (/6")	UCS Qu (tsf)	MOIST (%)
3.0" ASPHALT, 12.0" CONCRETE	685.30				
TOPSOIL-black (Fill)	683.70		3		
			4	1.5	29
			6	P	
CLAYEY GRAVEL & STONE-black-loose (Fill)	681.20		2		
		-5	3		18
			4		
CLAY LOAM-brown & gray-stiff (Fill)	678.70		2		
			2	1.5	26
			3	P	
SAND & GRAVEL-brown & gray	676.20		ST		13
		-10			
CLAY-gray-soft to very stiff ▼			2		
			2	0.2	24
			2	B	
			2		
			3	1.3	21
		-15	5	B	
			3		
			5	1.6	20
			8	B	
			4		
			5	2.0	21
		-20	9	B	
CLAY-gray-soft to very stiff (continued)			4		
			6	1.8	21
			7	B	
			3		
			4	0.6	29
		-25	5	B	
SAND & GRAVEL-gray-medium dense	661.20		4		
			6		13
			8		
CLAYEY SAND & GRAVEL-gray-loose to dense	658.70		7		
			6		31
		-30	8		
			4		
			3		14
		-35	4		
			50		
			20		13
		-40	24		

The Unconfined Compressive Strength (UCS) Failure Mode is indicated by (B-Bulge, S-Shear, P-Penetrometer)
The SPT (N value) is the sum of the last two blow values in each sampling zone (AASHTO T206)

BBS, from 137 (Rev. 8-99)

Geo Services, Inc.
Geotechnical, Environmental & Civil Engineering
805 Aimhurst Court, Suite 204
Naperville, Illinois 60565
(630) 355-3588

GSI Job No. 10195

SOIL BORING LOG

Page 2 of 2

Date 3/5/12

ROUTE IL Route 7/U.S. Route 6 (159th St.) DESCRIPTION IL Rte. 7 from Will Cook Rd. to Ravinia Av. LOGGED BY RR

SECTION 2010-081-R LOCATION SW1/4, SEC. 16, TWP. T36N, RNG. R12E, 3rd PM

COUNTY Cook DRILLING METHOD HSA/ROTARY HAMMER TYPE CME Automatic

STRUCT. NO. 016-D011
Station
BORING NO. SB-19
Station 386+02
Offset 22.40ft Left
Ground Surface Elev. 686.70 ft

Surface Water Elev. n/a ft
Stream Bed Elev. n/a ft
Groundwater Elev.:
First Encounter 675.7 ft ▼
Upon Completion n/a ft
After ___ Hrs. ___ ft

Description	Elev.	DEPTH (ft)	BLOWS (/6")	UCS Qu (tsf)	MOIST (%)
CLAYEY SAND & GRAVEL-gray-loose to dense (continued)			11		
			10		9
		-45	11		
SILTY FINE SAND-gray-medium dense	639.70		11		
			10		15
		-50	11		
			8		
			10		17
		-55	15		
SAND-gray-medium dense	629.70		7		
			10		20
		-60	12		
SAND-gray-medium dense (continued)	624.70		11		
			16	2.7	20
		-65	21	B	
CLAY-gray-very stiff	619.70		9		
			13		18
		-70	14		
CLAYEY SAND & GRAVEL-gray-medium dense to dense	611.70		16		
			21		10
		-75	23		
End Of Boring @ -75.0'. Boring backfilled with cuttings.		-80			

The Unconfined Compressive Strength (UCS) Failure Mode is indicated by (B-Bulge, S-Shear, P-Penetrometer)
The SPT (N value) is the sum of the last two blow values in each sampling zone (AASHTO T206)

BBS, from 137 (Rev. 8-99)

Z:\PROJECTS\2010\10195 H.W. LOCHNER, IL 7 WILL COOK RD. TO US 45 (FTB 157, 5/10/195 BORING LOGS\10195_LOG.GPJ 9/17/12

\\N4SCH1\Chicago2\5186-USGS\Struct\dgn\Land Bridges\Land Bridge 2 - 016-D011\016D011-60L72-070-SB.dgn

LOCHNER	USER NAME =	DESIGNED -	REVISED	STATE OF ILLINOIS DEPARTMENT OF TRANSPORTATION	SOIL BORINGS 12 STRUCTURE NO. 016-D011	F.A.P. RTE.	SECTION	COUNTY	TOTAL SHEETS	SHEET NO.
H. W. LOCHNER, INC. 225 WEST WASHINGTON STREET 12 TH FLOOR CHICAGO, ILLINOIS 60606	FILE NAME = 016D011-60L72-070-SB.dgn	CHECKED -	REVISED			351	2010-081-R	COOK	1045	495
	PLOT SCALE =	DRAWN - EF	REVISED			CONTRACT NO. 60L72				
	PLOT DATE =	CHECKED - RH	REVISED		SHEET NO. 70 OF 77 SHEETS	ILLINOIS FED. AID PROJECT				

Geo Services, Inc.
Geotechnical, Environmental & Civil Engineering
805 Aimhurst Court, Suite 204
Naperville, Illinois 60565
(630) 355-2866

SOIL BORING LOG

GSI Job No. 10195
Page 1 of 2
Date 3/8/12

ROUTE IL Route 7/U.S. Route 6 (159th St.) DESCRIPTION IL Rte. 7 from Will Cook Rd. to Ravinia Av. LOGGED BY TZ

SECTION 2010-081-R LOCATION SW1/4, SEC. 16, TWP. T36N, RNG. R12E, 3rd PM

COUNTY Cook DRILLING METHOD HSA/ROTARY HAMMER TYPE CME Automatic

STRUCT. NO. 016-D011
Station
BORING NO. SB-20
Station 386+45
Offset 13.70ft Right
Ground Surface Elev. 686.90 ft

Surface Water Elev. n/a ft
Stream Bed Elev. n/a ft
Groundwater Elev.:
First Encounter 680.9 ft ▼
Upon Completion n/a ft
After ___ Hrs. ___ ft

Description	Elev.	DEPTH (ft)	BLOWS (/6")	UCS Qu (tsf)	MOIST (%)
6.0" ASPHALT, 6.0" CRUSHED STONE	685.90				
CLAY LOAM-dark brown, gray & black-stiff to hard (Fill)			3		
			5	4.0	23
			6	P	
			2		
			2	2.0	23
		-5	3	P	
		▼			
			0		
			0	1.0	27
			1	P	
SILTY LOAM-gray-very loose	678.90				
			0		
			1		23
		-10	1		
CLAY-gray-stiff to very stiff	676.40				
			3		
			3	1.9	22
			3	B	
			4		
			5	2.4	21
		-15	5	B	
			2		
			3	1.3	23
			3	B	
			2		
			3	1.5	23
		-20	4	P	
CLAY-gray-stiff to very stiff (continued)	666.40				
CLAYEY SAND & GRAVEL-gray-loose to medium dense			4		
			4		15
			5		
			2		
			3		18
		-25	3		
			6		
			7		16
			9		
SAND & GRAVEL-gray-dense	658.90				
			5		
			6		13
		-30	6		
			6		
			8		11
		-35	6		
			8		
			9		25
		-40	10		

The Unconfined Compressive Strength (UCS) Failure Mode is indicated by (B-Bulge, S-Shear, P-Penetrometer)
The SPT (N value) is the sum of the last two blow values in each sampling zone (AASHTO T206)

BBS, from 137 (Rev. 8-99)

Geo Services, Inc.
Geotechnical, Environmental & Civil Engineering
805 Aimhurst Court, Suite 204
Naperville, Illinois 60565
(630) 355-2866

SOIL BORING LOG

GSI Job No. 10195
Page 2 of 2
Date 3/8/12

ROUTE IL Route 7/U.S. Route 6 (159th St.) DESCRIPTION IL Rte. 7 from Will Cook Rd. to Ravinia Av. LOGGED BY TZ

SECTION 2010-081-R LOCATION SW1/4, SEC. 16, TWP. T36N, RNG. R12E, 3rd PM

COUNTY Cook DRILLING METHOD HSA/ROTARY HAMMER TYPE CME Automatic

STRUCT. NO. 016-D011
Station
BORING NO. SB-20
Station 386+45
Offset 13.70ft Right
Ground Surface Elev. 686.90 ft

Surface Water Elev. n/a ft
Stream Bed Elev. n/a ft
Groundwater Elev.:
First Encounter 680.9 ft ▼
Upon Completion n/a ft
After ___ Hrs. ___ ft

Description	Elev.	DEPTH (ft)	BLOWS (/6")	UCS Qu (tsf)	MOIST (%)
SAND & GRAVEL-gray-dense (continued)					
			5		
			6		10
		-45	9		
SAND-gray-loose to medium dense	639.90				
			3		
			3		21
		-50	4		
			4		
			5		25
		-55	7		
CLAYEY SAND & GRAVEL-gray-dense	629.90				
			14		
			19		13
		-60	21		
CLAYEY SAND & GRAVEL-gray-dense (continued)	624.90				
SILTY CLAY LOAM-gray-medium dense			7		
			9		19
		-65	13		
			6		
			10	2.9	19
		-70	14	B	
SILT-gray-dense	614.90				
			10		
			18		22
		611.90 -75	21		
End Of Boring @ -75.0'. Boring backfilled with cuttings.					

The Unconfined Compressive Strength (UCS) Failure Mode is indicated by (B-Bulge, S-Shear, P-Penetrometer)
The SPT (N value) is the sum of the last two blow values in each sampling zone (AASHTO T206)

BBS, from 137 (Rev. 8-99)

Z:\PROJECTS\2010\10195 H.W.LOCHNER, IL 7 WILL COOK RD. TO US 45 (FTB 157, 51/10195 BORING LOGS\10195_LOG.GPJ 9/17/12

\\M4SCH1\Chicago2\5186-USGS\Struct\dgn\Land Bridges\Land Bridge 2 - 016-D011\016D011-60L72-071-SB.dgn

LOCHNER	USER NAME =	DESIGNED -	REVISED	STATE OF ILLINOIS DEPARTMENT OF TRANSPORTATION	SOIL BORINGS 13 STRUCTURE NO. 016-D011	F.A.P. RTE.	SECTION	COUNTY	TOTAL SHEETS	SHEET NO.
H. W. LOCHNER, INC. 225 WEST WASHINGTON STREET 12 TH FLOOR CHICAGO, ILLINOIS 60606	FILE NAME = 016D011-60L72-071-SB.dgn	CHECKED -	REVISED			351	2010-081-R	COOK	1045	496
	PLOT SCALE =	DRAWN - EF	REVISED					CONTRACT NO. 60L72		
	PLOT DATE =	CHECKED - RH	REVISED		SHEET NO. 71 OF 77 SHEETS		ILLINOIS FED. AID PROJECT			

Geo Services, Inc.
Geotechnical, Environmental & Civil Engineering
805 Ammersil Court, Suite 204
Naperville, Illinois 60565
(630) 355-2586

SOIL BORING LOG

GSI Job No. 10195
Page 1 of 2
Date 3/1/12

ROUTE IL Route 7/U.S. Route 6 (159th St.) DESCRIPTION IL Rte. 7 from Will Cook Rd. to Ravinia Av LOGGED BY RR

SECTION 2010-081-R LOCATION SW1/4, SEC. 16, TWP. T36N, RNG. R12E, 3rd PM

COUNTY Cook DRILLING METHOD HSA/ROTARY HAMMER TYPE CME Automatic

STRUCT. NO. 016-D011
Station
BORING NO. SB-21
Station 387+73
Offset 22.80ft Left
Ground Surface Elev. 686.30 ft

Surface Water Elev. n/a ft
Stream Bed Elev. n/a ft
Groundwater Elev.:
First Encounter Dry to 10' ft
Upon Completion n/a ft
After ___ Hrs. ___ ft

Description	Elev.	DEPTH (ft)	BLOWS (/6")	UCS Qu (tsf)	MOIST (%)
ASPHALT	685.40				
CLAY to CLAY LOAM-dark brown, gray & black-stiff to very stiff (Fill)			7		
			3	2.3	23
			5	P	
			2		
			2	2.2	21
		-5	3	B	
			4		
			4	2.4	23
			4	B	
			2		
			2	2.3	22
		-10	3	P	
			1		
			1	1.0	37
			2	P	
			2		
			1	1.0	34
		-15	2	P	
PEAT-dark gray-very loose	670.80				
			1		
			2		120
			2		
CLAY-gray-stiff	668.30				
			5		
		-20	3	1.3	23
			2	P	
CLAY-gray-stiff *(continued)*					
			3		
			6	1.8	21
			8	B	
			3		
			4	1.8	23
		-25	6	B	
			4		
			4	1.2	18
			5	B	
			3		
			4	1.7	22
		-30	6	B	
SILTY SAND & GRAVEL-gray-medium dense to dense	654.30				
			6		
			8		15
		-35	9		
			5		
		-40	7		20
			5		

The Unconfined Compressive Strength (UCS) Failure Mode is indicated by (B-Bulge, S-Shear, P-Penetrometer)
The SPT (N value) is the sum of the last two blow values in each sampling zone (AASHTO T206)
BBS, from 137 (Rev. 8-99)

Geo Services, Inc.
Geotechnical, Environmental & Civil Engineering
805 Ammersil Court, Suite 204
Naperville, Illinois 60565
(630) 355-2586

SOIL BORING LOG

GSI Job No. 10195
Page 2 of 2
Date 3/1/12

ROUTE IL Route 7/U.S. Route 6 (159th St.) DESCRIPTION IL Rte. 7 from Will Cook Rd. to Ravinia Av. LOGGED BY RR

SECTION 2010-081-R LOCATION SW1/4, SEC. 16, TWP. T36N, RNG. R12E, 3rd PM

COUNTY Cook DRILLING METHOD HSA/ROTARY HAMMER TYPE CME Automatic

STRUCT. NO. 016-D011
Station
BORING NO. SB-21
Station 387+73
Offset 22.80ft Left
Ground Surface Elev. 686.30 ft

Surface Water Elev. n/a ft
Stream Bed Elev. n/a ft
Groundwater Elev.:
First Encounter Dry to 10' ft
Upon Completion n/a ft
After ___ Hrs. ___ ft

Description	Elev.	DEPTH (ft)	BLOWS (/6")	UCS Qu (tsf)	MOIST (%)
SILTY SAND & GRAVEL-gray-medium dense to dense *(continued)*					
			12		
			10		16
		-45	10		
			11		
			10		11
		-50	12		
			15		
			13		14
		-55	17		
SILTY SAND-gray-medium dense	629.30				
			8		
			9		17
		-60	8		
SILTY SAND-gray-medium dense *(continued)*	624.30				
FINE SAND-gray-medium dense			12		
			13		16
		-65	16		
	619.30				
SILT-gray-medium dense			11		
			13		21
		-70	13		
SAND-gray-medium dense	614.30				
			11		
			11		19
	611.30	-75	13		
End Of Boring @ -75.0'. Boring backfilled with cuttings.					
		-80			

The Unconfined Compressive Strength (UCS) Failure Mode is indicated by (B-Bulge, S-Shear, P-Penetrometer)
The SPT (N value) is the sum of the last two blow values in each sampling zone (AASHTO T206)
BBS, from 137 (Rev. 8-99)

Z:\PROJECTS\2010\10195 H.W.LOCHNER, IL 7 WILL COOK RD. TO US 45 (PTB 157, 5)\0195 B-DRING LOGS\10195_LOG.GPJ 9/7/12

\\MASCH1\Chicago2\5186-USS\Struct\dgn\Lend Bridges\Lend Bridge 2 - 016-D011\016D011-60L72-072-SB.dgn

LOCHNER	USER NAME =	DESIGNED -	REVISED
H. W. LOCHNER, INC.	FILE NAME = 016D011-60L72-072-SB.dgn	CHECKED -	REVISED
225 WEST WASHINGTON STREET	PLOT SCALE =	DRAWN - EF	REVISED
12 TH FLOOR CHICAGO, ILLINOIS 60606	PLOT DATE =	CHECKED - RH	REVISED

STATE OF ILLINOIS
DEPARTMENT OF TRANSPORTATION

SOIL BORINGS 14
STRUCTURE NO. 016–D011
SHEET NO. 72 OF 77 SHEETS

F.A.P. RTE.	SECTION	COUNTY	TOTAL SHEETS	SHEET NO.
351	2010-081-R	COOK	1045	497
		CONTRACT NO. 60L72		
		ILLINOIS FED. AID PROJECT		

Geo Services, Inc.
Geotechnical, Environmental & Civil Engineering
805 Emmons Court, Suite 204
Naperville, Illinois 60565
(630) 355-2588

SOIL BORING LOG

GSI Job No. 10195
Page 1 of 2
Date 3/8/12

ROUTE IL Route 7/U.S. Route 6 (159th St.) DESCRIPTION IL Rte. 7 from Will Cook Rd. to Ravinia Av LOGGED BY NW

SECTION 2010-081-R LOCATION SW1/4, SEC. 16, TWP. T36N, RNG. R12E, 3rd PM

COUNTY Cook DRILLING METHOD HSA/ROTARY HAMMER TYPE CME Automatic

STRUCT. NO. 016-D011
Station
BORING NO. SB-22
Station 387+93
Offset 14.80ft Right
Ground Surface Elev. 687.00 ft

Surface Water Elev. n/a ft
Stream Bed Elev. n/a ft
Groundwater Elev.:
First Encounter Dry to 10' ft
Upon Completion n/a ft
After ___ Hrs. ___ ft

Description	Elev.	DEPTH (ft)	BLOWS (/6")	UCS Qu (tsf)	MOIST (%)
SAND & GRAVEL-black	686.10				9
CLAY LOAM-brown, gray & black-medium stiff to very stiff (Fill)			4		
			6	3.5	21
			8	P	
			2		
			2	1.2	32
		-5	4	B	
			1		
			2	0.5	51
			2	P	
			1		
			2	1.3	29
		-10	3	P	
PEAT-black-loose	676.50		1		
			1		95
			6		
SILTY LOAM-dark brown	674.00		ST		17
		-15			
CLAY-gray-medium stiff to stiff	671.50		1		
			1	1.1	23
			3	B	
			3		
			4	1.5	23
		-20	6	B	
CLAY-gray-medium stiff to stiff *(continued)*			3		
			5	1.1	22
			6	B	
			2		
			3	0.9	23
		-25	3	B	
			3		
			5	1.3	23
			8	B	
SILTY LOAM-brown & gray-medium dense	659.00		5		
			5		23
		-30	5		
SAND & GRAVEL-gray-loose to medium dense	655.00		4		
			4		21
		-35	4		
			7		
			12		10
		-40	12		

The Unconfined Compressive Strength (UCS) Failure Mode is indicated by (B-Bulge, S-Shear, P-Penetrometer)
The SPT (N value) is the sum of the last two blow values in each sampling zone (AASHTO T206)
BBS, from 137 (Rev. 8-99)

Geo Services, Inc.
Geotechnical, Environmental & Civil Engineering
805 Emmons Court, Suite 204
Naperville, Illinois 60565
(630) 355-2588

SOIL BORING LOG

GSI Job No. 10195
Page 2 of 2
Date 3/8/12

ROUTE IL Route 7/U.S. Route 6 (159th St.) DESCRIPTION IL Rte. 7 from Will Cook Rd. to Ravinia Av. LOGGED BY NW

SECTION 2010-081-R LOCATION SW1/4, SEC. 16, TWP. T36N, RNG. R12E, 3rd PM

COUNTY Cook DRILLING METHOD HSA/ROTARY HAMMER TYPE CME Automatic

STRUCT. NO. 016-D011
Station
BORING NO. SB-22
Station 387+93
Offset 14.80ft Right
Ground Surface Elev. 687.00 ft

Surface Water Elev. n/a ft
Stream Bed Elev. n/a ft
Groundwater Elev.:
First Encounter Dry to 10' ft
Upon Completion n/a ft
After ___ Hrs. ___ ft

Description	Elev.	DEPTH (ft)	BLOWS (/6")	UCS Qu (tsf)	MOIST (%)
SAND & GRAVEL-gray-loose to medium dense *(continued)*	645.00				
SAND-gray-medium dense to dense			10		
			10		20
		-45	9		
			8		
			10		22
		-50	10		
			5		
			10		21
		-55	14		
			10		
			15		17
		-60	17		
SAND-gray-medium dense to dense *(continued)*	625.00				
SAND & GRAVEL-gray-dense			12		
			19		7
		-65	15		
SILTY LOAM-gray-medium dense	620.00		9		
			12		10
		-70	15		
SILT-gray-dense	615.00		15		
			18		20
	612.00	-75	22		
End Of Boring @ -75.0'. Boring backfilled with cuttings.		-80			

The Unconfined Compressive Strength (UCS) Failure Mode is indicated by (B-Bulge, S-Shear, P-Penetrometer)
The SPT (N value) is the sum of the last two blow values in each sampling zone (AASHTO T206)
BBS, from 137 (Rev. 8-99)

Z:\PROJECTS\2010\10195 H.W.LOCHNER, IL 7 WILL COOK RD. TO US 45 (FTB 157) 5\10195 BORING LOGS\10195_LOG.GPJ 8/7/12

\\MASCHI\Chicago2\5186-USS\Struct\dgn\Land Bridges\Land Bridge 2 - 016-D011\016D011-60L72-073-SB.dgn

LOCHNER	USER NAME =	DESIGNED -	REVISED	STATE OF ILLINOIS DEPARTMENT OF TRANSPORTATION	SOIL BORINGS 15 STRUCTURE NO. 016-D011	F.A.P. RTE.	SECTION	COUNTY	TOTAL SHEETS	SHEET NO.
H. W. LOCHNER, INC. 225 WEST WASHINGTON STREET 12 TH FLOOR CHICAGO, ILLINOIS 60606	FILE NAME = 016D011-60L72-073-SB.dgn	CHECKED -	REVISED			351	2010-081-R	COOK	1045	498
	PLOT SCALE =	DRAWN - EF	REVISED					CONTRACT NO. 60L72		
	PLOT DATE =	CHECKED - RH	REVISED		SHEET NO. 73 OF 77 SHEETS		ILLINOIS	FED. AID PROJECT		

Geo Services, Inc.
Geotechnical, Environmental & Civil Engineering
805 Admiral Court, Suite 204
Naperville, Illinois 60565
(630) 355-2866

SOIL BORING LOG

GSI Job No. 10195
Page 1 of 2
Date 3/1/12

ROUTE IL Route 7/U.S. Route 6 (159th St.) DESCRIPTION IL Rte. 7 from Will Cook Rd. to Ravinia Av. LOGGED BY JZ

SECTION 2010-081-R LOCATION SW1/4, SEC. 16, TWP. T36N, RNG. R12E, 3rd PM

COUNTY Cook DRILLING METHOD HSA/ROTARY HAMMER TYPE CME Automatic

STRUCT. NO. 016-D011
Station
BORING NO. SB-23
Station 388+79
Offset 20.70ft Left
Ground Surface Elev. 686.30 ft

Surface Water Elev. n/a ft
Stream Bed Elev. n/a ft
Groundwater Elev.:
First Encounter 678.3 ft ▼
Upon Completion n/a ft
After ___ Hrs. ___ ft

Description	Elev.	DEPTH (ft)	BLOWS (/6")	UCS Qu (tsf)	MOIST (%)
ASPHALT	685.55				
CLAY to CLAY LOAM-brown, gray & black-soft to very stiff (Fill)			3		
			4	2.0	23
			5	P	
			2		
		-5	3	1.5	25
			4	P	
			2		
			3	0.9	28
			4	B	
			2		
			2	0.4	25
		-10	2	B	
			2		
			1	0.4	31
			2	B	
PEAT-black-very loose	673.30				
			1		
			1		278
		-15	1		
SILTY CLAY-dark brown-medium stiff (Wet)	670.80				
			1		
			1	0.5	32
			2	P	
SILTY SAND & GRAVEL-gray-loose	668.30				
			4		
			4		14
		-20	4		
SILTY LOAM-gray-loose	665.80				
			2		
			3		20
			3		
			2		
			3		24
		-25	4		
			2		
			3		23
			5		
CLAY-gray-very stiff	658.30				
			3		
			5	2.1	21
		-30	6	B	
SILTY LOAM-gray-loose	654.30				
			3		
			4		24
		-35	4		
SILTY SAND & GRAVEL-gray-loose	649.30				
			4		
			4		16
		-40	5		

The Unconfined Compressive Strength (UCS) Failure Mode is indicated by (B-Bulge, S-Shear, P-Penetrometer)
The SPT (N value) is the sum of the last two blow values in each sampling zone (AASHTO T206)

BBS, from 137 (Rev. 8-99)

Geo Services, Inc.
Geotechnical, Environmental & Civil Engineering
805 Admiral Court, Suite 204
Naperville, Illinois 60565
(630) 355-2866

SOIL BORING LOG

GSI Job No. 10195
Page 2 of 2
Date 3/1/12

ROUTE IL Route 7/U.S. Route 6 (159th St.) DESCRIPTION IL Rte. 7 from Will Cook Rd. to Ravinia Av. LOGGED BY JZ

SECTION 2010-081-R LOCATION SW1/4, SEC. 16, TWP. T36N, RNG. R12E, 3rd PM

COUNTY Cook DRILLING METHOD HSA/ROTARY HAMMER TYPE CME Automatic

STRUCT. NO. 016-D011
Station
BORING NO. SB-23
Station 388+79
Offset 20.70ft Left
Ground Surface Elev. 686.30 ft

Surface Water Elev. n/a ft
Stream Bed Elev. n/a ft
Groundwater Elev.:
First Encounter 678.3 ft ▼
Upon Completion n/a ft
After ___ Hrs. ___ ft

Description	Elev.	DEPTH (ft)	BLOWS (/6")	UCS Qu (tsf)	MOIST (%)
SILTY SAND & GRAVEL-gray-loose *(continued)*	644.30				
SAND & GRAVEL-gray-medium dense			6		
			7		10
		-45	9		
SILTY SAND & GRAVEL-gray-medium dense	639.30				
			11		
			13		11
		-50	15		
CLAY LOAM-gray-very stiff	634.30				
			13		
			15	3.0	11
		-55	16	P	
SILTY LOAM to SILT-gray-dense to very dense	629.30				
			11		
			23		18
		-60	31		
SILTY LOAM to SILT-gray-dense to very dense *(continued)*					
			13		
			28		19
		-65	32		
			15		
			27		18
		-70	41		
SAND & GRAVEL-gray-dense	614.30				
			15		
			14		8
	611.30	-75	14		
End Of Boring @ -75.0'. Boring backfilled with cuttings.					

The Unconfined Compressive Strength (UCS) Failure Mode is indicated by (B-Bulge, S-Shear, P-Penetrometer)
The SPT (N value) is the sum of the last two blow values in each sampling zone (AASHTO T206)

BBS, from 137 (Rev. 8-99)

Z:\PROJECTS\2010\10195 H.W.LOCHNER, IL 7 WILL COOK RD. TO US 45 (FTB 157, 51/95) BORING LOGS\10195_LOG.GPJ 9/17/12

\\M4SCH1\Chicago2\5186-USGS\Struct\dgn\Land Bridges\Land Bridge 2 - 016-D011\016D011-60L72-074-SB.dgn

LOCHNER	USER NAME =	DESIGNED -	REVISED	STATE OF ILLINOIS DEPARTMENT OF TRANSPORTATION	SOIL BORINGS 16 STRUCTURE NO. 016-D011	F.A.P. RTE.	SECTION	COUNTY	TOTAL SHEETS	SHEET NO.
H. W. LOCHNER, INC. 225 WEST WASHINGTON STREET 12 TH FLOOR CHICAGO, ILLINOIS 60606	FILE NAME = 016D011-60L72-074-SB.dgn	CHECKED -	REVISED			351	2010-081-R	COOK	1045	499
	PLOT SCALE =	DRAWN - EF	REVISED					CONTRACT NO. 60L72		
	PLOT DATE =	CHECKED - RH	REVISED		SHEET NO. 74 OF 77 SHEETS		ILLINOIS FED. AID PROJECT			

Geo Services, Inc.
Geotechnical Environmental & Civil Engineering
805 Aimwell Court, Suite 204
Naperville, Illinois 60565
(630) 355-2686

GSI Job No. 10195

SOIL BORING LOG

Page 1 of 2

Date 3/8/12

ROUTE IL Route 7/U.S. Route 6 (159th St.) DESCRIPTION IL Rte. 7 from Will Cook Rd. to Ravinia Av LOGGED BY NW

SECTION 2010-081-R LOCATION SW1/4, SEC. 16, TWP. T36N, RNG. R12E, 3rd PM

COUNTY Cook DRILLING METHOD HSA/ROTARY HAMMER TYPE CME Automatic

STRUCT. NO. 016-D011
Station
BORING NO. SB-24
Station 389+13
Offset 14.00ft Right
Ground Surface Elev. 686.90 ft

Surface Water Elev. n/a ft
Stream Bed Elev. n/a ft
Groundwater Elev.:
First Encounter Dry to 10' ft
Upon Completion n/a ft
After ___ Hrs. ___ ft

Description	Elev.	DEPTH (ft)	BLOWS (/6")	UCS Qu (tsf)	MOIST (%)
SAND & GRAVEL-black	686.00				9
CLAY-dark brown-medium stiff to very stiff (Fill)			5		
			7	3.3	22
			9	P	
			2		
		-5	3	0.6	27
			3	B	
			1		
			2	0.6	25
			2	B	
			1		
		-10	2	0.7	27
			2	B	
PEAT-dark brown to black-very loose (Fill)	676.40		1		
			1	0.5	83
			2	P	
SILTY CLAY LOAM-dark brown & gray-medium stiff	673.90		2		
			3	0.5	18
		-15	3	P	
SAND & GRAVEL-dark brown & gray-medium dense	671.40		5		
			8		11
			9		
SILTY SAND & GRAVEL-gray-medium dense	668.90		7		
			8		18
		-20	9		
SILT-gray-loose	666.40		3		
			4		21
			4		
SILTY CLAY LOAM-gray-loose	663.90		3		
			3	0.7	26
		-25	4	B	
			3		
			4	1.0	24
			5	B	
CLAYEY SAND & GRAVEL-gray-medium dense	658.90		10		
			10		6
		-30	6		
CLAY-gray-stiff	654.90		5		
			7	1.5	22
		-35	10	P	
SILTY SAND & GRAVEL-gray-medium dense	649.90		5		
			5		17
		-40	7		

The Unconfined Compressive Strength (UCS) Failure Mode is indicated by (B-Bulge, S-Shear, P-Penetrometer)
The SPT (N value) is the sum of the last two blow values in each sampling zone (AASHTO T206)

BBS, from 137 (Rev. 8-99)

Geo Services, Inc.
Geotechnical Environmental & Civil Engineering
805 Aimwell Court, Suite 204
Naperville, Illinois 60565
(630) 355-2686

GSI Job No. 10195

SOIL BORING LOG

Page 2 of 2

Date 3/8/12

ROUTE IL Route 7/U.S. Route 6 (159th St.) DESCRIPTION IL Rte. 7 from Will Cook Rd. to Ravinia Av. LOGGED BY NW

SECTION 2010-081-R LOCATION SW1/4, SEC. 16, TWP. T36N, RNG. R12E, 3rd PM

COUNTY Cook DRILLING METHOD HSA/ROTARY HAMMER TYPE CME Automatic

STRUCT. NO. 016-D011
Station
BORING NO. SB-24
Station 389+13
Offset 14.00ft Right
Ground Surface Elev. 686.90 ft

Surface Water Elev. n/a ft
Stream Bed Elev. n/a ft
Groundwater Elev.:
First Encounter Dry to 10' ft
Upon Completion n/a ft
After ___ Hrs. ___ ft

Description	Elev.	DEPTH (ft)	BLOWS (/6")	UCS Qu (tsf)	MOIST (%)
SILTY SAND & GRAVEL-gray-medium dense *(continued)*	644.90				
SAND & GRAVEL-gray-medium dense			8		
			11		11
		-45	15		
			5		
			6		16
		-50	6		
CLAY-gray-hard	636.90		12		
			15	6.0	18
		-55	19	B	
SILTY CLAY LOAM-gray-medium dense to dense	629.90		10		
			12	5.7	18
		-60	15	B	
SILTY CLAY LOAM-gray-medium dense to dense *(continued)*			11		
			15	4.5	19
		-65	18	P	
CLAY LOAM-gray-hard	619.90		17		
			24	4.5	12
		-70	33	P	
			50/5		
					10
End Of Boring @ -75.0'. Boring backfilled with cuttings.	611.90	-75			
		-80			

The Unconfined Compressive Strength (UCS) Failure Mode is indicated by (B-Bulge, S-Shear, P-Penetrometer)
The SPT (N value) is the sum of the last two blow values in each sampling zone (AASHTO T206)

BBS, from 137 (Rev. 8-99)

Z:\PROJECTS\2010\10195 H.W.LOCHNER, IL 7 WILL COOK RD. TO US 45 (PTB 157, 5/10/195 BORING LOGS\10195_LOG.GPJ 8/17/12

\\N4SCH1\Chicago2\5186-USGS\Struct\dgn\Land Bridges\Land Bridge 2 - 016-D011\016D011-60L72-075-SB.dgn

LOCHNER	USER NAME =	DESIGNED -	REVISED	STATE OF ILLINOIS DEPARTMENT OF TRANSPORTATION	SOIL BORINGS 17 STRUCTURE NO. 016-D011	F.A.P. RTE.	SECTION	COUNTY	TOTAL SHEETS	SHEET NO.
H. W. LOCHNER, INC. 225 WEST WASHINGTON STREET 12 TH FLOOR CHICAGO, ILLINOIS 60606	FILE NAME = 016D011-60L72-075-SB.dgn	CHECKED -	REVISED			351	2010-081-R	COOK	1045	500
	PLOT SCALE =	DRAWN - EF	REVISED			CONTRACT NO. 60L72				
	PLOT DATE =	CHECKED - RH	REVISED		SHEET NO. 75 OF 77 SHEETS	ILLINOIS FED. AID PROJECT				