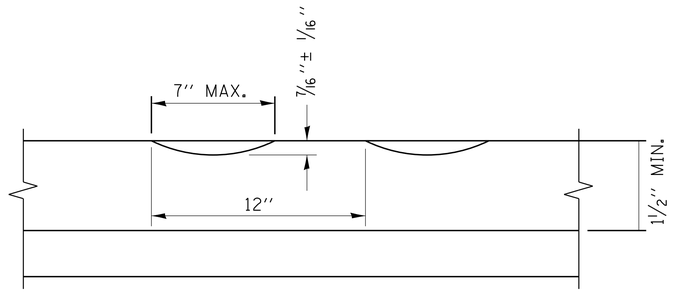

SECTION A-A

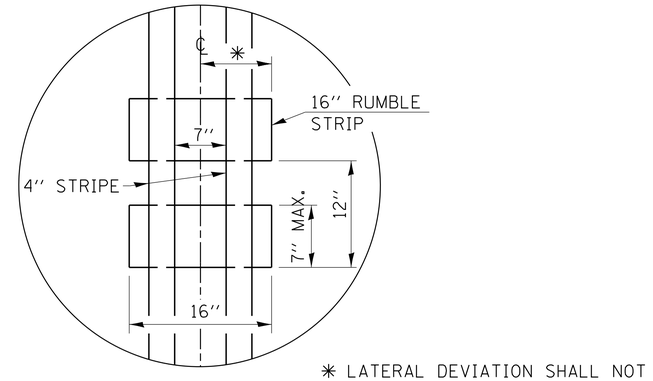

✱ LATERAL DEVIATION SHALL NOT EXCEED ONE INCH IN 100 FEET.

DETAIL B

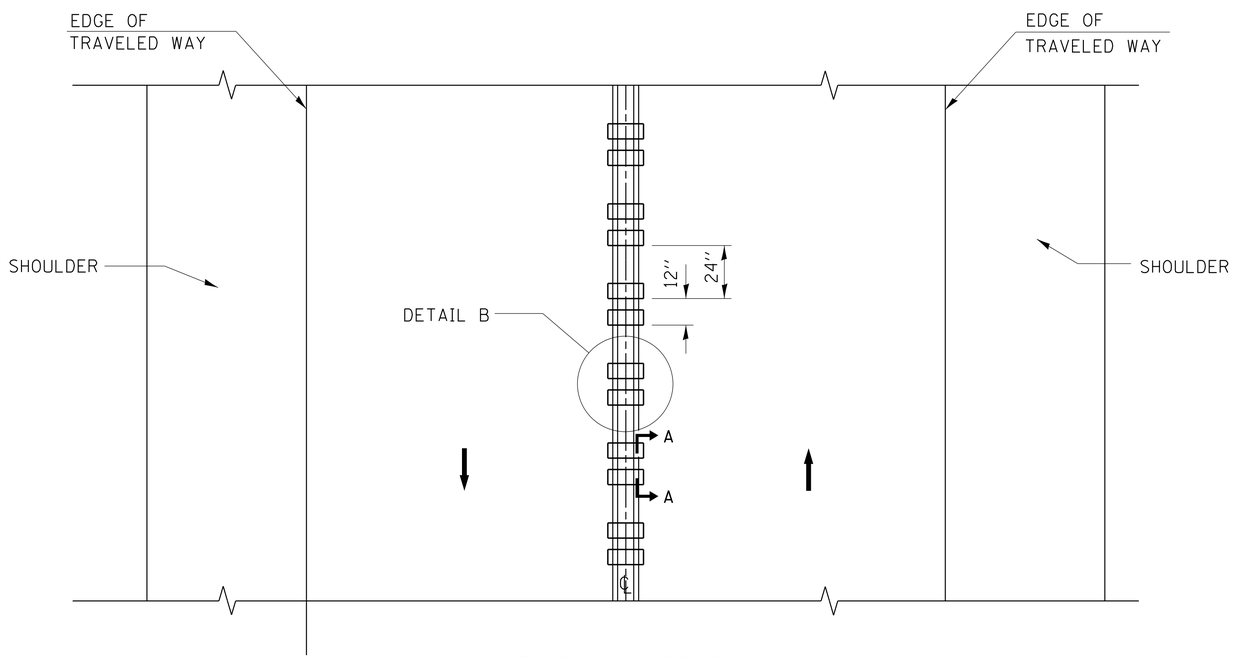

TWO-WAY ROAD

GENERAL NOTES

CENTERLINE RUMBLE STRIPS SHALL BE CONSTRUCTED ACCORDING TO SECTION 642 ALONG THE CENTERLINE OF PAVEMENT.

SEE STANDARD 780001 FOR OTHER STRIPING LAYOUTS.

RUMBLE STRIPS SHALL NOT BE PLACED ON BRIDGES.

ALL RUMBLE STRIPS SHALL BE MILLED.

CENTERLINE RUMBLE STRIPS SHALL BE CONTINUOUS THROUGH CONNECTIONS OF SIDEROADS WITH NO LEFT TURN LANES.

DISCONTINUE CENTERLINE RUMBLE STRIPS THROUGH THE LIMITS OF ALL LEFT TURN LANES, INCLUDING ANY LANE TAPER SECTIONS.

AFTER RUMBLE STRIPS ARE INSTALLED, THE PAVEMENT SURFACE SHALL BE SWEPT CLEAN PRIOR TO THE PLACEMENT OF THE NEW PAVEMENT MARKINGS.

WHERE USED, ADJUST SPACING OF RAISED REFLECTIVE PAVEMENT MARKERS TO FALL IN WIDER GAP BETWEEN RUMBLE STRIPS.

BASIS OF PAYMENT

THIS WORK WILL BE PAID FOR AT THE CONTRACT UNIT PRICE PER FOOT FOR CENTERLINE-RUMBLE STRIP OF THE WIDTH SPECIFIED.

HOT-SPRAY THERMOPLASTIC PAVEMENT MARKING WILL BE USED OVER THE RUMBLE STRIPS, AND WILL BE PAID FOR SEPARATELY.