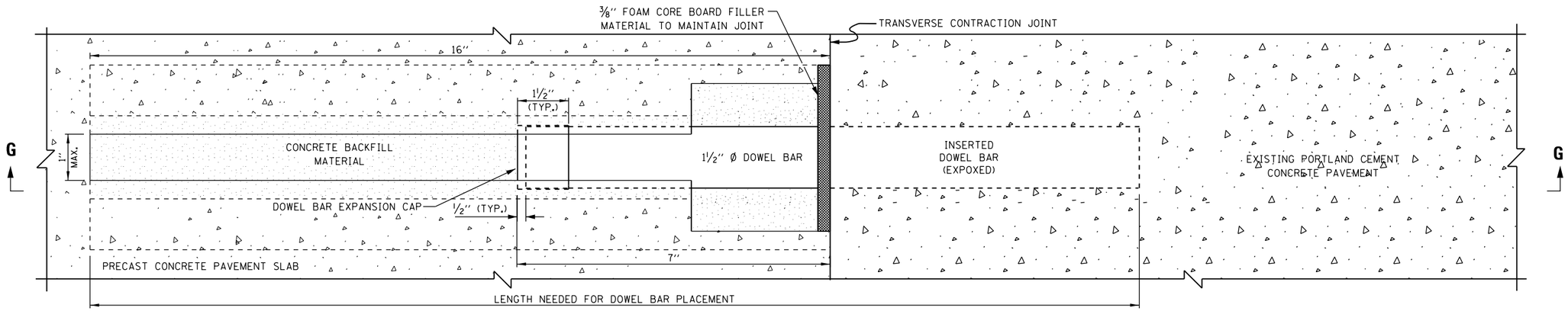

PLAN VIEW

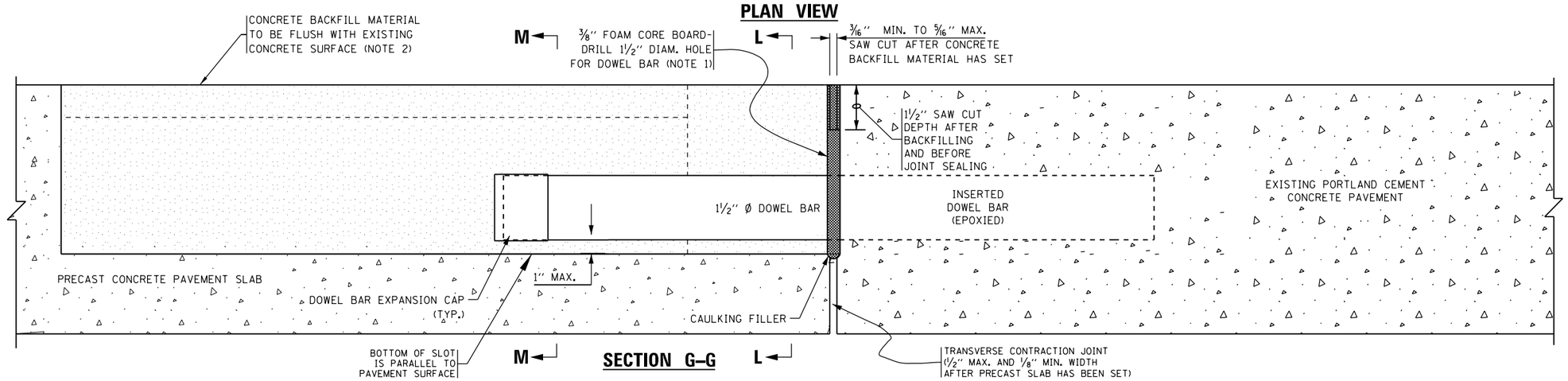

SECTION G–G

DETAIL G – NARROW MOUTH DOWEL BAR PLACEMENT DETAIL FOR ISOLATED PRECAST PANELS

(FOR OPTIONAL APPLICATION WITH ALL ISOLATED SLABS IN PLACE OF FULL RETROFITS)

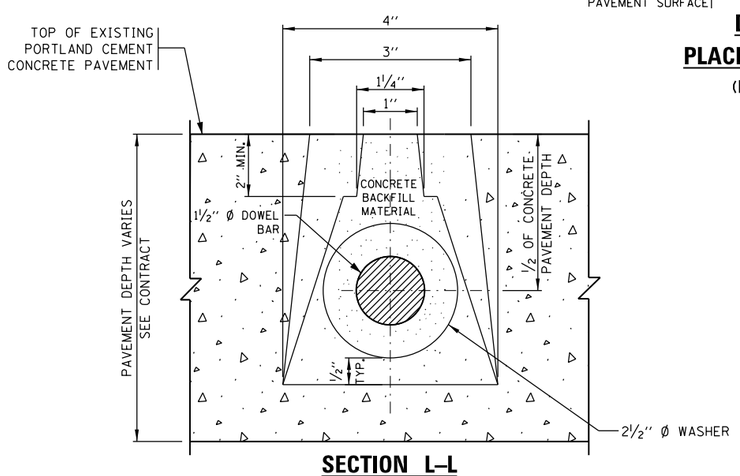

SECTION L–L

NOTES:

1. PLACE FOAM CORE BOARDS TO THE TOP OF PATCH.
2. UPON COMPLETION, THE FINISHED SURFACE OF THE CONCRETE BACKFILL MATERIAL SHALL NOT BE BELOW EXISTING CONCRETE SURFACE.

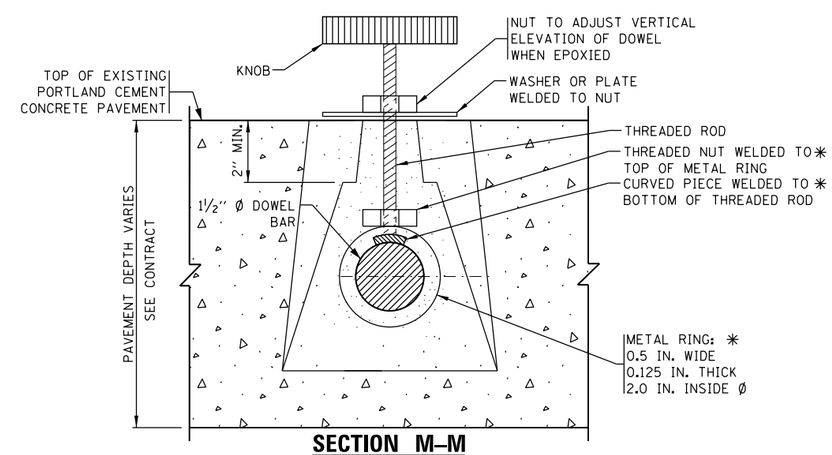

SECTION M–M

CLAMP DETAIL FOR SLIDING DOWEL BAR SLOTS

✳ METAL RING MAY BE REPLACED WITH A STRONG MAGNET WELDED TO THE THREADED ROD. AT LEAST ONE CLAMP WILL BE NEEDED FOR EACH INSERTED DOWEL BAR TO MAINTAIN ALIGNMENT.

FILE NAME = pw:\\IL084EBIDINTEG.illinois.gov:PWIDOT\Documents\IDOT Offices\District 1\Projects\District\DRAWN\CADData\CADsheets\bd57.dgn	USER NAME = gaglianobt	DESIGNED - O. PATEL	REVISED - D.G. 6-14	STATE OF ILLINOIS DEPARTMENT OF TRANSPORTATION	PRECAST CONCRETE PAVEMENT SLABS	F.A. RTE.	SECTION	COUNTY	TOTAL SHEETS / SHEET NO.
			REVISED - D.G. 9-16						
	PLOT SCALE = 100.0000 ' / in.	CHECKED -	REVISED -			BD 57		CONTRACT NO.	
Default	PLOT DATE = 9/20/2016	DATE - 10-25-2013	REVISED -		SCALE: NONE / SHEET 17 OF 19 SHEETS / STA. TO STA.	ILLINOIS	FED. AID PROJECT		