NOTES

1. CABINET SHALL BE FABRICATED FROM 0.125-INCH (3.175) SHEET ALUMINUM #3003H14, FORMED AND ARC WELDED.
2. ALL SCREWS AND HARDWARE SHALL BE PLATED, GALVANIZED, OR MADE OF BRASS, ALUMINUM OR STAINLESS STEEL, UNLESS OTHERWISE NOTED.
3. NAME PLATE SHALL HAVE ENGRAVED 0.75-INCH (19.05) HIGH LETTERS FILLED IN BLACK: "STATE OF ILLINOIS LIGHTING CONTROLS" UNLESS OTHERWISE SPECIFIED.
4. ONE INCH THICK POLYISOCYANURATE INSULATION SHALL BE INSTALL AND PERMANENTLY CEMENTED ON ALL SIDES OF THE CABINET AND DOORS.
5. CABINET SHALL BE PRIMED AND PAINTED AS SPECIFIED.
6. ELECTRIC UTILITY METER BOX SHALL BE MOUNTED ON THE SIDE OF CONTROL CABINET AS SHOWN ON THE PANEL LAYOUT DIAGRAM.
7. THE COMPLETED CONTROLLER SHALL BE U.L. LISTED AS AN INDUSTRIAL CONTROL PANEL UNDER UL508.
8. METAL MOUNTING PANEL SHALL BE FABRICATED FROM THE SAME MATERIAL AS THE CABINET AND SHALL BE FLANGED BACK 0.75-INCHES I.D. ON 4 SIDES.
9. CIRCUIT BREAKERS AND CONTACTORS AND OTHER COMPONENTS SHALL BE MOUNTED ON 0.125-INCH (3.175) THICK GLASTIC INSULATION BACK PANEL.
10. ALL DEVICES SHALL BE FRONT REMOVABLE.
11. TIME CLOCK CHANNEL 1 N.O. CONTACT IS CLOSED NIGHT AND OPEN DAY (LIGHTS ON).
12. SET LATITUDE TO 42 DEGREES. SET CH.1 TO 23 MINUTES AFTER ASTRONOMICAL SUNSET, 50 MINUTES BEFORE ASTRONOMICAL SUNRISE. SET CH.2 TO 60 MINUTES AFTER ASTRONOMICAL SUNSET (WITH A SIGNAL LENGTH OF 1 SECOND), +28 MINUTES AFTER ASTRONOMICAL SUNRISE (WITH A SIGNAL LENGTH OF 7 SECONDS.)
13. BUS BAR SHALL HAVE 22 LUG TERMINALS SIZED TO ACCOMMODATE REQUIRED WIRE SIZES. 240V NEUTRAL BUS SHALL BE PAINTED WHITE, GROUND BUS SHALL BE PAINTED GREEN, AND THE 120V NEUTRAL BUS SHALL BE PAINTED GREY.
14. ALL LUGS SHALL BE OF COPPER SCREWS AND CONNECTORS, SPRING HELD.
15. ALL WIRING TERMINATIONS SHALL BE RATED NOT LESS THAN 75 DEGREE CENTIGRADE.
16. ALL CONTROL WIRING SHALL BE 600V #12 TYPE MTW., SCADA WIRING SHALL BE #18.
17. ALL POWER WIRING SHALL BE 600V TYPE RHH/RHW.
18. ALL WIRING WITHIN THE CABINET SHALL BE COLOR CODED AS INDICATED:

    R - RED Y - YELLOW
    B - BLACK W - WHITE
    BL- BLUE G - GREEN
    G - GREY

19. MOSCAD I/O WIRING SHALL BE:

    DIGITAL INPUT (DI) WIRING SHALL BE #18 MTW PURPLE.

    ANALOG INPUT (AI) WIRING SHALL BE #18, 2/C SHIELDED.

    AI AND DI WIRING MAY BE BUNDLED TOGETHER, BUT SHALL NOT BE BUNDLED WITH OTHER WIRING.
20. ALL DIMENSIONS ARE IN INCHES (MILLIMETERS) UNLESS OTHERWISE INDICATED.
21. SCHEMATIC SHOWN WITH BREAKER OPEN, CONTACTOR OPEN, CABINET DOOR CLOSED, CLOCK NOT ACTIVE (DE-ENERGIZED STATE).
22. A LAMINATED COPY OF THE CIRCUIT SCHEMATIC AND SCADA I/O DIAGRAM (NO SMALLER THAN 11"x17" EACH) SHALL BE ATTACHED TO THE INSIDE OF THE CONTROLLER WITH STAINLESS STEEL SCREWS.
23. WHEN A MODIFICATION TO AN EXISTING LIGHTING CONTROLLER IS INDICATED, A 15A CKT BREAKER AND WIRING SHALL BE ADDED AS INDICATED.

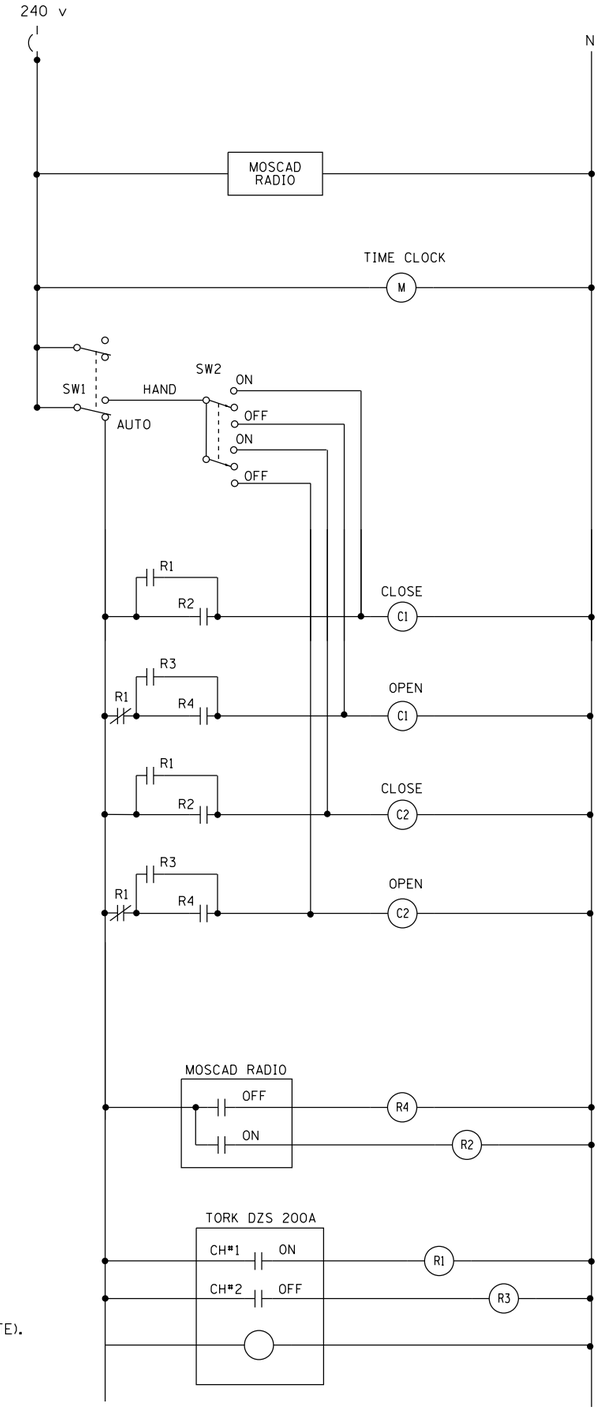

CONTROL CIRCUIT LADDER LOGIC DIAGRAM

MOSCAD I/O ASSIGNMENTS		
TERM	MOSCAD DESTINATION	DESCRIPTION OF INPUT
1	DIGITAL INPUT 1	ALARM KNOWLEDGE
2	DIGITAL INPUT 2	DOOR OPEN
3	DIGITAL INPUT 3	MAIN(S) BREAKER OPEN
4	DIGITAL INPUT 4	CONTACTOR 1 OPEN
5	DIGITAL INPUT 5	CONTACTOR 2 OPEN
6	DIGITAL INPUT 6	CABINET IN NON-AUTO
7	DIGITAL INPUT 7	BACK-UP CLOCK OFF CALL
8	DIGITAL INPUT 8	BACK-UP CLOCK ON CALL
17	24 V+	24+VDC
18	DI COMMON	COMMON
21	K1 C	K1 COMMON
22	K1 NO	LIGHTS ON CALL
24	K2 C	K2 COMMON
25	K2 NO	LIGHTS OFF CALL
32	ANALOG INPUT 1 (+)	CABINET NEUTRAL CURRENT
33	ANALOG INPUT 1 (-)	CABINET NEUTRAL CURRENT
34	ANALOG INPUT 2 (+)	CABINET SERVICE VOLTAGE
35	ANALOG INPUT 2 (-)	CABINET SERVICE VOLTAGE
40	P. GROUND	GROUND

ALL ANALOG INPUTS WILL BE 4-20 MA ONLY. DIGITAL OUTPUT RELAYS WILL BE ELECTRICALLY ENERGIZED AND MOMENTARILY HELD

MIXED I/O MODULE MODEL NUMBER V436