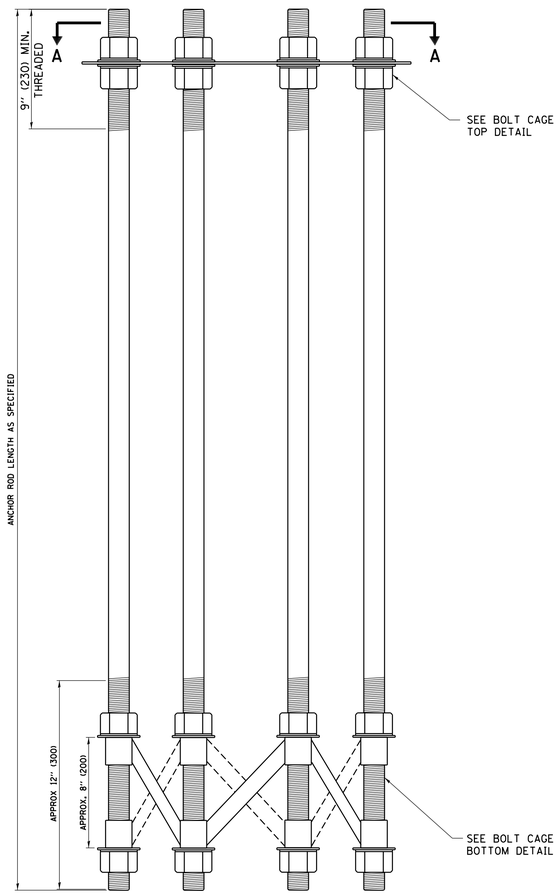

ANCHOR BOLT CAGE

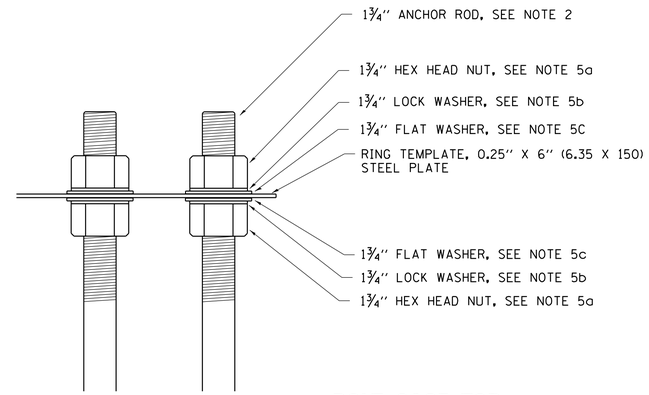

BOLT CAGE TOP

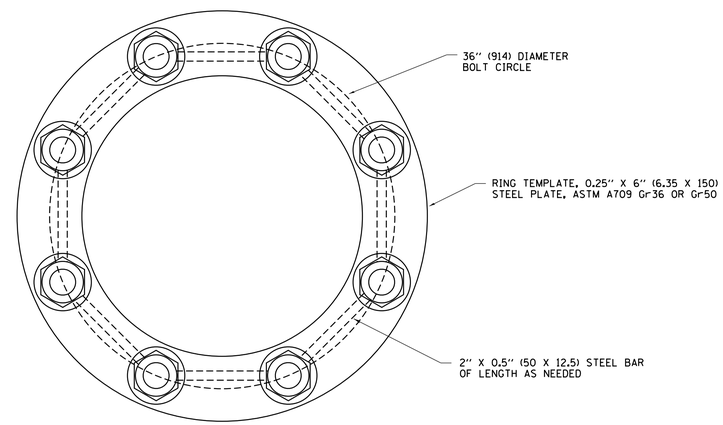

SECTION A–A

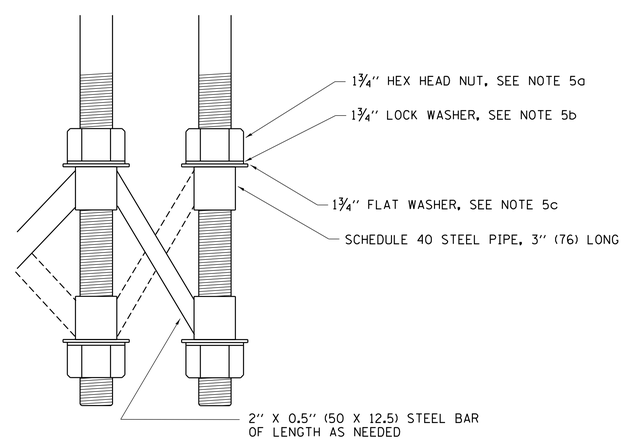

BOLT CAGE BOTTOM

NOTES:

1. ALL DIMENSIONS IN INCHES (MILLIMETERS) UNLESS OTHERWISE SHOWN
2. ANCHOR RODS SHALL BE STRAIGHT AND SHALL BE ACCORDING TO ASTM F1554, GRADE 725 (GRADE 105) AND GALVANIZED ACCORDING TO ARTICLE 1006.09.
3. ANCHOR ROD INFORMATION SHALL BE SUBMITTED FOR APPROVAL AND SHALL BE FULLY COORDINATED WITH TOWER MANUFACTURERS REQUIREMENTS
4. CUT NUTS, OR JAM NUTS, ARE NOT ALLOWED
5. ANCHOR ROD CAGE HARDWARE SHALL BE IN ACCORDANCE WITH THE FOLLOWING:

   a) 1.5 (38) HEX HEAD NUTS
      AASHTO M291, GRADE C, C3, D ,DH OR DH3
      HOT DIPPED GALVANIZED AASHTO M 232

   b) 1.5 (38) HELICAL LOCK WASHERS
      ANSI/ASME B18.21.1
      I.D. 1.504 - 1.524
      O.D. 2.159 MAX.
      WIDTH 0.292 MIN.
      THICKNESS 0.375 MIN.
      HARDNESS 26-45 ROCKWELL C
      HOT DIPED GALVANIZED AASHTO M232

   c) 1.5 (38) FLAT WASHERS
      AASHTO M293
      O.D. 2.75
      I.D. 1.56
      THICKNESS 0.16 - 0.25
      HARDNESS 26-45 ROCKWELL C.
      HOT DIPED GALVANIZED AASHTO M232
6. THE SHAFT LENGTHS SHALL BE BASED ON SOIL BORINGS IN THE PLANS AND OR A DETERMINATION OF SOIL CONDITIONS BY THE ENGINEER.
7. ALL FOUNDATION REINFORCEMENT STEEL SHALL BE EPOXY COATED.
8. THE FOUNDATION SHALL BE POURED MONOLITHICALLY AND SHALL HAVE NO CONSTRUCTION JOINTS.
9. ANCHOR RODS AND ALL ASSOCIATED HARDWARE ARE SHOWN AS MINIMUMS. SIZING SHALL BE DETERMINED BY THE TOWER MANUFACTURER AND APPROVED BY THE ENGINEER. EACH FOUNDATION SHALL HAVE A MINIMUM OF 8 ANCHOR RODS.

FILE NAME = pw:\\IL084EBIDINTEG.illinois.gov:PWIDOT\Documents\IDOT Offices\District 1\Projects\Dist8\DRAWN\CADData\CADsheets\be506.dgn	USER NAME = footemj	DESIGNED - R. TOMSONS 09-02-10	REVISED - R. TOMSONS 02-27-13	STATE OF ILLINOIS DEPARTMENT OF TRANSPORTATION	HIGH MAST LIGHT TOWER 120 FT TO 140 FT FOUNDATION DETAIL	F.A. RTE.	SECTION	COUNTY	TOTAL SHEETS	SHEET NO.
			REVISED - R. TOMSONS 04-29-16							
	PLOT SCALE = 50.000 ' / in.	CHECKED -	REVISED -			BE-506		CONTRACT NO.		
Default	PLOT DATE = 4/29/2016	DATE -	REVISED -		SCALE: SHEET 2 OF 2 SHEETS STA. TO STA.		ILLINOIS	FED. AID PROJECT		

be506.dgn 4/29/2016 8:27:04 AM User=footemj