SHAFT LENGTH (D) TABLE				
SOIL CONSISTENCY		AVERAGE STRENGTH	LIGHT TOWER MOUNTING HEIGHT	
		Qu in tsf (Qu in kPa)	150 FT. (46 m)	160 FT. (48.8 m)
COHESIVE	SOFT	<0.5 (<50)	28'-6" (8.7 m)	30'-0" (9.1 m)
	MEDIUM	0.5 TO 1 (50 to 100)	23'-6" (7.0 m)	24'-0" (7.3 m)
	STIFF	1 TO 2 (100 TO 200)	19'-6" (5.9 m)	20'-0" (6.1 m)
	VERY STIFF	2 TO 4 (200 TO 400)	17'-0" (5.1 m)	17'-6" (5.2 m)
	HARD	>4 (>400)	15'-6" (4.5 m)	15'-6" (4.5 m)
		N in BLOWS/FT. (N in BLOWS/0.3m)		
GRANULAR	VERY LOOSE	<5 (<5)	21'-0" (6.3 m)	21'-6" (6.5 m)
	LOOSE	5 TO 10 (5 TO 10)	19'-0" (5.7 m)	19'-6" (5.9 m)
	MEDIUM	10 TO 25 (10 TO 25)	18'-0" (5.5 m)	18'-6" (5.6 m)
	DENSE	25 TO 50 (25 TO 50)	17'-0" (5.2 m)	17'-6" (5.3 m)
	VERY DENSE	>50 (>50)	16'-6" (4.9 m)	17'-0" (5.1 m)

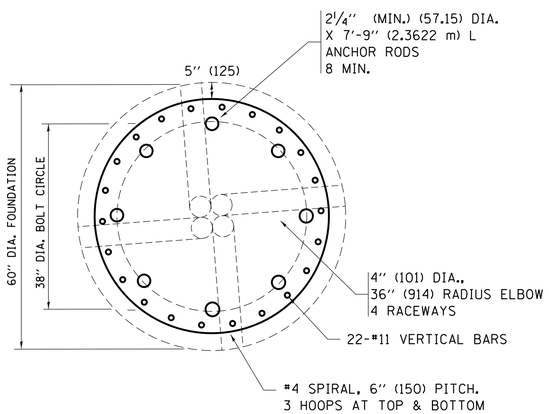

SECTION–B–B

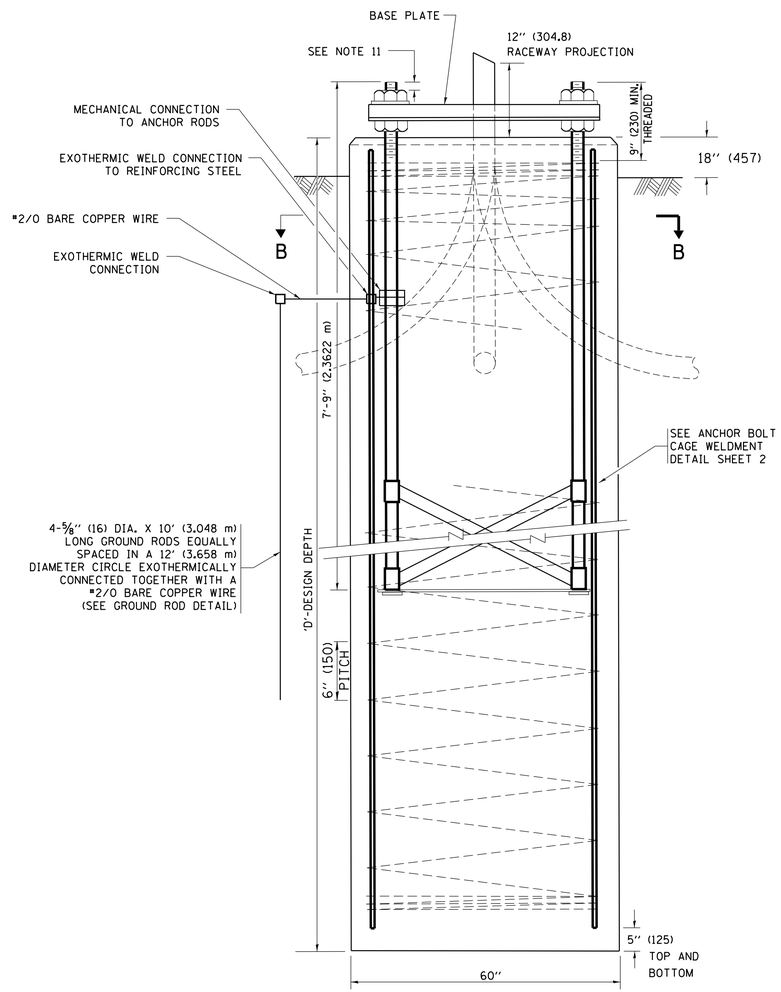

FOUNDATION ELEVATION

DESIGN NOTES

1. ALL DIMENSIONS IN INCHES (MILLIMETERS) UNLESS OTHERWISE SHOWN
2. THE ANCHOR RODS SHALL BE VERTICAL NO ADJUSTMENT SHALL BE ALLOWED AFTER THE FOUNDATION IS PLACED.
3. THE GAP BETWEEN THE FOUNDATION AND THE BASE PLATE SHALL BE ENCLOSED WITH A STAINLESS STEEL SCREEN FASTENED WITH A STAINLESS STEEL BAND.
4. THE TOP OF THE FOUNDATION TO 18" (450) BELOW GRADE SHALL BE FORMED.
5. SURFACE WATER WILL NOT BE PERMITTED TO ENTER THE HOLE AND ALL WATER WHICH MAY HAVE INFILTRATED INTO THE HOLE SHALL BE REMOVED BEFORE PLACING CONCRETE.
6. THE LIGHT TOWER SHALL NOT BE ERECTED UNTIL AFTER THE CONCRETE HAS BEEN CURED ACCORDING TO ARTICLE 1020.13.
7. ANCHOR RODS SHALL BE STRAIGHT AND SHALL BE ACCORDING TO ASTM F1554, GRADE 725 (GRADE 105) AND GALVANIZED ACCORDING TO ARTICLE 1006.9.
8. ANCHOR ROD INFORMATION SHALL BE SUBMITTED FOR APPROVAL AND SHALL BE FULLY COORDINATED FOR APPROVAL WITH TOWER MANUFACTURER REQUIREMENTS.
9. REINFORCEMENT BARS SHALL BE ACCORDING TO ARTICLE 1006.10
10. TWO ANCHOR RODS OPPOSITE EACH OTHER SHALL HAVE THE ANCHOR ROD THREADS PEENED AFTER NUTS ARE INSTALLED.
11. A MINIMUM OF THREE FULL THREADS SHALL REMAIN EXPOSED AFTER LIGHT TOWER IN INSTALLED.
12. ALL GROUNDING INDICATED IN THE PLANS SHALL BE INCLUDED IN THE COST OF THE LIGHT TOWER FOUNDATION AND SHALL NOT BE PAID FOR SEPARATELY.
13. CUT NUTS, OR JAM NUTS, ARE NOT ALLOWED
14. ANCHOR ROD QUANTITY, DIAMETER, AND LENGTH SHALL BE DETERMINED BY THE TOWER MANUFACTURER AND APPROVED BY THE ENGINEER. EACH FOUNDATION SHALL HAVE A MINIMUM OF 8 ANCHOR RODS.
15. COORDINATE THE ROD CIRCLE DIAMETER OF THE TOWER WITH THE DIAMETER OF THE ANCHOR ROD CAGE.
16. THE FOUNDATION SHALL BE POURED MONOLITHICALLY AND SHALL HAVE NO CONSTRUCTION JOINTS.

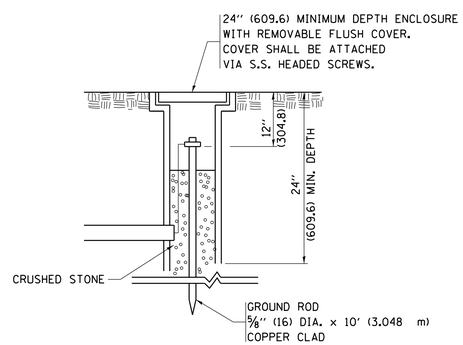

GROUND WELL DETAIL

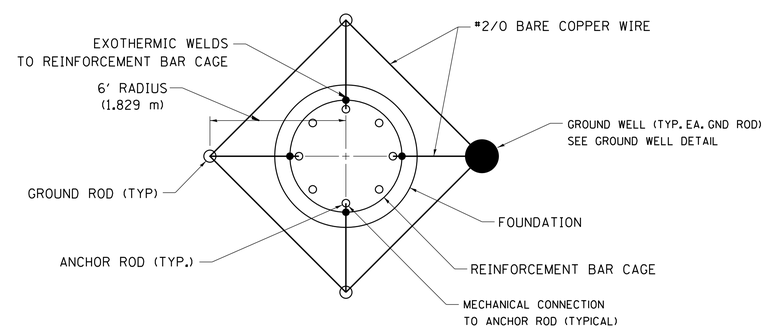

GROUND ROD DETAIL

FILE NAME = pw:\\IL084EBIDINTEG.illinois.gov:PWIDOT\Documents\IDOT Offices\District 1\Projects\Distr...	USER NAME = footemj	DESIGNED - R. TOMSONS	REVISED - R. TOMSONS 02-27-13
		DRAWN - ...\CADData\CADsheets\be511.dgn	REVISED - R. TOMSONS 04-29-16
	PLOT SCALE = 50.000 ' / in.	CHECKED -	REVISED -
Default	PLOT DATE = 4/29/2016	DATE - 09-02-10	REVISED -

STATE OF ILLINOIS
DEPARTMENT OF TRANSPORTATION

HIGH MAST LIGHT TOWER
150 FT TO 160 FT FOUNDATION DETAIL

SCALE: | SHEET 1 OF 2 SHEETS | STA. TO STA.

F.A. RTE.	SECTION	COUNTY	TOTAL SHEETS	SHEET NO.
	BE-511	CONTRACT NO.		
	ILLINOIS	FED. AID PROJECT		

be511.dgn 4/29/2016 7:48:25 AM User=footemj