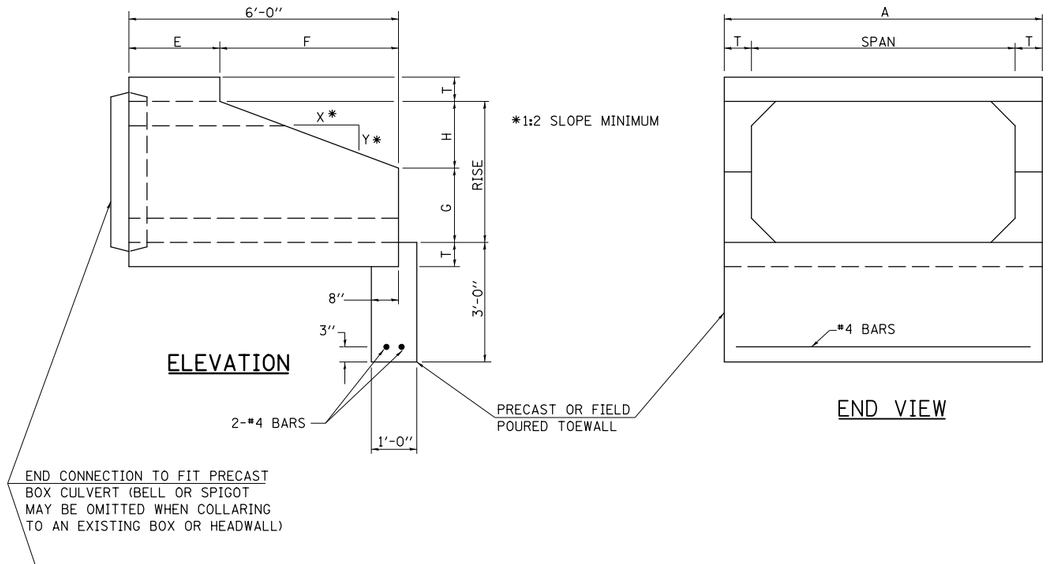

ELEVATION

END VIEW

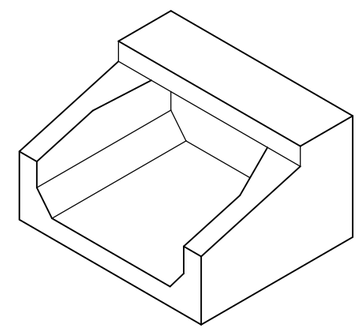

ISOMETRIC

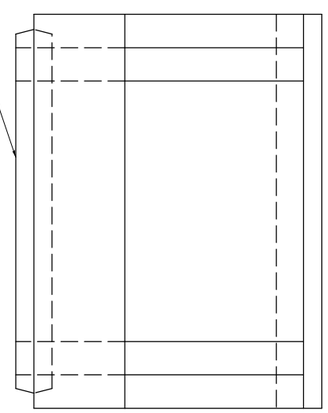

PLAN

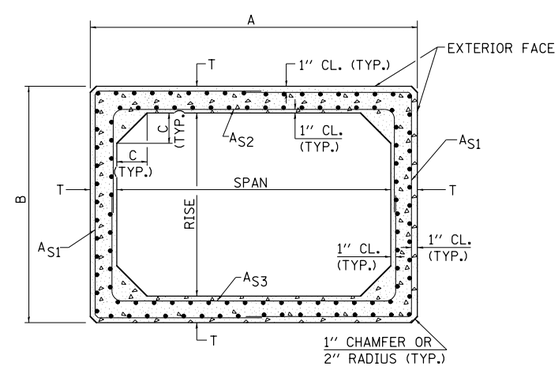

CROSS SECTION

⬡ "NON-STANDARD PRECAST CONCRETE BOX CULVERT (ASTM) DESIGNS"; STANDARD PCBC (ASTM) DESIGNS ARE PREFERRED.

** NOTE:

THE DIMENSIONS INDICATED ARE FOR END SECTIONS THAT ARE TO BE USED WITH PRECAST BOX CULVERT SECTIONS DESIGNED FOR 2' OR MORE OF FILL (AASHTO M259). THE DIMENSIONS MAY BE MODIFIED FOR THE END SECTION TO BE COMPATIBLE WITH PRECAST CULVERT SECTIONS DESIGNED FOR LESS THAN 2' OF FILL (AASHTO M273).

GENERAL NOTES

SHOP DRAWINGS SHALL BE SUBMITTED IN ACCORDANCE WITH THE REQUIREMENTS OF ARTICLE 1042.03(b) OF THE STANDARD SPECIFICATIONS.

MINIMUM CONCRETE STRENGTH SHALL BE 5000 PSI AFTER 28 DAYS.

THE JOINTS OF THE PRECAST BOX SECTIONS SHALL BE SEALED WITH MASTIC IN ACCORDANCE WITH SECTION 1055 OF THE STANDARD SPECIFICATIONS FOR ROAD AND BRIDGE CONSTRUCTION.

THE TERMS AS1, AS2, & AS3 DENOTE THE REQUIRED STEEL AREAS FOR REINFORCEMENT AS SPECIFIED IN AASHTO M259. REINFORCEMENT SHALL BE WELDED WIRE FABRIC CONFORMING TO AASHTO M55-81.

DIMENSIONS **

	SPAN X RISE	T (INCHES)	A (FT.-IN.)	B (FT.-IN.)	C (INCHES)	E (FT.-IN.)	F (FT.-IN.)	G (FT.-IN.)	H (FT.-IN.)	SLOPE (Y:X)
⬡	2' X 2'	4	2-8	2-8	4	3-0	3-0	1-0	1-0	1:3
	3' X 2'	4	3-8	2-8	4	3-0	3-0	1-0	1-0	1:3
	3' X 3'	4	3-8	3-8	4	2-0	4-0	1-8	1-4	1:3
	4' X 2'	5	4-10	2-10	5	3-0	3-0	1-0	1-0	1:3
	4' X 3'	5	4-10	3-10	5	2-0	4-0	1-8	1-4	1:3
	4' X 4'	5	4-10	4-10	5	2-0	4-0	2-0	2-0	1:2
⬡	5' X 2'	6	6-0	3-0	6	3-0	3-0	1-0	1-0	1:3
	5' X 3'	6	6-0	4-0	6	2-0	4-0	1-8	1-4	1:3
	5' X 4'	6	6-0	5-0	6	2-0	4-0	2-0	2-0	1:2
	5' X 5'	6	6-0	6-0	6					
⬡	6' X 2'	7	7-2	3-2	7	3-0	3-0	1-0	1-0	1:3
	6' X 3'	7	7-2	4-2	7	2-0	4-0	1-8	1-4	1:3
	6' X 4'	7	7-2	5-2	7	2-0	4-0	2-0	2-0	1:2
	6' X 5'	7	7-2	6-2	7	2-0	4-0	3-0	2-0	1:2
	6' X 6'	7	7-2	7-2	7	2-0	4-0	4-0	2-0	1:2
	7' X 4'	8	8-4	5-4	8	2-0	4-0	2-0	2-0	1:2
	7' X 5'	8	8-4	6-4	8	2-0	4-0	3-0	2-0	1:2
	7' X 6'	8	8-4	7-4	8	2-0	4-0	4-0	2-0	1:2
	7' X 7'	8	8-4	8-4	8	2-0	4-0	5-0	2-0	1:2
	8' X 4'	8	9-4	5-4	8	2-0	4-0	2-0	2-0	1:2
	8' X 5'	8	9-4	6-4	8	2-0	4-0	3-0	2-0	1:2
	8' X 6'	8	9-4	7-4	8	2-0	4-0	4-0	2-0	1:2
	8' X 7'	8	9-4	8-4	8	2-0	4-0	5-0	2-0	1:2
	8' X 8'	8	9-4	9-4	8	2-0	4-0	6-0	2-0	1:2
	9' X 5'	9	10-6	6-6	9	2-0	4-0	3-0	2-0	1:2
	9' X 6'	9	10-6	7-6	9	2-0	4-0	4-0	2-0	1:2
	9' X 7'	9	10-6	8-6	9	2-0	4-0	5-0	2-0	1:2
	9' X 8'	9	10-6	9-6	9	2-0	4-0	6-0	2-0	1:2
	9' X 9'	9	10-6	10-6	9	2-0	4-0	7-0	2-0	1:2
	10' X 5'	10	11-8	6-8	10	2-0	4-0	3-0	2-0	1:2
	10' X 6'	10	11-8	7-8	10	2-0	4-0	4-0	2-0	1:2
	10' X 7'	10	11-8	8-8	10	2-0	4-0	5-0	2-0	1:2
	10' X 8'	10	11-8	9-8	10	2-0	4-0	6-0	2-0	1:2
	10' X 9'	10	11-8	10-8	10	2-0	4-0	7-0	2-0	1:2
	10' X 10'	10	11-8	11-8	10	2-0	4-0	8-0	2-0	1:2
	11' X 4'	11	12-10	5-10	11	2-0	4-0	2-0	2-0	1:2
	11' X 6'	11	12-10	7-10	11	2-0	4-0	4-0	2-0	1:2
	11' X 8'	11	12-10	9-10	11	2-0	4-0	6-0	2-0	1:2
	11' X 10'	11	12-10	11-10	11	2-0	4-0	8-0	2-0	1:2
	11' X 11'	11	12-10	12-10	11	2-0	4-0	9-0	2-0	1:2
	12' X 4'	12	14-0	6-0	12	2-0	4-0	2-0	2-0	1:2
	12' X 6'	12	14-0	8-0	12	2-0	4-0	4-0	2-0	1:2
	12' X 8'	12	14-0	10-0	12	2-0	4-0	6-0	2-0	1:2
	12' X 10'	12	14-0	12-0	12	2-0	4-0	8-0	2-0	1:2
	12' X 12'	12	14-0	14-0	12	2-0	4-0	10-0	2-0	1:2

Note: All dimensions are in INCHES (millimeters) unless otherwise shown.

STD. 9-50 (FROM DISTRICT 9)

DISTRICT 5 DETAIL NO. 54001AAA

FILE NAME = pw:\\IL084EBIDINTEG.illinois.gov:PWIDOT\Documents\IDOT Offices\District 5\Standards\District Details\new details\54001AAA.dgn	USER NAME = piersonbr	DESIGNED -	REVISED - TJB 1/5/11
		DRAWN - JCC	REVISED - NJF 6/27/11
	PLOT SCALE = 40.0000 ' / in.	CHECKED -	REVISED - TJB 11/6/14
	PLOT DATE = 11/6/2014	DATE - 12/29/08	REVISED -

STATE OF ILLINOIS
DEPARTMENT OF TRANSPORTATION

BOX CULVERT END SECTION
(PRECAST OPTION)

SCALE: | SHEET NO. OF SHEETS | STA. | TO STA.

F.A. RTE.	SECTION	COUNTY	TOTAL SHEETS	SHEET NO.

CONTRACT NO.

ILLINOIS FED. AID PROJECT