SHEET SA 28 of SA110

F.A.U. RTE.	SECTION	COUNTY	TOTAL SHEETS	SHEET NO.
3578	15V B-1-R-1	COOK	243	118
STA.		TO STA.		
FED. ROAD DIST. NO.		ILLINOIS	FED. AID PROJECT	

CONTRACT NO. 62388

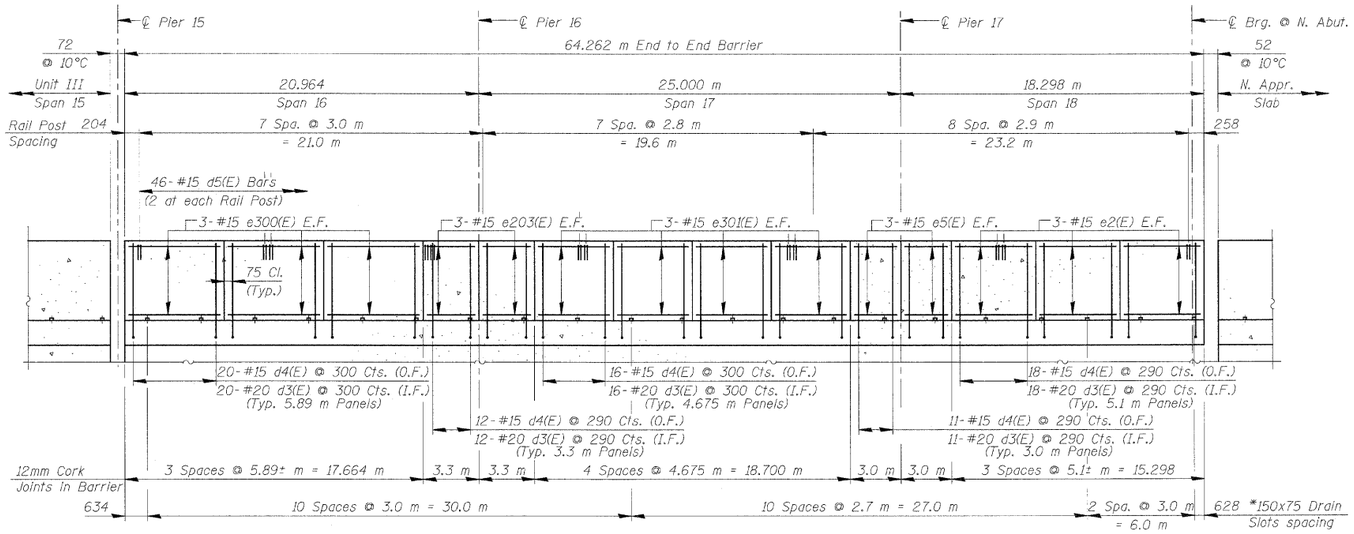

ELEVATION OF SIDEWALK BARRIER

Looking North-West

* Drain Slots shall omit the vertical reinforcement and shall be 50mm min. from the edges of joints.

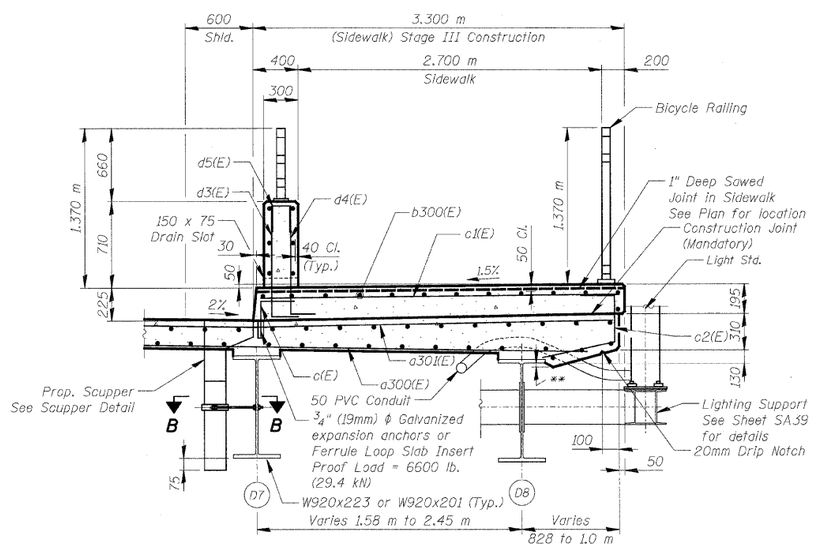

SECTION THRU SIDEWALK

See Sheet SA29 for Section B-B and Scupper Drainage Details

** Varies 10 to 90

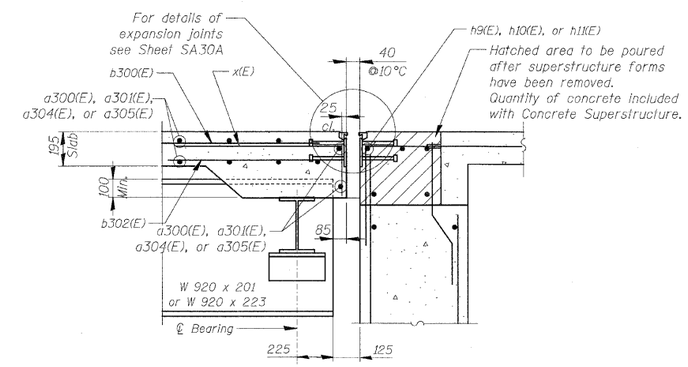

SECTION F-F

See Sheet SA27 for Section location

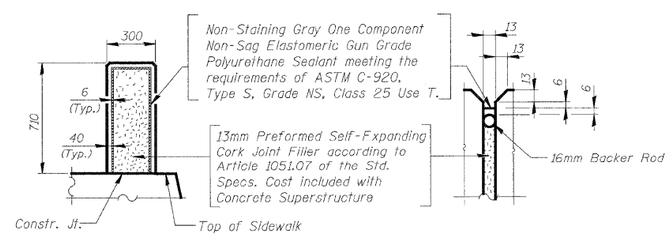

BARRIER JOINT DETAILS

NOTES

1. Reinforcement bars designated (E) shall be Epoxy Coated.
2. Bars indicated thus 20 x 3 - #15 etc. indicates 20 lines of bars with 3 lengths per line.
3. All dimensions are in millimeters (mm) except as noted.
4. See Sheet SA24 for Section E-E.
5. In lieu of providing the d3(E) & d4(E) dowels bars as shown, the contractor, at his option and expense, can submit to the engineer for his review and approval an alternate detail to drill and grout the bars. No additional compensation will be allowed if the contractor elects to use the alternate detail.

REVISIONS	
NAME	DATE

ILLINOIS DEPARTMENT OF TRANSPORTATION

SUPERSTRUCTURE DETAILS - UNIT IV-A

SOUTHWEST HIGHWAY OVER B&O RAILROAD AND STONY CREEK

FAU 3578 **SECTION** 15V B-1-R-1

STRUCTURE NUMBER 016-2771

COOK COUNTY **STATION** 4+716.497

SCALE: NONE DRAWN BY: M. Tryon

DATE: 6/17/09 CHECKED BY: A. Yargiooglu

PATRICK ENGINEERING INC.
LISLE, ILLINOIS

G:\IDOT\9556_AO\Drawings\STRUCT\28_Deck_Details UNIT IV A.dgn

tKoepper(Rdwy_Lisle) 6/26/2009 1:43:10 AM