F.A.U. RTE.	SECTION	COUNTY	TOTAL SHEETS	SHEET NO.
3578	15V B-1-R-1	COOK	243	152
STA.		TO STA.		
FED. ROAD DIST. NO.		ILLINOIS	FED. AID PROJECT	

CONTRACT NO. 62388

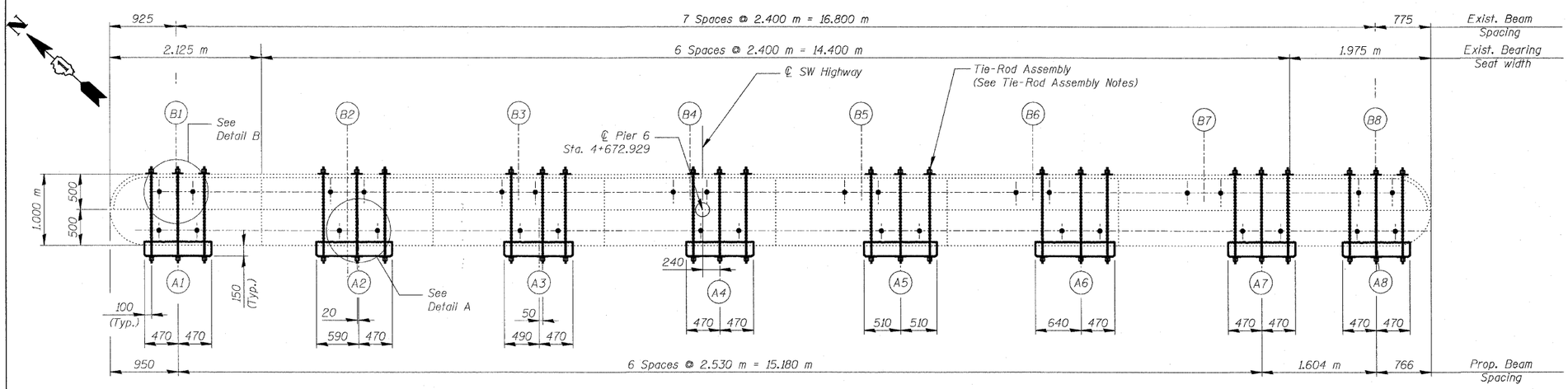

TOP PLAN

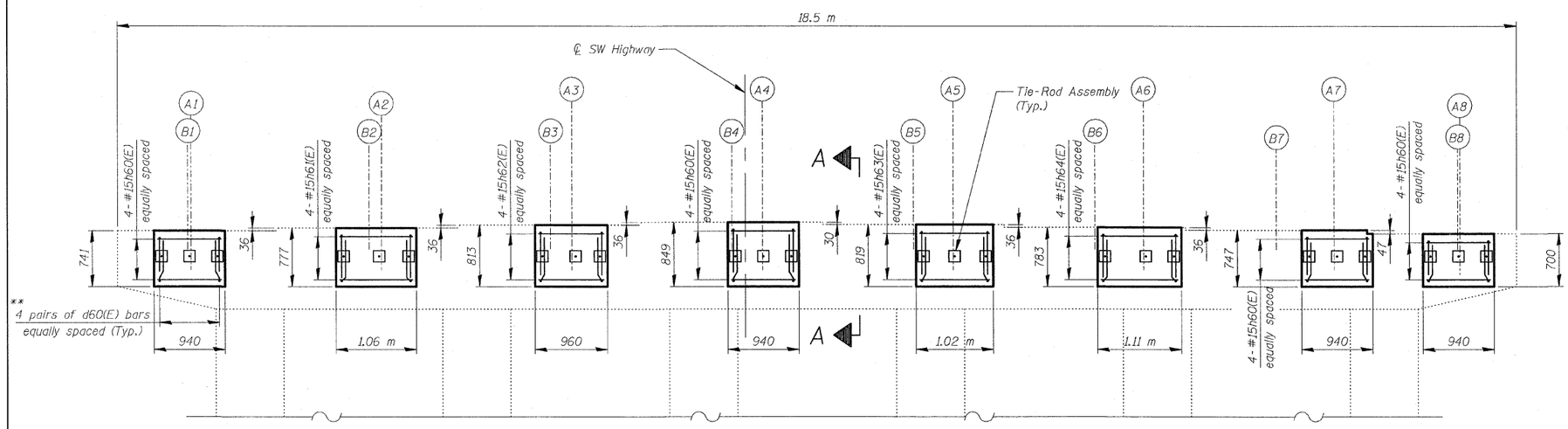

PIER 6 (EXISTING PIER 10) REMOVAL

(Looking Northeast)

BILL OF MATERIAL

Bar	No.	Size	Length (m)	Shape
d60(E)	64	#15	0.97	
h60(E)	16	#15	0.84	
h61(E)	4	#15	0.96	
h62(E)	4	#15	0.86	
h63(E)	4	#15	0.92	
h64(E)	4	#15	1.01	
Concrete Structures			m^3	1.2
Reinforcement Bars, Epoxy Coated			kg	140
*** Concrete Sealer			m^2	39
* Tie-Rod Assemblies			Each	24

* See Special Provisions

*** Quantity includes quantity required for Pier 6 & Pier 11.

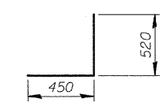

BAR d60(E)

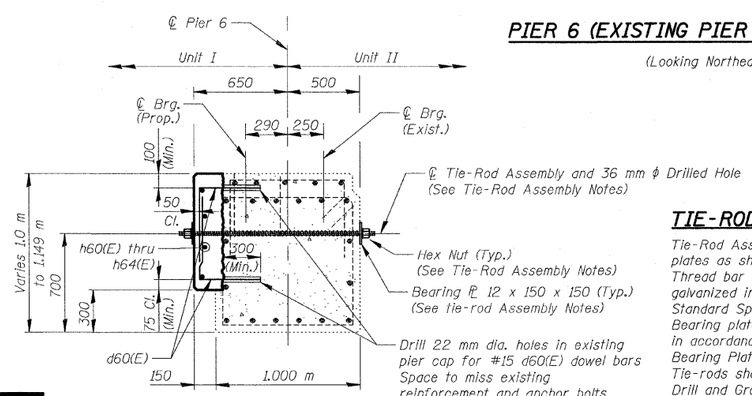

SECTION A-A

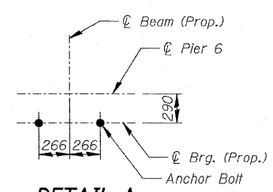

DETAIL A

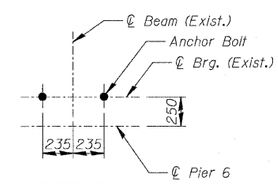

DETAIL B

NOTES

1. All dimensions are in millimeters (mm) except as noted.
2. For details of existing reinforcement in Pier Cap of Pier 6 see Sheet SA98.

TIE-ROD ASSEMBLY NOTES

Tie-Rod Assemblies shall consist of one 29 mm diameter thread bar, two hex nuts with lock washers and two bearing plates as shown in Section A-A.
Thread bar and hex nuts shall be made from steel material conforming to ASTM A615M Gr. 520 and shall be hot dip galvanized in accordance with ASTM A153. Drill and grout Tie-Rod Assemblies in accordance with Section 584 of the Standard Specifications.
Bearing plates shall be made from steel material conforming to AASHTO M 270M Gr. 250 and shall be hot dip galvanized in accordance with AASHTO M 232.
Bearing Plates and hex nuts shall be capable to develop the full load of the bar ultimate capacity.
Tie-rods shall be spaced to miss existing reinforcement and anchor bolts.
Drill and Grout Tie-Rod Assemblies in accordance with Section 584 of the Standard Specifications.
Thread bars shall be post tensioned to a force of 70 kN. Post tensioning shall be in accordance with Section 505 of the Standard Specifications.

REVISIONS	
NAME	DATE

ILLINOIS DEPARTMENT OF TRANSPORTATION

PIER 6

SOUTHWEST HIGHWAY OVER
B&O RAILROAD AND STONY CREEK

FAU 3578 SECTION 15V B-1-R-1
STRUCTURE NUMBER 016-2771
COOK COUNTY STATION 4+716.497

SCALE: NONE DRAWN BY: E. Mroczek
DATE: 6/17/09 CHECKED BY: G. Hatlestad

PATRICK ENGINEERING INC.
LISLE, ILLINOIS

$FILE$
$TIME$
$USER$
$DATE$