CONTRACT NO. 62882

F.A.P RTE.	SECTION	COUNTY	TOTAL SHEETS	SHEET NO.
326	*	McHENRY	502	98
STA. 9+35.22		TO STA.142+08.53		
FED. ROAD DIST. NO.	ILLINOIS	FED. AID PROJECT		

* (105X & 106) WRS-2

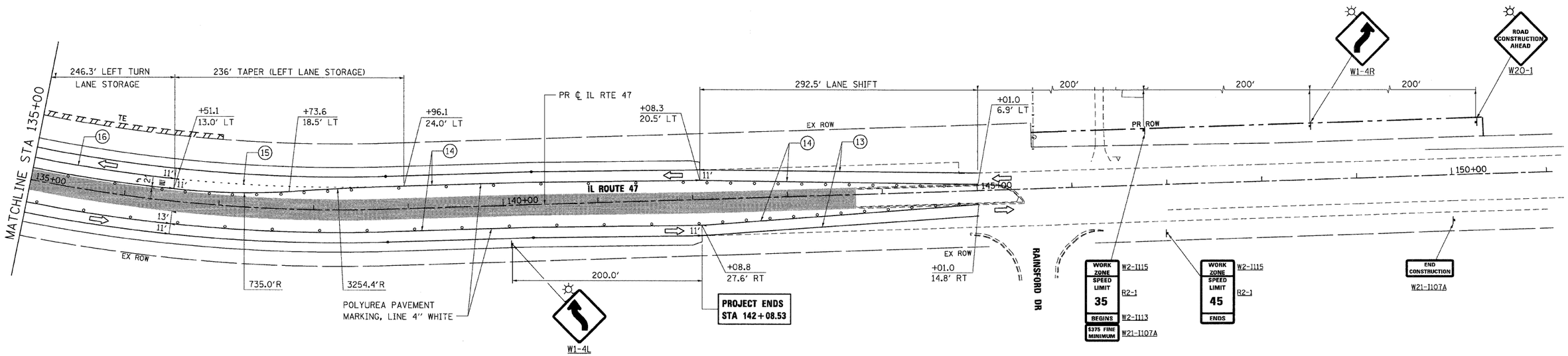

REVISIONS	
NAME	DATE

Stanley Consultants INC.
850 West Higgins Road, Suite 730, Chicago, Illinois 60631-2801
www.stanleygroup.com
Illinois Firm Registration No.: 184-001533
(773) 693-9524

ILLINOIS DEPARTMENT OF TRANSPORTATION

ILLINOIS ROUTE 47

MAINTENANCE OF TRAFFIC – STAGE 3

SHEET 6 OF 6

SCALE: VERT. 1"=50' HORIZ.

DATE: 8/5/2009

DRAWN BY: E.D.

CHECKED BY: A.A.C

PLOT DATE = Wednesday, August 05, 2009
FILE NAME = S:\11-CADD\01-sht\PHB_mot_st3_sht006.dgn
PLOT SCALE = 50.0 '/ in.
USER NAME = 3830