CONTRACT NO. 62882

F.A.P RTE.	SECTION	COUNTY	TOTAL SHEETS	SHEET NO.
326	*	McHENRY	502	244
STA. 9+35.22		TO STA.142+08.53		
FED. ROAD DIST. NO.	ILLINOIS	FED. AID PROJECT		

* (105X & 106) WRS-2

POINT	NORTHING	EASTING	ELEVATION
A	2007673.8603	958777.1873	887.41
B	2007673.9133	928801.1872	887.41
C	2007673.9554	958820.2608	889.16
D	2007672.3825	958820.2642	889.08
E	2007672.3735	958816.1906	888.71
F	2007657.3404	958801.2238	887.93
G	2007668.6857	958777.1988	887.50
H	2007653.6526	958762.1776	888.47
I	2007653.6698	958749.9632	888.70
J	2007628.9680	958750.0221	888.97
K	2007628.9568	958757.9515	888.90
L	2007618.4570	958757.9898	888.95
M	2007589.5461	958758.0954	889.25
N	2007569.5843	958773.9872	890.50
O	2007523.0798	958774.7347	891.28
P	2007513.4780	958777.4269	891.30
Q	2007466.8363	958724.5999	891.73
R	2007451.6465	958723.7072	891.73
S	2007495.9818	958789.3550	891.35
T	2007506.1674	958804.6366	891.28
U	2007589.4757	958777.3736	890.25
V	2007563.4222	958771.4312	890.75
W	2007579.6981	958829.1247	890.70
X	2007630.2194	958801.2837	888.85
Y	2007546.0696	958807.4684	891.88

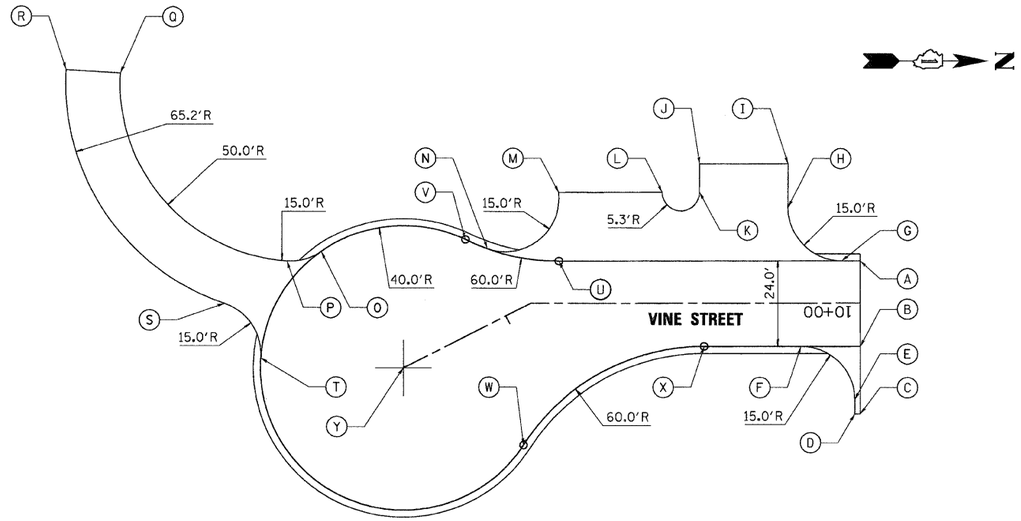

VINE STREET CUL-DE-SAC DETAIL

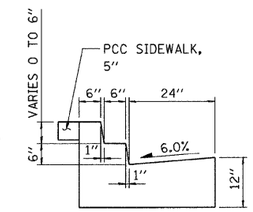

COMBINATION CONCRETE CURB & GUTTER, TYPE B-6.24 (SPECIAL) DETAIL

POINT	STATION	OFFSET	ELEVATION
A	89+00.23	32.00'	884.14
B	88+73.66	32.00'	884.39
C	88+47.08	32.00'	884.58
D	88+60.58	41.58'	884.64
E	88+73.66	41.58'	884.53
F	88+86.73	41.58'	884.43
G	88+85.31	49.56'	884.59
H	88+61.96	46.76'	884.77
I	88+79.47	63.72'	884.89
J	88+65.41	69.58'	885.20
K	88+58.73	63.58'	885.18
L	88+52.04	57.58'	885.17
M	87+95.05	69.53'	886.59
N	87+90.07	75.30'	886.70
O	87+87.58	57.50'	886.72
P	87+24.03	55.28'	886.80

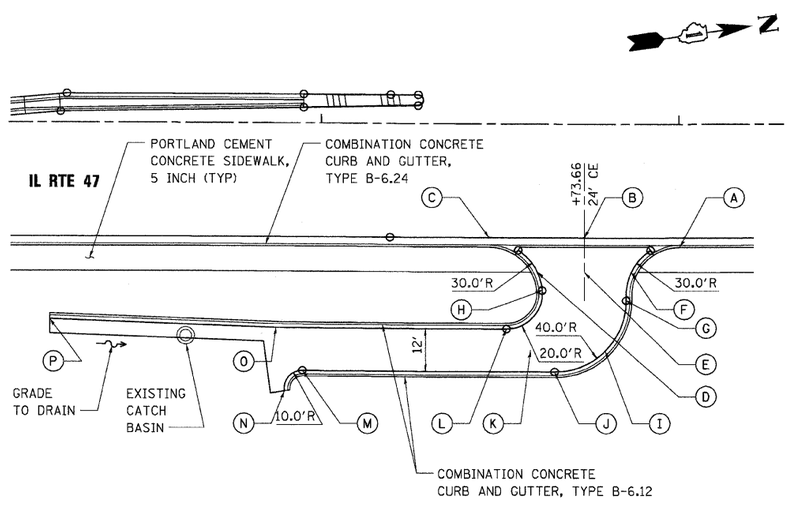

DRIVEWAY @ STA 88+73.66 DETAIL

POINT	STATION	OFFSET	ELEVATION
A	84+79.88	34.0'	887.98
B	84+30.51	32.0'	888.43
C	83+81.14	34.0'	888.88
D	84+04.67	41.58'	888.81
E	84+30.51	41.58'	888.57
F	84+56.35	41.58'	888.33
G	84+68.75	54.45'	888.80
H	84+46.57	53.18'	888.72
I	84+30.51	55.00'	888.94
J	84+12.66	54.23'	889.23
K	83+76.89	57.62'	891.43
L	83+80.47	89.61'	MEET EX.
M	83+98.66	87.58'	892.99
N	84+05.14	79.24'	892.01
O	84+13.53	85.69'	891.04
P	84+30.51	83.52'	889.86
Q	84+71.79	78.17'	MEET EX.
R	83+94.59	56.27'	890.50

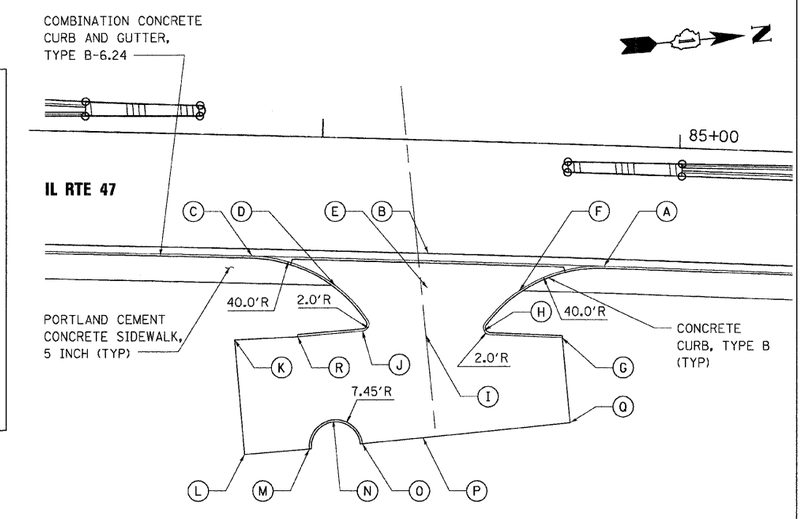

DRIVEWAY @ STA 84+27.29 DETAIL

REVISIONS	
NAME	DATE

Stanley Consultants INC
8501 West Higgins Road, Suite 730, Chicago, Illinois 60631-2801
www.stanleygroup.com
Illinois Firm Registration No.: 184-001533
(773) 693-3624

ILLINOIS DEPARTMENT OF TRANSPORTATION

ILLINOIS ROUTE 47

MISCELLANEOUS ROADWAY DETAILS

SHEET 1 OF 3

SCALE: VERT. NO SCALE HORIZ.

DATE: 8/5/2009

DRAWN BY: E.D.

CHECKED BY: A.A.C

PLOT DATE = Wednesday, August 05, 2009
FILE NAME = S:\11-CADD\01-sht\244_rdwy_det01.dgn
PLOT SCALE = 1061
USER NAME = 9538