CONTRACT NO. 62882

F.A.P RTE.	SECTION	COUNTY	TOTAL SHEETS	SHEET NO.
326	•	McHENRY	502	495

STA. 9+35.22 TO STA.142+08.53

FED. ROAD DIST. NO. | ILLINOIS | FED. AID PROJECT

(105X & 106) WRS-2

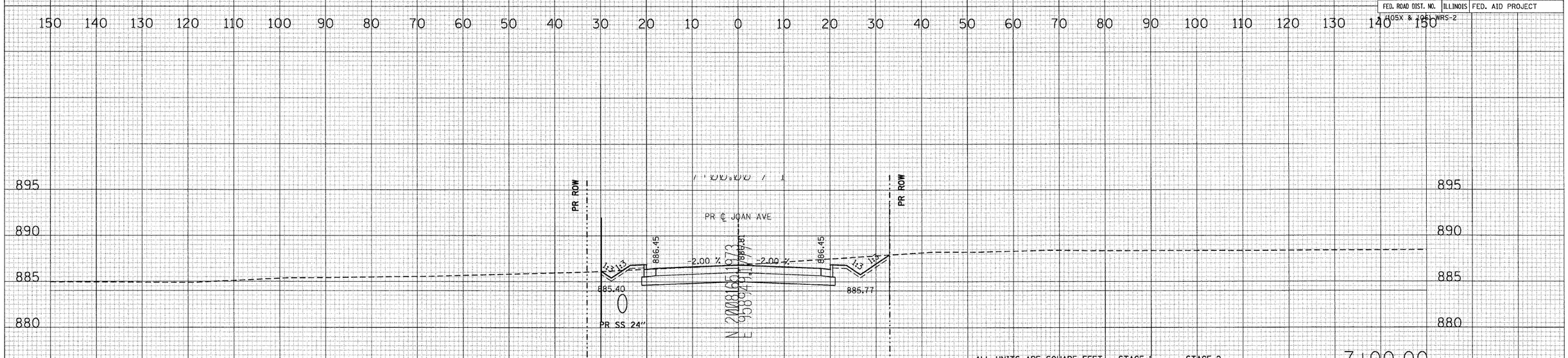

ALL UNITS ARE SQUARE FEET	STAGE-1	STAGE-2
EARTH EXCAVATION	0.00	105.04
EMBANKMENT	0.00	0.60
PGES	0.00	0.00

7+00.00

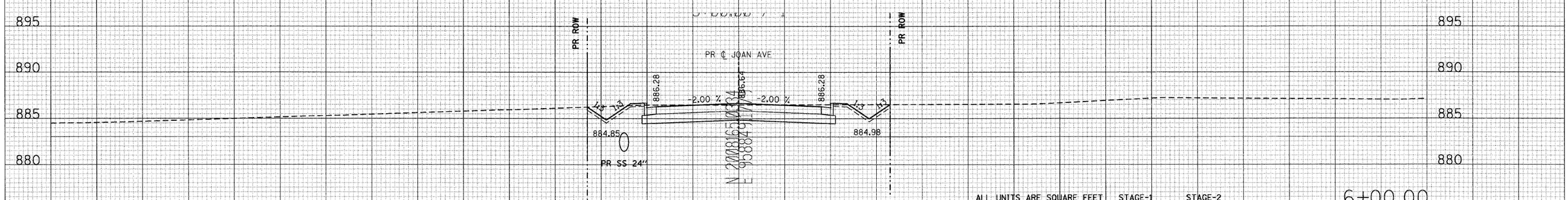

ALL UNITS ARE SQUARE FEET	STAGE-1	STAGE-2
EARTH EXCAVATION	0.00	96.52
EMBANKMENT	0.00	0.00
PGES	0.00	0.00

6+00.00

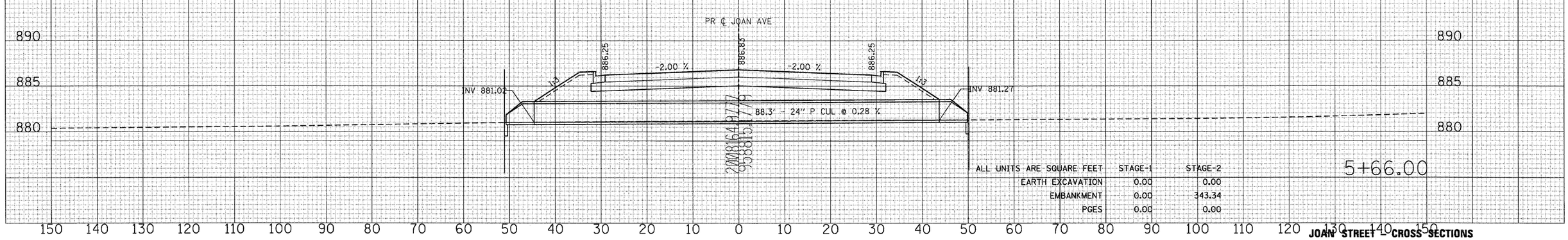

ALL UNITS ARE SQUARE FEET	STAGE-1	STAGE-2
EARTH EXCAVATION	0.00	0.00
EMBANKMENT	0.00	343.34
PGES	0.00	0.00

5+66.00

FINAL SURVEY | NOTE BOOK NO. | SURVEYED | PLOTTED | TEMPLATE | AREAS | AREAS CHECKED | BY | DATE

ORIGINAL SURVEY | NOTE BOOK NO. | SURVEYED | PLOTTED | TEMPLATE | AREAS | AREAS CHECKED | BY | DATE

PLOT DATE = Thursday, August 06, 2009
FILE NAME = S:\11-CADD\01-sht\495-497_joan_xs.dgn
PLOT SCALE = 10:1
USER NAME = 3690

JOAN STREET - CROSS SECTIONS