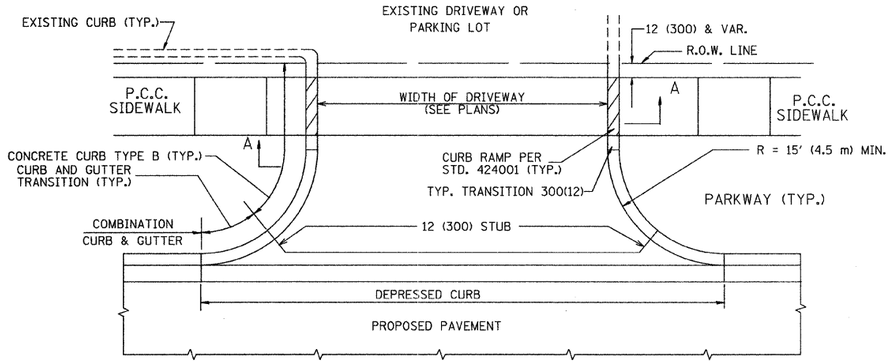

WITH CONCRETE CURB, TYPE B

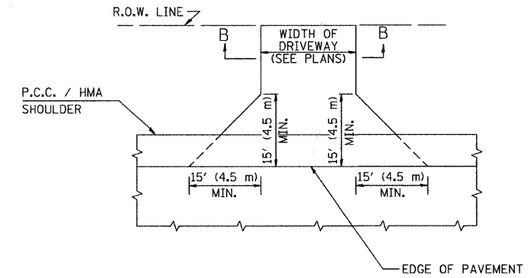

ADJACENT TO P.C.C. / HMA SHOULDER

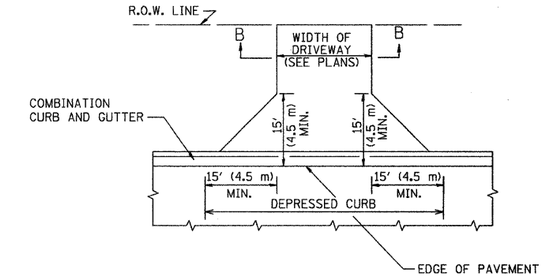

ADJACENT TO CURB AND GUTTER

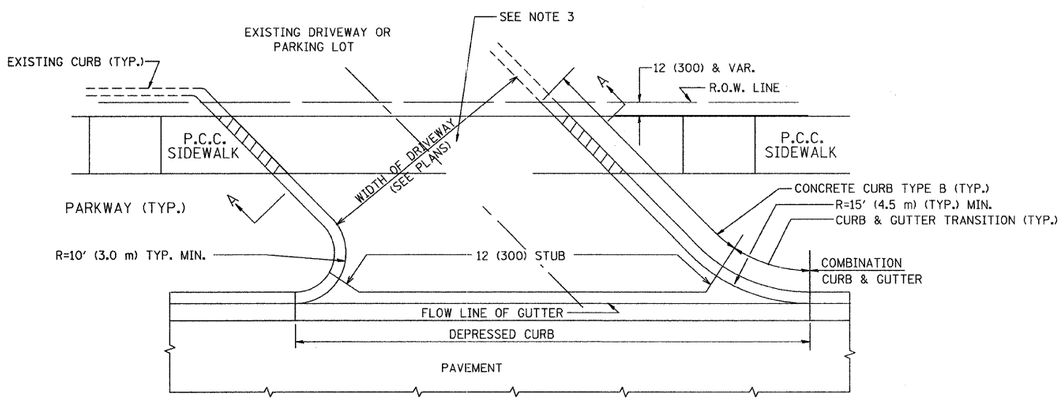

WITH CONCRETE CURB, TYPE B

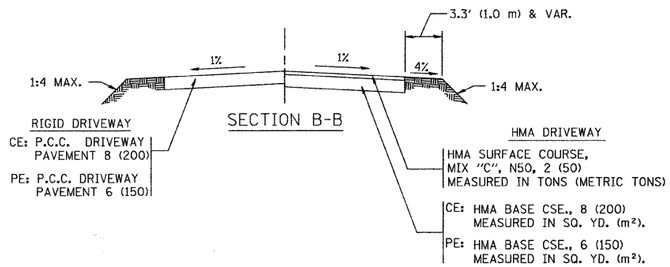

RURAL FIELD ENTRANCE (FE)

HMA SURFACE COURSE,
MIX "C", N50, 2 (50)
MEASURED IN TONS (METRIC TONS)

AGGREGATE BASE CSE., TYPE B, 8 (200)
MEASURED IN SQ. YD. (m²).

GENERAL NOTES:

DRIVEWAY SLOPES, LOCATIONS, & GEOMETRIC LAYOUT SHALL BE IN ACCORDANCE WITH THE LATEST EDITION OF THE "HANDBOOK FOR POLICY ON PERMITS FOR ACCESS DRIVEWAYS TO STATE HIGHWAYS". FOR FURTHER LAYOUT REQUIREMENTS, REFER TO ILLUSTRATIONS IN THE PERMIT HANDBOOK. DRIVEWAYS SHALL BE REPLACED IN KIND, UNLESS OTHERWISE NOTED ON THE PLANS.

COMMERCIAL DRIVEWAYS SHALL BE CONSTRUCTED WITH CONCRETE CURB, TYPE B RETURNS EXCEPT WHEN THE SIDEWALK EDGE IS 4 FEET (1.2 METERS) OR LESS FROM THE BACK OF CURB, CONSTRUCT A FLARE DRIVEWAY WITHOUT CURB.

THE RESIDENT ENGINEER SHALL CONTACT THE TRAFFIC PERMIT OFFICE AT 847/ 705-4131 FOR ANY QUESTIONS ON DRIVEWAYS SHOWN IN THE PLANS; SPECIFICALLY IN REFERENCE TO ADDITIONAL AND/OR RELOCATION/REMOVAL OF A DRIVEWAY.

COMBINATION CONCRETE CURB & GUTTER SHALL BE MEASURED STRAIGHT ACROSS THE DRIVEWAY. NO ADDITIONAL COMPENSATION WILL BE ALLOWED FOR THE CURB & GUTTER TRANSITION.

1 (25) PREFORMED EXPANSION JOINT FILLER WILL NOT BE PAID SEPARATELY, BUT SHALL BE CONSIDERED INCLUDED IN THE COST OF THE P.C.C. DRIVEWAY PAVEMENT OR P.C.C. SIDEWALK.

WHEN THE P.C.C. SIDEWALK EXTENDS THROUGH THE DRIVEWAY, THE THICKNESS OF THE SIDEWALK IN THE DRIVEWAY AREA SHALL BE THE SAME AS THE DRIVEWAY THICKNESS. SIDEWALK WILL BE PAID FOR AS P.C.C. SIDEWALK OF THE THICKNESS SPECIFIED. SIDEWALK CROSS SLOPE THRU DRIVEWAY AREA TO BE A MAXIMUM OF 1:50.

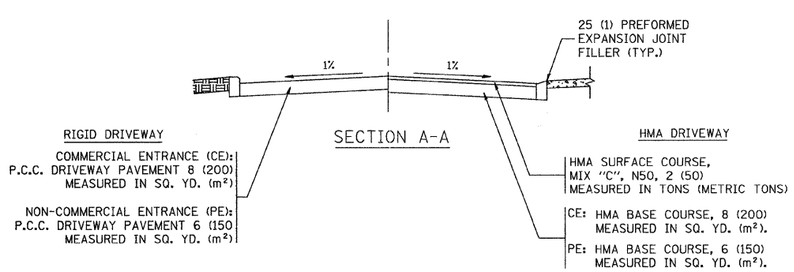

PLAN		BY	DATE
NOTE BOOK NO.	SURVEYED / PLOTTED / ALIGNMENT CHECKED / RT. OF WAY CHECKED / GRID FILE NAME		

PROFILE		BY	DATE
NOTE BOOK	SURVEYED / PLOTTED / GRADES CHECKED / B.M. NOTED		

FILE NAME = 06173_01-DTLS-04 - BD-01	USER NAME = bauerdl	DESIGNED — R. SHAH	REVISED — M. GOMEZ 04-06-01	STATE OF ILLINOIS DEPARTMENT OF TRANSPORTATION	DRIVEWAY DETAILS – DISTANCE BETWEEN R.O.W. AND FACE OF CURB & EDGE OF SHOULDER >= 15' (4.5 m)
		CHECKED —	REVISED — P. LaFLUER 04-15-03		
	PLOT SCALE = 49.9999 ' / IN.	DRAWN —	REVISED — R. BORO 01-01-07		
	PLOT DATE = 6/12/2008	CHECKED — 11-04-95	REVISED — R. BORO 06-11-08		SCALE: 1"=50' · SHEET NO. 13 OF 18 SHEETS · STA. N/A · TO STA. N/A

F.A.U. RTE.	SECTION	COUNTY	TOTAL SHEETS	SHEET NO.
2887	09-00225-00-RS	COOK	18	13
BD0156-07 (BD-01)		CONTRACT NO. 63314		
FED. ROAD DIST. NO. 1	ILLINOIS	FED. AID PROJECT ARA-9003(337)		