# INLET SPECIAL NO. 3, 4, 5, 6 REINFORCEMENT DETAIL

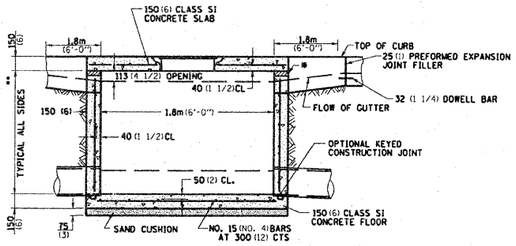


SEC. B-B

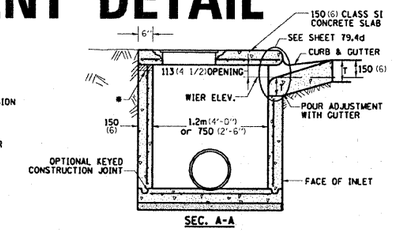


SEC. A-A

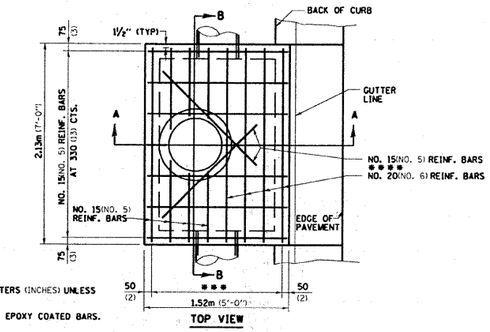


TOP VIEW

* THE WALL ADJUSTMENTS SHALL BE MADE WITH CONCRETE BUILDING BRICK OR CLASS SI CONCRETE.

THE HEIGHT OF THE BOX MAY BE CONSTRUCTED 150 (6) SHORT TO ALLOW FOR FIELD ADJUSTMENTS.

** 1.2m (4'-0") TO 2.4m (8'-0") - NO. 15 (NO. 5) REINF. BARS AT 300 (12) CTS. E.W.
2.4m (8'-0") TO 4.0m (13'-0") - NO. 15 (NO. 5) REINF. BARS AT 250 (10) CTS. E.W.
4.0m (13'-0") TO 4.6m (15'-0") - NO. 15 (NO. 5) REINF. BARS AT 200 (8) CTS. E.W.

*** 7 SPA. AT 200 mm (8") INLET SPECIAL = 3, 4
5 SPA AT 208 mm (7 5/8") INLET SPECIAL = 5, 6

**** 2 REBARS FOR INLET SPECIAL 3 & 4
4 REBARS FOR INELT SPECIAL 5 & 6

**NOTES**

ALL DIMENSIONS ARE IN MILLIMETERS (INCHES) UNLESS OTHERWISE NOTED.

TOP SLAB REINFORCEMENT TO BE EPOXY COATED BARS.

REVISED - 11-01-07

**INLET SPECIAL NO. 3, 4, 5, 6 REINFORCEMENT DETAIL 79.4e**

# TREE REPLACEMENT SCHEDULE

| CODE NUMBER | SCIENTIFIC NAME | COMMON NAME | SIZE | UNIT | QUANTITY |
|---|---|---|---|---|---|
| A2006514 | Quercus Bicolor | Swamp White Oak | 1-3/4 inch | Each | 10 |
| A2006714 | Quercus Macrocarpa | Bur Oak | 1-3/4 inch | Each | 10 |
| A2007114 | Quercus Rubra | Red Oak | 1-3/4 inch | Each | 10 |
| B2001114 | Cercis Canndensis | Eastern Redbud | 1-3/4 inch | Each | 10 |
| A2005114 | Juglans Nigra | Black Walnut | 1-3/4 inch | Each | 10 |

ALL DIMENSIONS ARE IN MILLIMETERS (INCHES) UNLESS OTHERWISE NOTED.

REVISED - 8-10-05

**TREE REPLACEMENT SCHEDULE 90.4**

# SUBGRADE REPLACEMENT

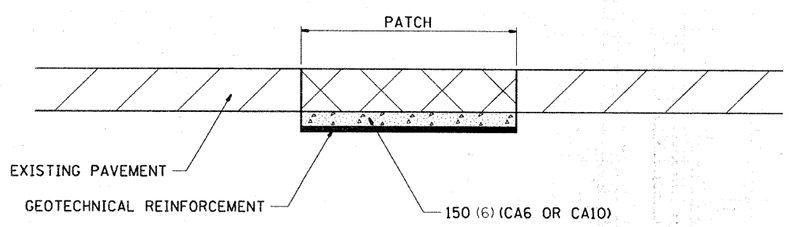


**NOTES:**

THE CA 6 OR CA 10 SHALL BE COMPACTED IN A MANNER APPROVED BY THE ENGINEER. IF THE MOISTURE CONTENT OF THE MATERIAL IS SUCH THAT COMPACTION SATISFACTORY TO THE ENGINEER CANNOT BE OBTAINED, SUFFICIENT WATER SHALL BE ADDED SO THAT SATISFACTORY COMPACTION CAN BE OBTAINED.

THE CA 6 OR CA 10 WILL BE PAID FOR AT THE CONTRACT UNIT PRICE PER CU YD FOR GRANULAR SUBGRADE REPLACEMENT

THE GEOTECHNICAL REINFORCEMENT WILL BE PAID FOR AT THE CONTRACT UNIT PRICE PER SQ YD FOR GEOTECHNICAL REINFORCEMENT

ALL DIMENSIONS ARE IN MILLIMETERS (INCHES) UNLESS OTHERWISE NOTED.

REVISED - 1-09-08

**SUBGRADE REPLACEMENT 97.4**

REVISED - ___
REVISED - ___
REVISED - ___
REVISED - ___

**REGION 2 / DISTRICT 2 STANDARD**

SCALE: 125.5966 / IN. SHEET NO. __ OF ___ SHEETS | STA. _____ TO STA. _____

| F.A.P RTE. | SECTION | COUNTY | TOTAL SHEETS | SHEET NO. |
|---|---|---|---|---|
| 505 | 115 RS-2 | WINNEBAGO | 120 | 69 |

CONTRACT NO. 64E89

FED. ROAD DIST. NO. _ | ILLINOIS | FED. AID PROJECT

PLOT DATE = Fri Oct 09 11:16:55 2020