STATE OF ILLINOIS
DEPARTMENT OF TRANSPORTATION

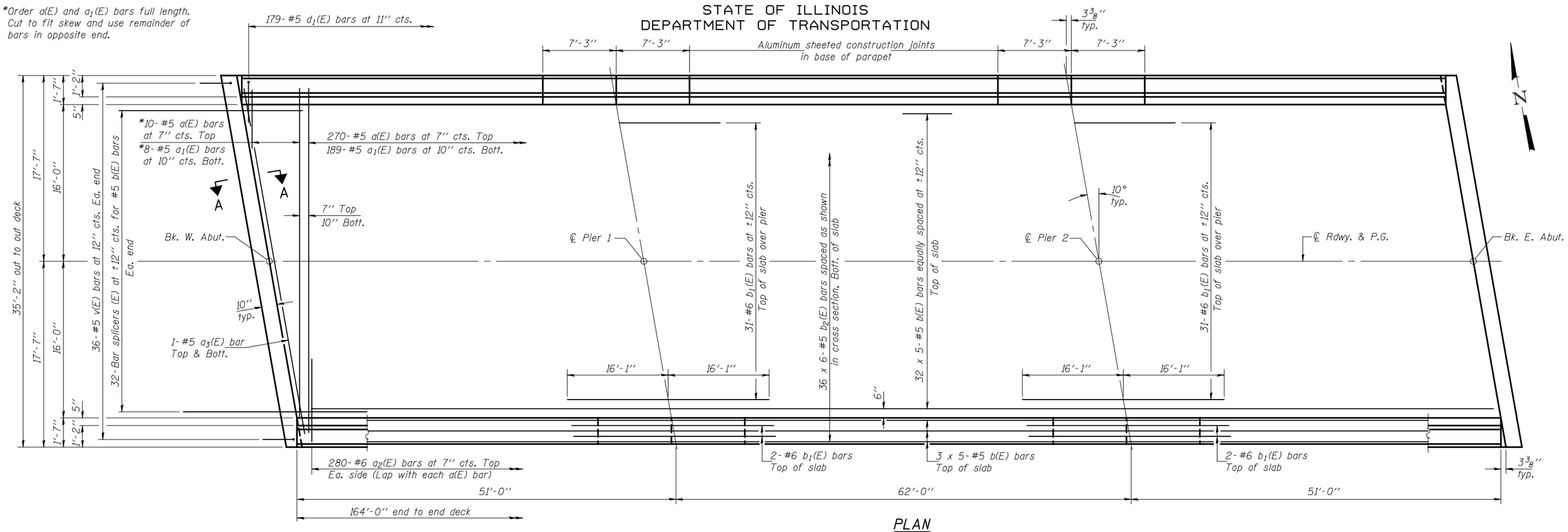

PLAN

MIN. BAR LAP
#5 bar = 2'-2''

Notes: See sheet 9 of 25 for superstructure details and Bill of Material.
Bars indicated thus 32 x 5-#5 etc. indicates 32 lines of bars with 5 lengths per line.
See sheet 9 of 25 for parapet reinforcement.
See sheet 10 of 25 for Section A-A.

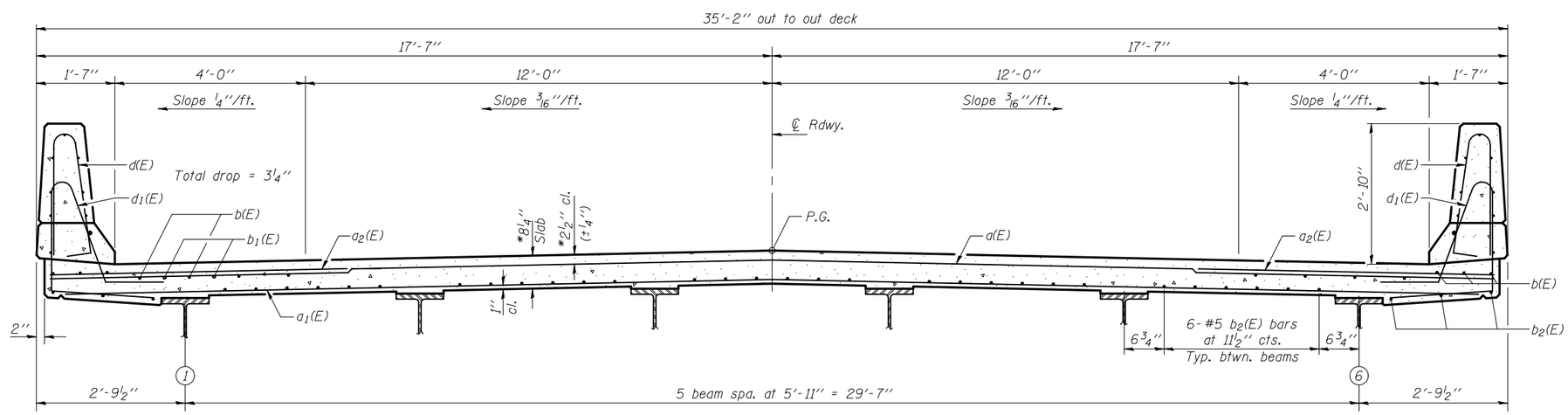

NEAR PIER

CROSS SECTION
(Looking east)

NEAR MIDSPAN

*Prior to grinding.

DESIGNED	D.P. Narielwala
CHECKED	S.M. Ryan
DRAWN	h.t. duong
CHECKED	DPN/SMR

November 25, 2009
EXAMINED Thomas J. Domagalski
ENGINEER OF BRIDGE DESIGN
PASSED Ralph E. Anderson
ENGINEER OF BRIDGES AND STRUCTURES

SUPERSTRUCTURE
STRUCTURE NO. 074-0086

SHEET NO. 8	F.A.S. RTE.	SECTION	COUNTY	TOTAL SHEETS	SHEET NO.
25 SHEETS	1517	12VBR-1	PIATT	168	93
			CONTRACT NO. 70388		
	FED. ROAD DIST. NO. _	ILLINOIS	FED. AID PROJECT		