| F.A.P. RTE. | SECTION | COUNTY | TOTAL SHEETS | SHEET NO. |
|---|---|---|---|---|
| 717 | 110BR | DEWITT | 40 | 13 |
| STA. 736+00 | | TO STA. 741+00 | | |
| FED. ROAD DIST. NO. 5 | ILLINOIS | FED. AID PROJECT | | |

SHEET 6 OF 14 SHEETS

**CONTRACT NO. 90932**

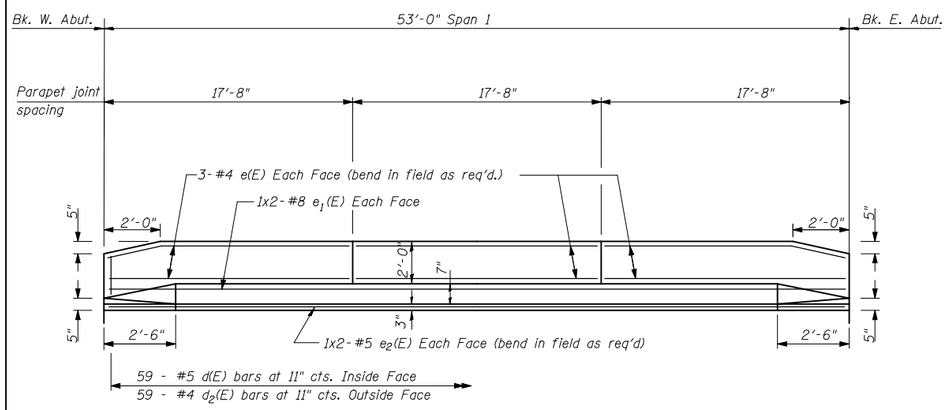


## INSIDE ELEVATION OF PARAPET

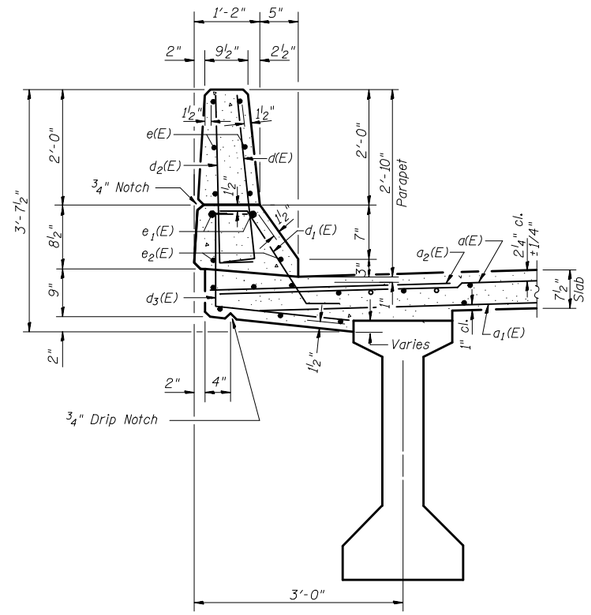


## SECTION THRU PARAPET

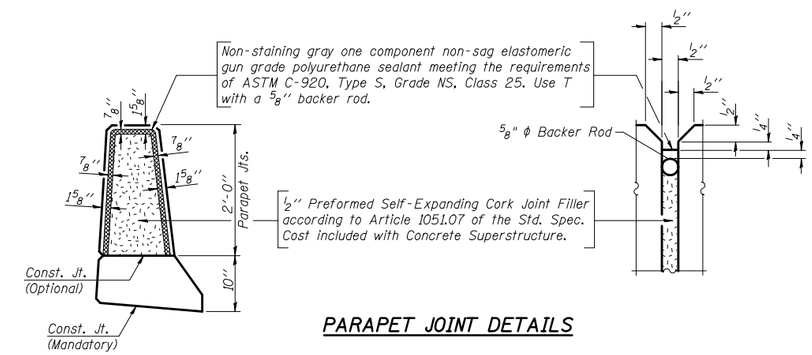


## PARAPET JOINT DETAILS

## SUPERSTRUCTURE BILL OF MATERIAL

| Bar | No. | Size | Length (ft) | Shape |
|---|---|---|---|---|
| a(E) | 160 | #5 | 17'-3" | |
| $a_1$(E) | 128 | #5 | 16'-6" | |
| $a_2$(E) | 82 | #6 | 6'-0" | |
| | | | | |
| b(E) | 76 | #5 | 27'-2" | |
| $b_1$(E) | 93 | #5 | 18'-8" | |
| | | | | |
| d(E) | 118 | #5 | 3'-0" | |
| $d_1$(E) | 106 | #5 | 2'-5" | |
| $d_2$(E) | 118 | #4 | 3'-0" | |
| $d_3$(E) | 118 | #4 | 3'-9" | |
| $d_4$(E) | 12 | #5 | 2'-2" | |
| | | | | |
| e(E) | 36 | #4 | 17'-5" | |
| $e_1$(E) | 8 | #8 | 28'-1" | |
| $e_2$(E) | 8 | #5 | 27'-2" | |
| | | | | |
| m(E) | 8 | #6 | 16'-4" | |
| $m_1$(E) | 12 | #6 | 17'-3" | |
| $m_2$(E) | 24 | #6 | 7'-6" | |
| $m_3$(E) | 8 | #6 | 4'-0" | |
| $m_4$(E) | 4 | #6 | 1'-11" | |
| $m_5$(E) | 4 | #6 | 1'-10" | |
| | | | | |
| s(E) | 72 | #5 | 4'-9" | |
| $s_1$(E) | 62 | #4 | 9'-8" | |
| | | | | |
| v(E) | 68 | #5 | 3'-2" | |
| | | | | |
| Reinforcement Bars Epoxy Coated | | | Lb | 13880 |
| Concrete Superstructure | | | Cu Yd | 77.3 |

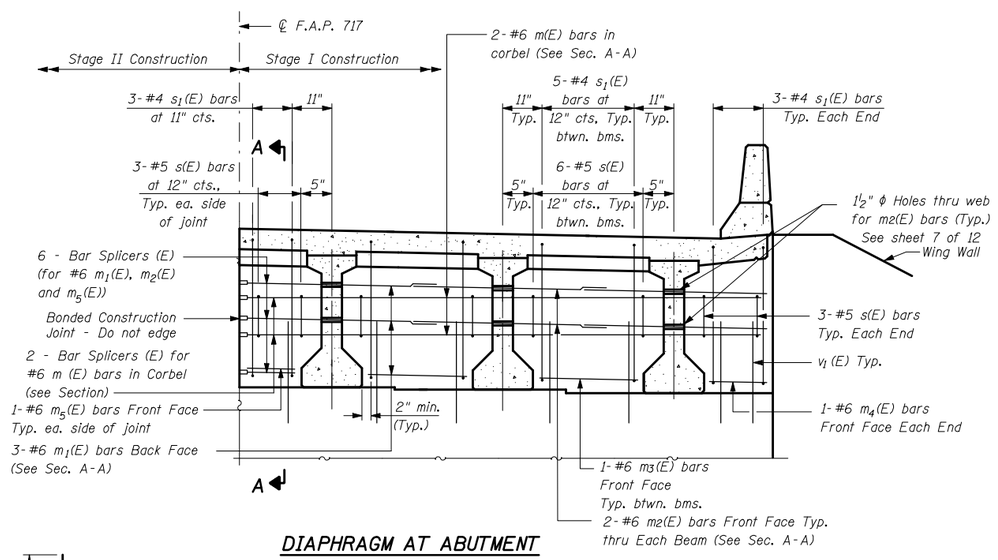


## DIAPHRAGM AT ABUTMENT

(Symm. about ℄)
(Looking East)




## SECTION A-A

## MIN. BAR LAPS

#4 bar = 1'-4"
#5 bar = 1'-8"
#6 bar = 2'-9"
#8 bar = 3'-5"

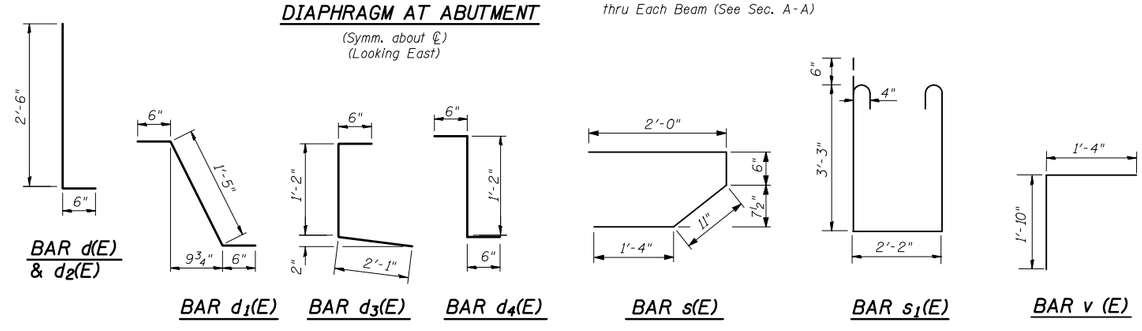


Notes:
Reinforcement bars in diaphragm are billed with superstructure.
Concrete in diaphragm is included with Concrete Superstructure.
Bars indicated thus 1x2-#5 etc. indicates 1 line of bar with 2 lengths per line.

| REVISIONS NAME | DATE |
|---|---|
| | |

ILLINOIS DEPARTMENT OF TRANSPORTATION
SUPERSTRUCTURE DETAILS
IL. ROUTE 10 OVER UN-NAMED CREEK
FAP RTE. 717 SECTION 110BR
STA. 738+60
DEWITT COUNTY STR. No. 020-0061
SCALE: N.T.S. DRAWN BY
DATE MAY 2009 CHECKED BY MJS

TUG PROJ.= $PROJNO$
PLOT DATE = 10/15/2009 $TIME$
FILE NAME = $FILE$

THE UPCHURCH GROUP, INC.