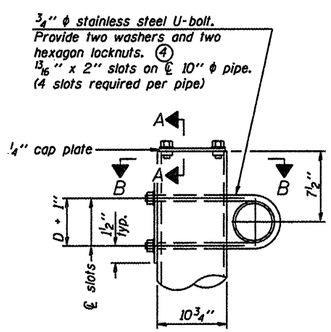

DETAIL A

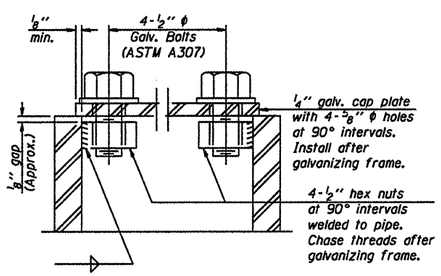

SECTION A-A

As an alternate to bolts, may use galvanized drive-fit caps installed after galvanizing frame.

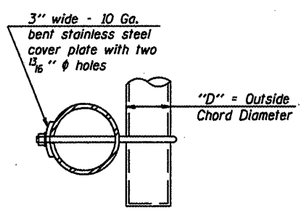

SECTION B-B

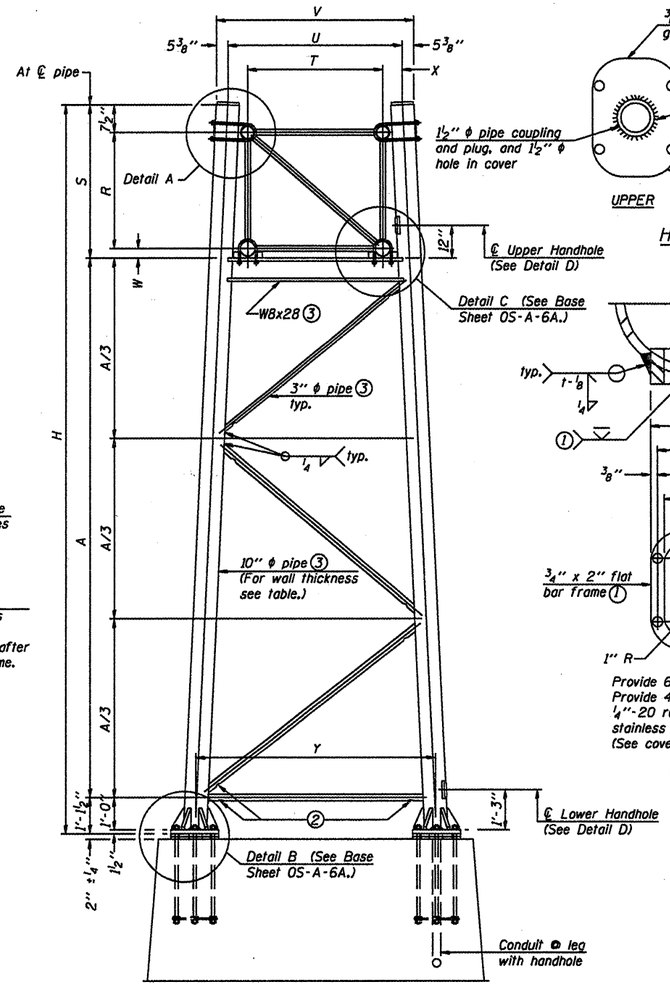

For Foundation Details, see base sheet OS-F3 (Spread Footing) or OS4-F3 (Drilled Shaft).

SIDE ELEVATION

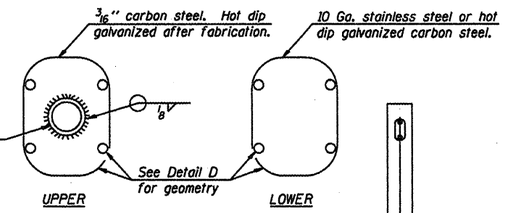

HANDHOLE COVERS

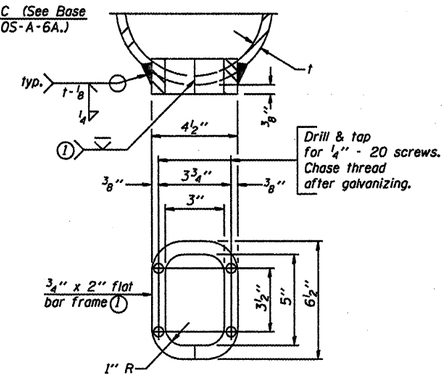

Provide 6 1/2" x 4 1/2" cover. Provide 4-5/16" ϕ holes in cover for 1/4"-20 round head hot dip galvanized or stainless steel machine screws. (See cover details)

DETAIL D

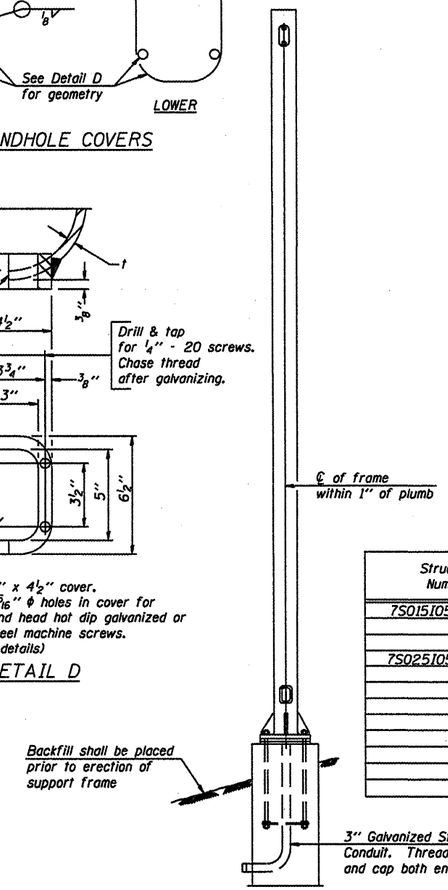

END ELEVATION

Support Design Loads: See Base Sheet OS-A-1 for design and loading criteria.
Load combinations checked include deadload plus:
a) 100% wind normal to sign, 20% parallel to sign
b) 60% wind normal to sign, 30% parallel to sign

(1) In lieu of fabricated handhole frame as shown, may cut from 2" plate (rolling direction vertical). All cut faces to be ground to ANSI Roughness of 500 μin or less.

(2) Galvanizing vent holes of adequate size shall be provided on underside at each end of bracing pipes. Alternately, holes may be provided in wall of pipe column. All vent holes shall be drilled and de-burred, typ.

(3) Steel pipe, plate, carbon steel handhole covers and rolled sections shall be hot dip galvanized after fabrication. Painting is not permitted. See Base Sheet OS-A-1.

(4) See General Notes for fasteners.

(5) Dimensions shown are based on selection criteria in the Sign Structures Manual. Nonstandard applications must have dimensions verified or amended as appropriate.

(6) "H" based on 15'-0" or actual sign height, whichever is greater.

The Contractor and the Engineer shall field verify the height of the new foundations. If the height of the new foundations is lower than the existing foundations, the height of the end supports may need to be increased to maintain the proper height of the sign structure above the roadway.

Structure Number	Station	Support Left	Support Right	Truss Type	Pipe Wall Thickness	H (6)	A
7S015I057L189.9	802 + 00	X		I-A	0.279	25'-6 3/4"	18'-11 3/4"
			X		0.279	28'-11 3/4"	22'-4 3/4"
7S025I057R162.9	2333 + 50	X		II-A	0.365(Std)	28'-10 1/2"	21'-4 1/4"
			X			26'-10 1/2"	19'-4 1/4"

10" ϕ PIPE TRUSS SUPPORT FRAME

Truss Type	Dimensions R	S	T	U	V	W	X	Y
I-A	4'-6"	5'-5 1/2"	4'-0"	5'-6"	6'-4 3/4"	4"	9"	8'-3"
II-A (5)	5'-3"	6'-3 1/4"	4'-6"	6'-1"	6'-11 3/4"	4 3/4"	9 1/2"	8'-3"

NUMBER	REVISION	DATE

DESIGNED -
CHECKED -
DRAWN -
CHECKED -

- 20
EXAMINED
ENGINEER OF BRIDGE DESIGN
PASSED
ENGINEER OF BRIDGES AND STRUCTURES

OS-A-6 5/16/08

OVERHEAD SIGN STRUCTURES
SUPPORT FRAME for ALUMINUM TRUSS

District 7
Overhead Sign Structure
Replacement