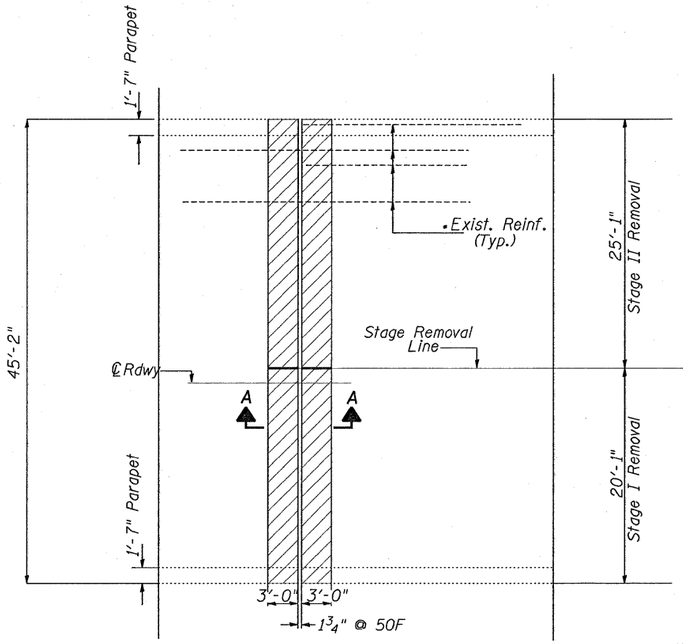

PLAN SHOWING CONCRETE REMOVAL AT PIER 1,3 AND 4

WESTBOUND BRIDGE

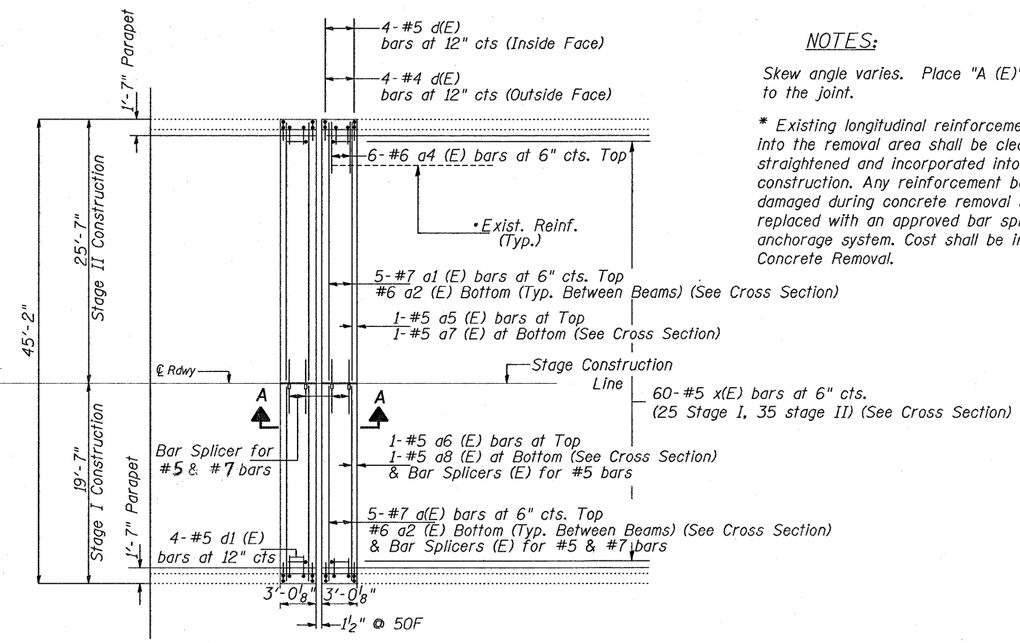

PLAN SHOWING CONCRETE REPLACEMENT AT PIER 1, 3 AND 4

NOTES:

Skew angle varies. Place "A (E)" bars parallel to the joint.

* Existing longitudinal reinforcement extending into the removal area shall be cleaned, straightened and incorporated into the new construction. Any reinforcement bars that are damaged during concrete removal shall be replaced with an approved bar splicer or anchorage system. Cost shall be included with Concrete Removal.

TOTAL BILL OF MATERIAL

Description	Unit	Quantity
Concrete Removal	Cu. Yd.	76.0
Concrete Superstructure	Cu. Yd.	84.5
Reinforcement Bars, Epoxy Coated	Pound	17,560
Bar Splicers	Each	84
Bridge Deck Grooving	Sq. Yd.	2597
Deck Slab Repair (Full Depth, Type II)	Sq. Yd.	9.6
Polymer Concrete	Cu. Ft.	9.2
Bridge Deck Latex Concrete Overlay, 2¼" inches	Sq. Yd.	2558
Bridge Deck Hydro-scarification ½"	Sq. Yd.	2558
Preformed Joint Strip Seal	Foot	264
Structural Repair of Concrete </= 5"	Sq. Yd.	3054
Structural Repair of Concrete > 5"	Sq. Yd.	174
Temporary Shoring and Cribbing	Each	3

Reinforcement bars designated (E) shall be epoxy coated.

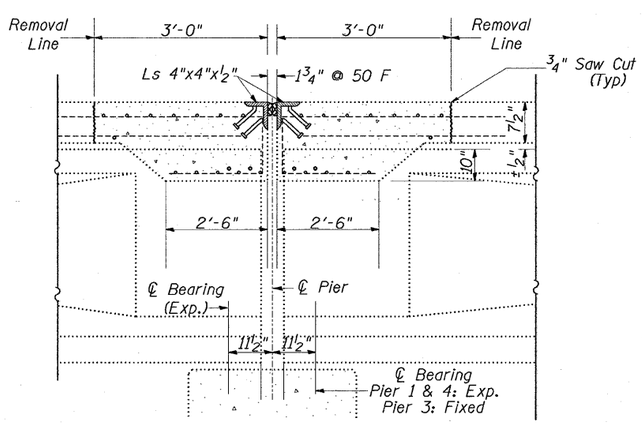

PIERS 1,3 & 4 EXISTING

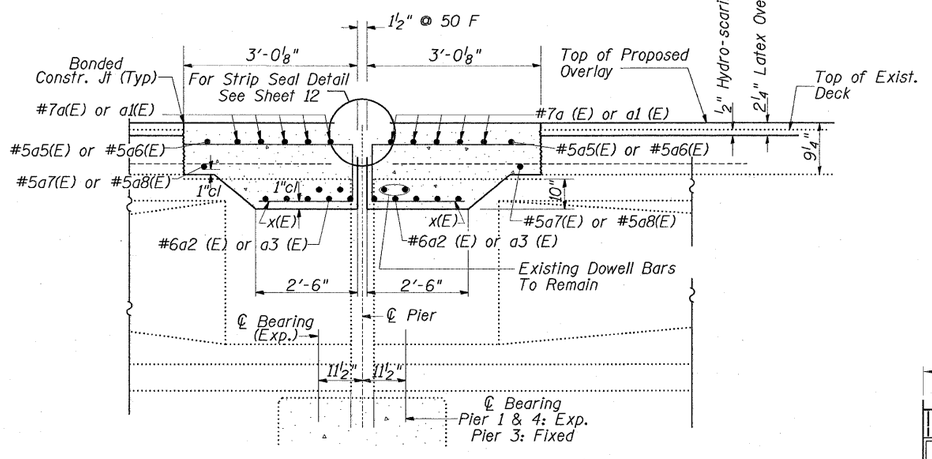

PIERS 1,3 & 4 PROPOSED

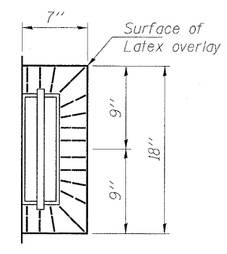

TOP PLAN

Slope Latex 2:1 at drains

SECTION A-A

STATE OF ILLINOIS
RALPH E. ANDERSON
081-004625
SPRINGFIELD
LICENSED STRUCTURAL ENGINEER

Expires Nov. 30, 2010

FILE NAME = c:\projects\dl20207\design_aa.dgn	USER NAME = midyjo	DESIGNED -	REVISED -	STATE OF ILLINOIS DEPARTMENT OF TRANSPORTATION	JOINT DETAILS AT PIERS 1, 3 & 4	F.A.I RTE.	SECTION	COUNTY	TOTAL SHEETS / SHEET NO.
		DRAWN -	REVISED -			80	99-1-B-I-2	WILL	21 / 10
	PLOT SCALE = 53.9884 ' / IN.	CHECKED -	REVISED -					CONTRACT NO. 60D66	
	PLOT DATE = 10/30/2008	DATE -	REVISED -		SCALE: SHEET NO. OF SHEETS STA. TO STA.	FED. ROAD DIST. NO.	ILLINOIS	FED. AID PROJECT	