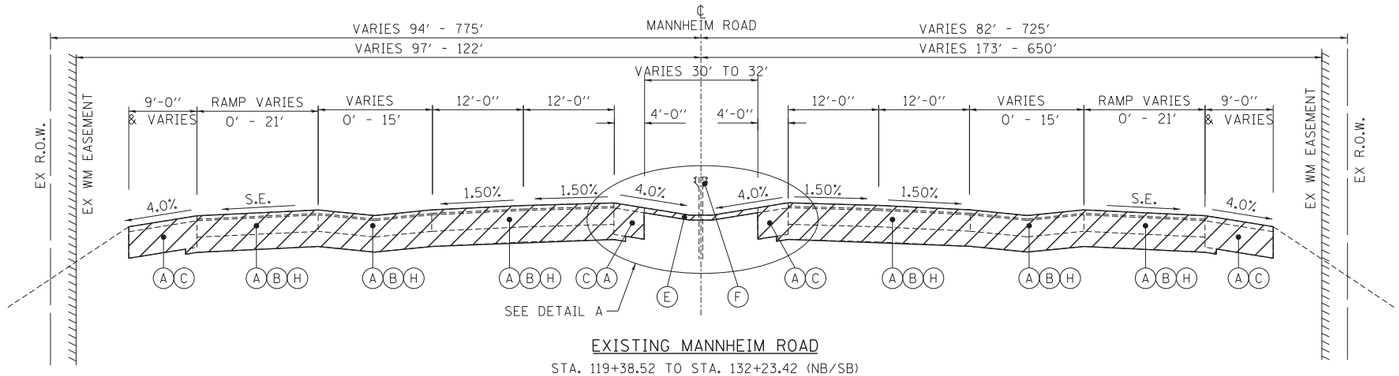

EXISTING MANNHEIM ROAD

STA. 119+38.52 TO STA. 132+23.42 (NB/SB)
STA. 142+11.87 TO STA. 145+28.36 (NB/SB)
STA. 152+69.12 TO STA. 159+05.66 (NB/SB)

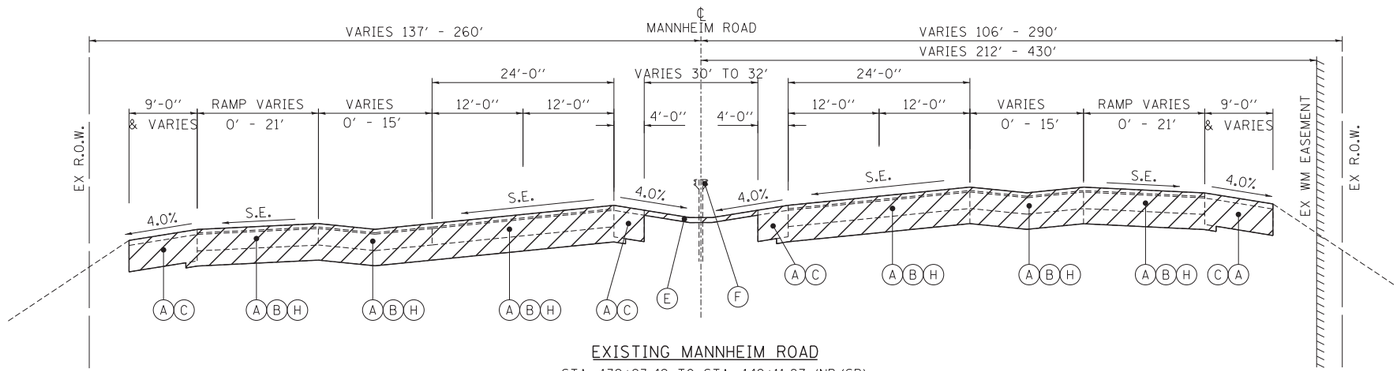

EXISTING MANNHEIM ROAD

STA. 132+23.42 TO STA. 142+11.87 (NB/SB)
STA. 145+28.36 TO STA. 152+69.12 (NB/SB)

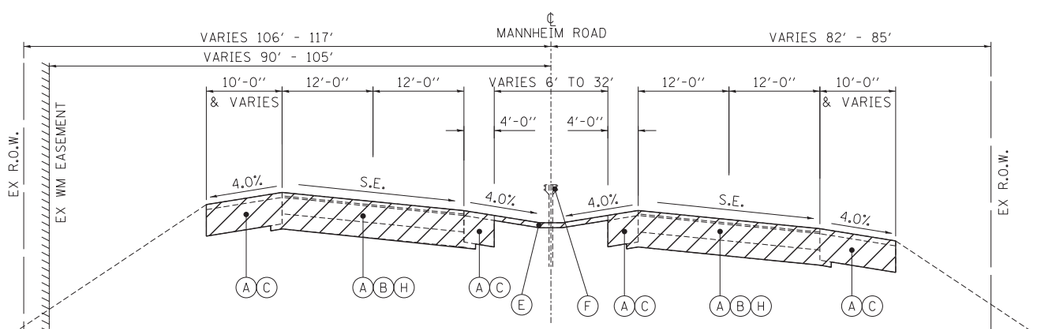

EXISTING MANNHEIM ROAD

STA. 159+05.66 TO STA. 173+10.41 (NB/SB)

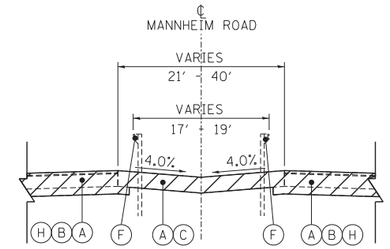

DETAIL A

EXISTING MANNHEIM ROAD

STA. 119+38.52 TO STA. 121+34.23 (NB/SB)

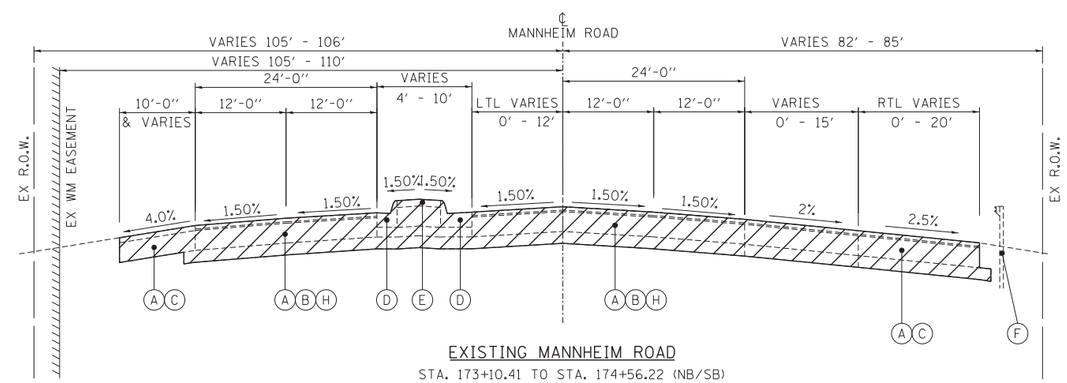

EXISTING MANNHEIM ROAD

STA. 173+10.41 TO STA. 174+56.22 (NB/SB)

EXISTING LEGEND:

= REMOVAL

- (A) PORTLAND CEMENT CONCRETE PAVEMENT (VARIES 8" TO 12.75")
- (B) HMA PAVEMENT (VARIES 2.5" TO 8.5")
- (C) HMA SHOULDERS (VARIES 3" & VARIES)
- (D) CONCRETE CURB AND GUTTER
- (E) CONCRETE MEDIAN SURFACE
- (F) GUARDRAIL
- (G) AGGREGATE SHOULDER
- (H) SUB-BASE GRANULAR MATERIAL (VARIES 1.25" TO 13.25")
- (I) PAVED DITCH
- (J) HMA SURFACE REMOVAL (4" - COLD MILL)
- (K) CONCRETE MEDIAN
- (L) PORTLAND CEMENT CONCRETE SIDEWALK (VARIES X" TO X")

TYP-01

FILE NAME = $FILEL$	USER NAME = $USER$	DESIGNED - RJS	REVISED -	STATE OF ILLINOIS DEPARTMENT OF TRANSPORTATION	EXISTING MANNHEIM ROAD TYPICAL SECTIONS	F.A. RTE.	SECTION	COUNTY	TOTAL SHEETS / SHEET NO.
		DRAWN - HDU	REVISED -				0105-WRS	COOK	537 / 32
TENG & ASSOCIATES, INC. ENGINEERS/ARCHITECTS/PLANNERS CHICAGO, ILLINOIS	PLOT SCALE = $SCALE$	CHECKED - MCD	REVISED -					CONTRACT NO. 60P35	
	PLOT DATE = $DATE$	DATE - 10/19/12	REVISED -		SCALE: 1"=10' / SHEET NO. OF SHEETS / STA. 119+38.52 TO STA. 174+56.22			ILLINOIS FED. AID PROJECT	

..\DI60P35-TYPICAL.DGN,..\DI60P35-BORDER7.DGN,..\DI60P35-TYPICAL-LEGEND.DGN
10-05-2012,14:45:50 BAJZEKAJ F:\DOC.EXP\CH\0080258\-02\COMMON\PSETS\TEMPSHEETPLOT\DI60P35-SHT-TYPICAL_01.DGN