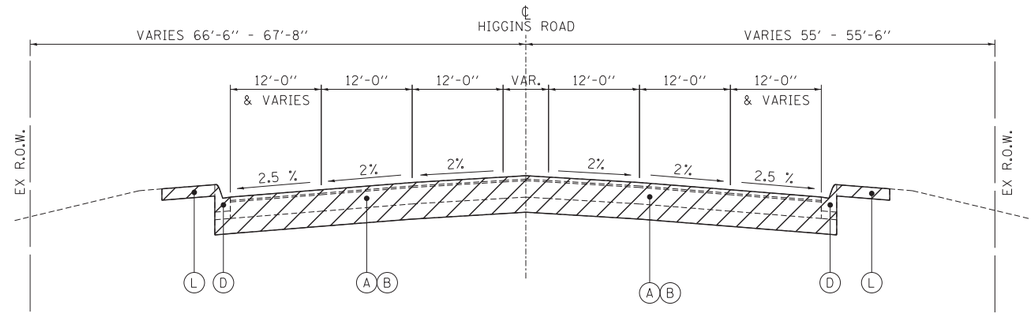

EXISTING HIGGINS ROAD

STA. 494+26.00 TO STA. 494+69.50 (EB/WB)
STA. 496+15.62 TO STA. 496+55.04 (EB/WB)
STA. 504+62.79 TO STA. 505+95.00 (EB/WB)

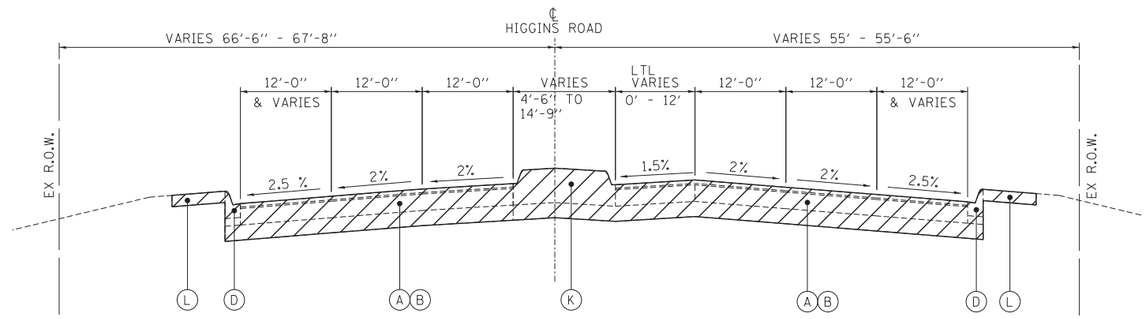

EXISTING HIGGINS ROAD

STA. 494+69.50 TO STA. 496+15.62 (EB/WB)
STA. 496+55.04 TO STA. 500+00.35 (EB/WB)

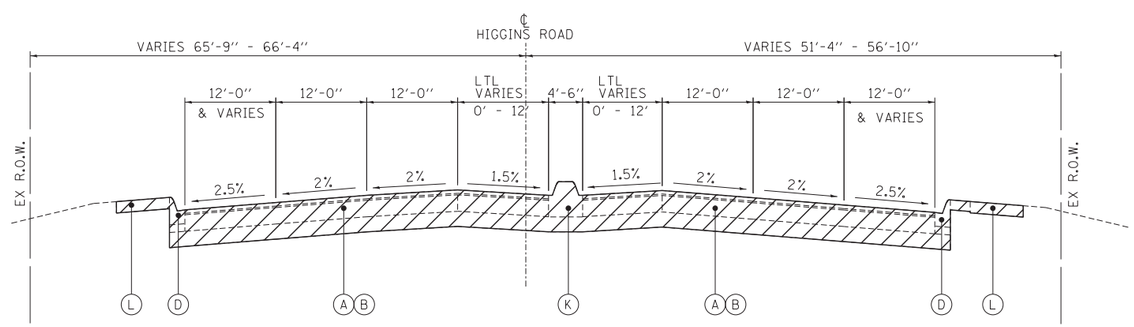

EXISTING HIGGINS ROAD

STA. 500+00.35 TO STA. 504+62.79 (EB/WB)

EXISTING LEGEND:

= REMOVAL

- (A) PORTLAND CEMENT CONCRETE PAVEMENT (VARIES 8" TO 12.75")
- (B) HMA PAVEMENT (VARIES 2.5" TO 8.5")
- (C) HMA SHOULDERS (VARIES 3" & VARIES)
- (D) CONCRETE CURB AND GUTTER
- (E) CONCRETE MEDIAN SURFACE
- (F) GUARDRAIL
- (G) AGGREGATE SHOULDER
- (H) SUB-BASE GRANULAR MATERIAL (VARIES 1.25" TO 13.25")
- (I) PAVED DITCH
- (J) HMA SURFACE REMOVAL (4" - COLD MILL)
- (K) CONCRETE MEDIAN
- (L) PORTLAND CEMENT CONCRETE SIDEWALK (VARIES X" TO X")

TYP-03

FILE NAME = $FILE$	USER NAME = $USER$	DESIGNED - RJS	REVISED -	STATE OF ILLINOIS DEPARTMENT OF TRANSPORTATION	EXISTING HIGGINS ROAD TYPICAL SECTIONS	F.A. RTE.	SECTION	COUNTY	TOTAL SHEETS	SHEET NO.
		DRAWN - HDU	REVISED -				0105-WRS	COOK	537	34
TENG & ASSOCIATES, INC. ENGINEERS/ARCHITECTS/PLANNERS CHICAGO, ILLINOIS	PLOT SCALE = $SCALE$	CHECKED - MCD	REVISED -					CONTRACT NO. 60P35		
	PLOT DATE = $DATE$	DATE - 10/19/12	REVISED -		SCALE: 1"=10' SHEET NO. OF SHEETS STA. 494+26.00 TO STA. 505+95.00			ILLINOIS FED. AID PROJECT		

-\D160P35-TYPICAL-LEGEND.DGN,..\D160P35-TYPICAL.DGN,..\D160P35-BORDER1.DGN
10-05-2012,14:45:51 BAJZEKKJ F:\DOC.EXP\CH-#0082584-02\COMON\PSEET\TEMPSHEET\PLOT\D160P35-SHT-TYPICAL_08.DGN