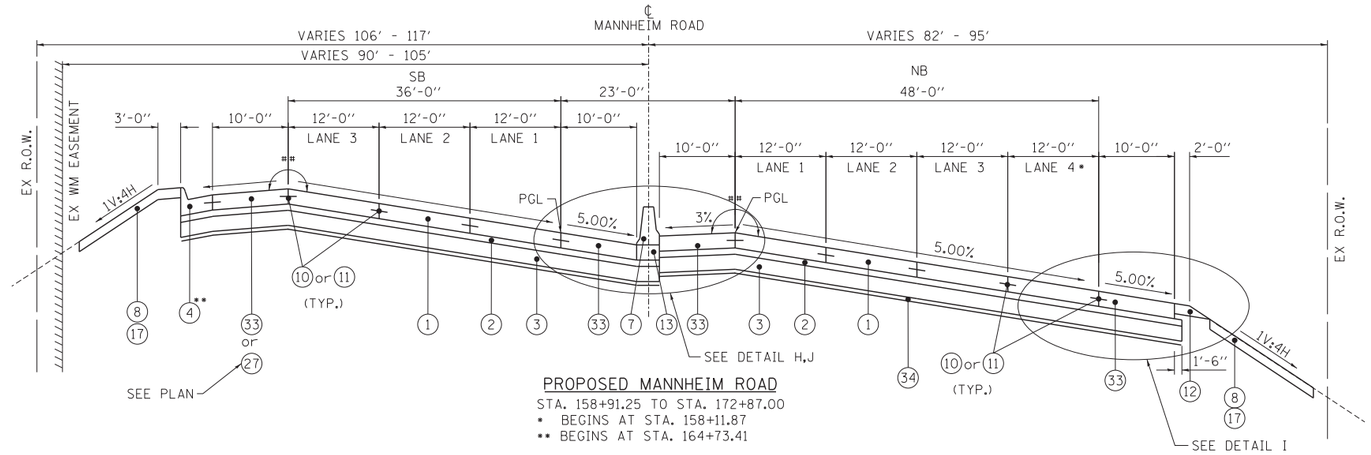

PROPOSED MANNHEIM ROAD
STA. 158+91.25 TO STA. 172+87.00
* BEGINS AT STA. 158+11.87
** BEGINS AT STA. 164+73.41

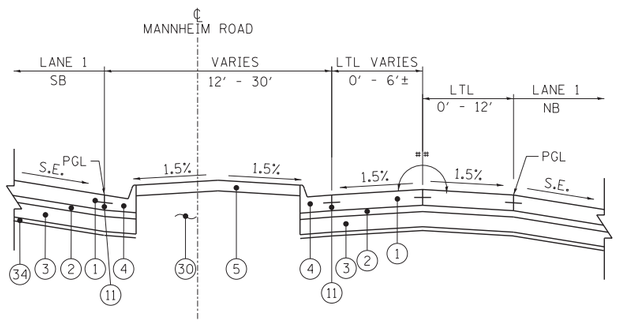

DETAIL H
PROPOSED MANNHEIM ROAD
STA. 165+86.69 TO STA. 170+72.85

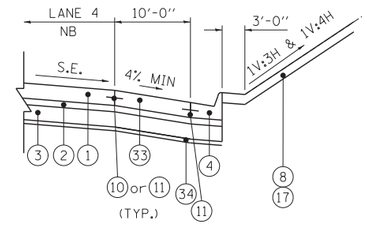

DETAIL I
PROPOSED MANNHEIM ROAD
STA. 164+73.43 TO STA. 172+87.00

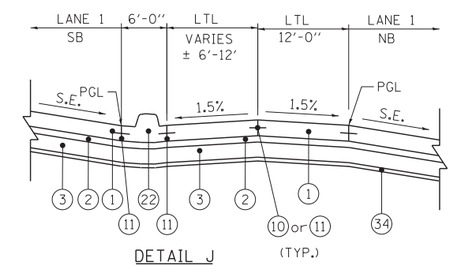

DETAIL J
PROPOSED MANNHEIM ROAD
STA. 170+72.85 TO STA. 172+87

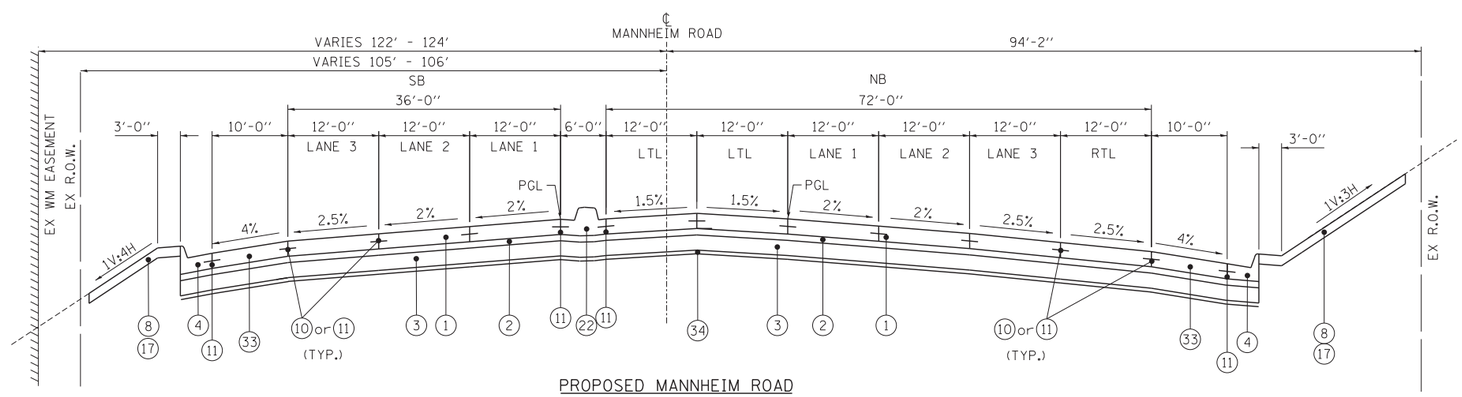

** 8% MAX. ROLLOVER
BETWEEN TRAVEL LANE AND SHOULDER

PROPOSED MANNHEIM ROAD
STA. 172+87 TO STA. 174+37.80

PROPOSED LEGEND:

[ ] = INCLUDED IN THE COST OF PAVEMENT, BASE COURSE, CURB AND GUTTER, MEDIAN, CONCRETE BARRIER, OR CONCRETE BARRIER BASE

1. PORTLAND CEMENT CONCRETE PAVEMENT 10 3/4" JOINTED
2. STABILIZED SUBBASE (HMA), 4 1/2"
3. AGGREGATE SUBGRADE IMPROVEMENT 12"
4. COMBINATION CONCRETE CURB AND GUTTER, TYPE M-4.24
5. CONCRETE MEDIAN SURFACE, 4 INCH
6. COMBINATION CONCRETE CURB AND GUTTER, TYPE B-6.12
7. CONCRETE BARRIER, DOUBLE FACE, 32 INCH HEIGHT
8. TOPSOIL FURNISH AND PLACE, 6"
9. CONCRETE BARRIER, SINGLE FACE, 32 INCH HEIGHT
10. LONGITUDINAL SAWED JOINT WITH NO. 6 TIE BARS @ 30" CTS
11. LONGITUDINAL CONSTRUCTION JOINT WITH NO. 6 TIE BARS @ 24" CTS
12. AGGREGATE SHOULDERS, TYPE B 6"
13. CONCRETE BARRIER BASE
14. CONCRETE MEDIAN, TYPE SB 6.12
15. COMBINATION CONCRETE CURB AND GUTTER, TYPE B-6.24
16. PORTLAND CEMENT CONCRETE SIDEWALK 5 INCH
17. SEEDING (SEE LANDSCAPE PLANS)
18. NO. 6 TIE BARS @ 24" CTS
19. POLYMERIZED BITUMINOUS MATERIALS (PRIME COAT)
20. POLYMERIZED HMA SURFACE, MIX "F", N90, 1-3/4"
21. POLYMERIZED HMA BINDER, IL-19.0, N90, 2-1/4"
22. CONCRETE MEDIAN, TYPE SM (SPECIAL)
23. PORTLAND CEMENT CONCRETE BASE COURSE WIDENING 10"
24. CONCRETE MEDIAN, TYPE SB (SPECIAL)
25. HMA SURFACE REMOVAL, VARIABLE DEPTH
26. STRIP REFLECTIVE CRACK CONTROL TREATMENT
27. HOT-MIX ASPHALT SHOULDERS, 10-3/4"
28. HMA SURFACE COURSE, MIX "D", N70 1 1/2"
29. 4" PVC (SURVELLIANCE)
30. AGGREGATE FILL
31. SAND FILL
32. CORRUGATED MEDIAN
33. PORTLAND CEMENT CONCRETE SHOULDERS 10 3/4"
34. GEOTECHNICAL FABRIC FOR GROUND STABILIZATION

TYP-07

FILE NAME = $FILE$	USER NAME = $USER$	DESIGNED - RJS	REVISED -	STATE OF ILLINOIS DEPARTMENT OF TRANSPORTATION	PROPOSED MANNHEIM ROAD TYPICAL SECTIONS	F.A. RTE.	SECTION	COUNTY	TOTAL SHEETS	SHEET NO.
		DRAWN - HDU	REVISED -				0105-WRS	COOK	537	38
TENG & ASSOCIATES, INC. ENGINEERS/ARCHITECTS/PLANNERS CHICAGO, ILLINOIS	PLOT SCALE = $SCALE$	CHECKED - MCD	REVISED -					CONTRACT NO. 60P35		
	PLOT DATE = $DATE$	DATE - 10/19/12	REVISED -		SCALE: 1"=10' SHEET NO. OF SHEETS STA. 158+64.80 TO STA. 173+51.74		ILLINOIS	FED. AID PROJECT		

..\D160P35-TYPICAL.DGN, ..\D160P35-BORDERT.DGN, ..\D160P35-TYPICAL-LEGEND.DGN
10-23-2012, 11:52:11 MGHAMMAH F:\DOC_EXP\CH-#0801294-N2\COMMON\PSET\TEMPSHEET\PLOT\D160P35-SHT-TYPICAL_04.DGN