SIGN INSTALLATION SCHEDULE

PROPOSED LOCATION	SIGN NUMBER	SIZE		SIGN PANEL			SUPPORT												FOUNDATION	
		WIDTH FT.	HEIGHT FT.	TYPE-1 SF	TYPE-2 SF	TYPE-3 SF	X1	X2	X3	X4	Y1	Y2	Y3	Y4	NO.	POST	LENGTH FT.	WEIGHT LB	MIN. DEPTH FT	CONCRETE CY
11+40.00	NB-BC-EX-701	13.0	11.0			143.0	5.0	7.2	15.4		7.0	6.0	5.5		2.0	W8X18	37.5	831.0	6.0	1.4
08+20.00	WB-BC-MP-706	15.2	8.9			135.3	2.0	2.0	2.0		7.0	6.3	6.3		2.0	W6X15	24.0	732.0	6.0	1.4
52+05.00	NB-ZK-MP-716	12.0	8.1			97.2	2.0	4.4	11.6		7.0	6.3	6.3		2.0	W6X15	34.0	666.0	6.0	1.4
61+91.00	EB-ZK-MP-721	8.2	6.3			51.7	2.0	3.6	8.5		7.0	13.3	15.8		2.0	W6X15	29.1	417.9	6.0	1.4
125+20.00	SB-MAN-EX-730	12.0	9.0			108.0	16.0	17.6	22.2		7.0	15.0	16.0		2.0	W6X15	31.0	1064.0	6.0	2.4
131+25.00	SB-MAN-EX-740	7.8	5.9			45.7	16.0	18.4	25.6		7.0	19.5	20.5		2.0	W10X22	40.0	628.5	6.5	1.4
142+65.00	NB-MAN-MP-753	13.2	4.6			60.7	16.0	18.6	26.6		7.0	13.5	14.5		2.0	W6X15	28.0	576.0	6.0	1.4
144+25.00	SB-MAN-EX-755	11.0	9.0			99.0	16.0	18.2	24.8		7.0	16.0	17.0		2.0	W8X18	33.0	750.0	6.0	1.4
152+35.00	NB-MAN-MP-761	8.4	4.5			37.8	16.0	17.7	22.7		7.0	13.5	14.5		2.0	W6X15	28.0	576.0	6.0	1.4
158+65.00	SB-MAN-EX-766	12.0	11.5			138.0	16.0	18.4	25.6		7.0	20.0	21.0		2.0	W10X26	41.0	1262.0	7.0	3.0
159+65.00	NB-MAN-MP-767	13.3	6.6			87.8	16.0	18.7	26.6		7.0	14.5	15.5		2.0	W6X15	30.0	606.0	6.0	1.4
173+85.00	SB-MAN-MP-778	12.0	5.5			66.0	16.0	18.4	25.6		7.0	14.0	15.0		2.0	W6X15	29.0	591.0	6.0	1.4
173+85.00	NB-MAN-MP-779	12.0	5.5			66.0	16.0	18.4	25.6		7.0	14.0	15.0		2.0	W6X15	29.0	0.0	6.0	0.0
175+55.00	SB-MAN-EX-782	11.5	8.1			93.2	1.0	3.3	10.2		7.0	14.0	14.0		2.0	W6X15	28.0	576.0	6.0	1.4
179+60.00	SB-MAN-MP-788	12.0	5.5			66.0	1.0	3.4	10.6		7.0	10.0	11.0		2.0	W6X15	21.0	471.0	6.0	1.4
	TOTALS			0.0	0.0	1295.3												9747.4		22.2

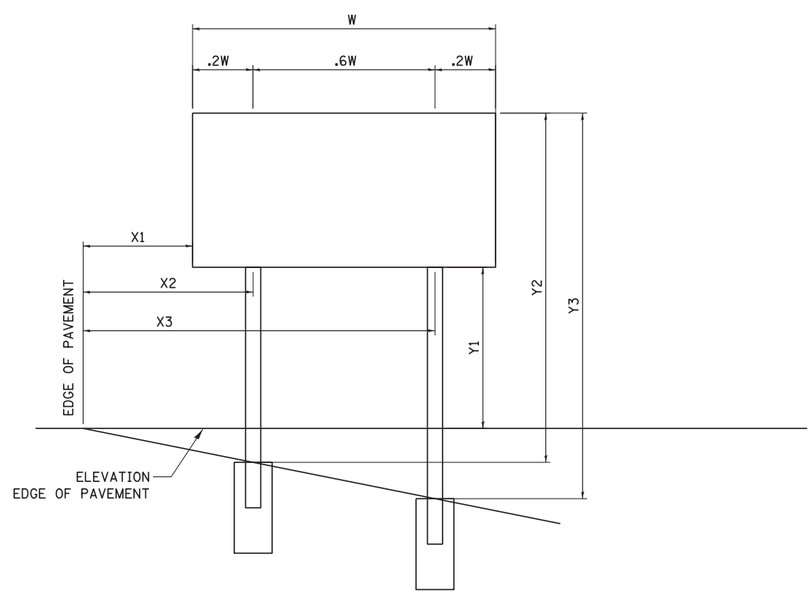

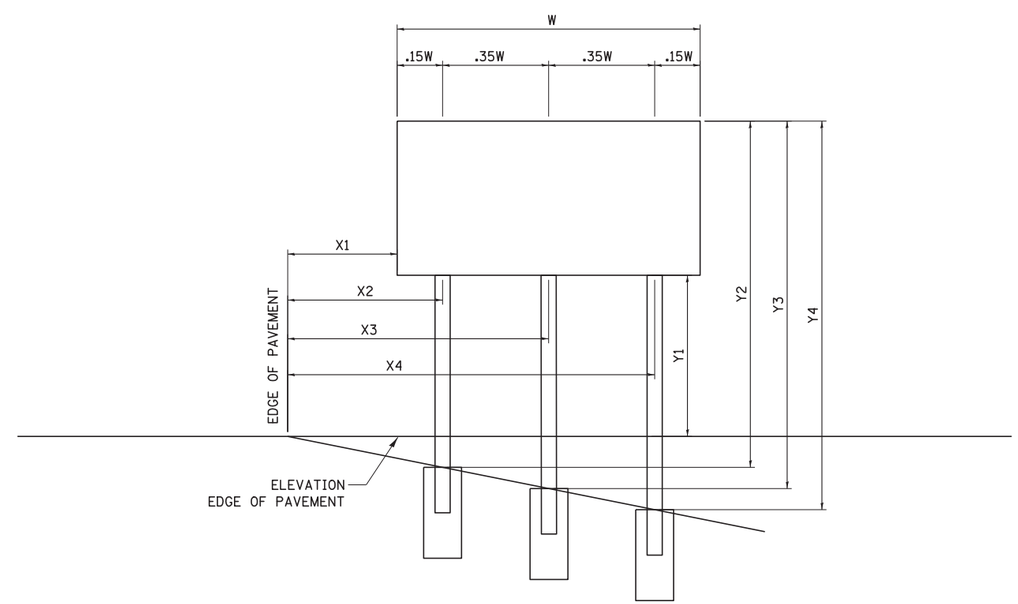

SGN–DET–02

Globetrotters® Engineering Corporation ENGINEERS ARCHITECTS 300 South Wacker Drive Chicago, Illinois 60606	USER NAME = mkosir	DESIGNED	REVISED -	STATE OF ILLINOIS DEPARTMENT OF TRANSPORTATION	GROUND MOUNTED SIGNS
		DRAWN	REVISED -		
	PLOT SCALE = 10:1	CHECKED	REVISED -		
	PLOT DATE = 23-OCT-2012	DATE 10/19/12	REVISED -		SCALE: 1" = 10' SHEET NO. 2 OF 2 SHEETS STA. TO STA.

F.A.P. RTE.	SECTION	COUNTY	TOTAL SHEETS	SHEET NO.
330	0105-WRS	COOK	537	217
		CONTRACT NO. 60P35		
	ILLINOIS	FED. AID PROJECT		

FILE NAME = IP_PWP:dms47849\D160P35-sht-sign-details.dgn