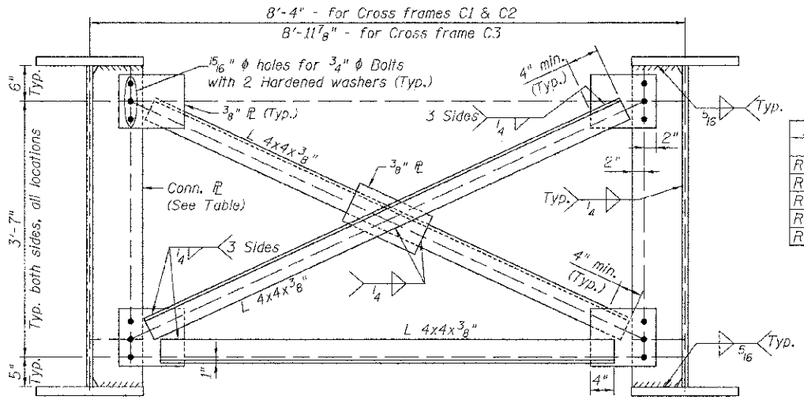

TYPICAL INTERIOR CROSS FRAME - C1 (72 REQUIRED)
CROSS FRAMES FOR C2 & C3 ARE SIMILAR
(C2 18 REQUIRED AND C3 9 REQUIRED)

INTERIOR GIRDER REACTION TABLE			
		Abut.	Pier
R_{DC1}	(k)	67.31	253.07
R_{DC2}	(k)	10.36	36.91
R_{DW}	(k)	14.57	51.91
R_{LL+IM}	(k)	98.21	167.82
R_{Total}	(k)	190.44	509.71

CROSS FRAME CONNECTION ℄ SIZE

CROSS FRAME	CONNECTION ℄ SIZE
C1	1/2"x8 3/8"
C2	1/2"x11 3/8"
C3	1/2"x11 3/8"

INTERIOR GIRDER MOMENT TABLE			
		0.4 Sp. 1 or 0.6 Sp. 2	Pier
I_s	(in^4)	44.189	75.132
$I_c(n)$	(in^4)	87.702	127.083
$I_c(3n)$	(in^4)	66.379	99.341
$I_c(cr)$	(in^4)	-	81.155
S_s	(in^3)	1564	2613
$S_c(n)$	(in^3)	1971.72	8241.44
$S_c(3n)$	(in^3)	1815.62	4411.23
$S_c(cr)$	(in^3)	-	2980.35
DC1	(k/')	1.230	1.360
M_{DC1}	('k)	1736	-4207
DC2	(k/')	0.190	0.190
M_{DC2}	('k)	275	-609
DW	(k/')	0.270	0.270
M_{DW}	('k)	387	-856
M_{LL+IM}	('k)	2193	-2796
M_u (Strength I)	('k)	6933	-12,197
$\phi_f M_n$	('k)	9842	-12,848
f_s DC1	(ksi)	13.32	19.32
f_s DC2	(ksi)	1.81	2.44
f_s DW	(ksi)	2.56	3.46
f_s (LL+IM)	(ksi)	13.35	4.07
f_s (Service II)	(ksi)	35.05	30.51
$0.95R_hF_{yf}$	(ksi)	47.50	47.50
f_s (Total)(Strength I)	(ksi)	46.1	39.5
$\phi_f F_n$	(ksi)	50.0	50.0
V_f	(k)	77.29	60.10

I_s, S_s: Non-composite moment of inertia and section modulus of the steel section used for computing f_s (Total-Strength I, and Service II) due to non-composite dead loads ($in.^4$ and $in.^3$).

$I_c(n)$, $S_c(n)$: Composite moment of inertia and section modulus of the steel and deck based upon the modular ratio, "n", used for computing f_s (Total-Strength I, and Service II) in uncracked sections, due to short-term composite live loads ($in.^4$ and $in.^3$).

$I_c(3n)$, $S_c(3n)$: Composite moment of inertia and section modulus of the steel and deck based upon 3 times the modular ratio, "3n", used for computing f_s (Total-Strength I, and Service II) in uncracked sections, due to long-term composite (superimposed) dead loads ($in.^4$ and $in.^3$).

$I_c(cr)$, $S_c(cr)$: Composite moment of inertia and section modulus of the steel and longitudinal deck reinforcement, used for computing f_s (Total-Strength I and Service II) in cracked sections, due to both short-term composite live loads and long-term composite dead loads ($in.^4$ and $in.^3$).

DC1: Un-factored non-composite dead load (kips/ft.).

M_{DC1}: Un-factored moment due to non-composite dead load (kip-ft.).

DC2: Un-factored long-term composite (superimposed excluding future wearing surface) dead load (kips/ft.).

M_{DC2}: Un-factored moment due to long-term composite (superimposed excluding future wearing surface) dead load (kip-ft.).

DW: Un-factored long-term composite (superimposed future wearing surface only) dead load (kips/ft.).

M_{DW}: Un-factored moment due to long-term composite (superimposed future wearing surface only) dead load (kip-ft.).

M_{LL+IM}: Un-factored live load moment plus dynamic load allowance (impact) ((kip-ft.).

M_u (Strength I): Factored design moment (kip-ft.).
$1.25\ (M_{DC1} + M_{DC2}) + 1.5\ M_{DW} + 1.75\ M_{LL+IM}$

$\phi_f M_n$: Compact composite positive moment capacity computed according to Article 6.10.7.1 (kip-ft.).

f_s DC1: Un-factored stress at edge of flange for controlling steel flange due to vertical non-composite dead loads as calculated below (ksi).
M_{DC1} / S_{nc}

f_s DC2: Un-factored stress at edge of flange for controlling steel flange due to vertical composite dead loads as calculated below (ksi).
M_{DC2} / $S_c(3n)$ or M_{DC2} / $S_c(cr)$ as applicable.

f_s DW: Un-factored stress at edge of flange for controlling steel flange due to vertical composite future wearing surface loads as calculated below (ksi).
M_{DW} / $S_c(3n)$ or M_{DW} / $S_c(cr)$ as applicable.

f_s (LL+IM): Un-factored stress at edge of flange for controlling steel flange due to vertical composite live plus impact loads as calculated below (ksi).
M_{LL+IM} / $S_c(3n)$ or M_{LL+IM} / $S_c(cr)$ as applicable.

f_s (Service II): Sum of stresses as computed below (ksi).
$f_{sDC1} + f_{sDC2} + f_{sDW} + 1.3\ f_s(LL+IM)$

$0.95R_hF_{yf}$: Composite stress capacity for Service II loading according to Article 6.10.4.2 (ksi).

f_s (Total)(Strength I): Sum of stresses as computed below on non-compact section (ksi).
$1.25\ (f_{sDC1} + f_{sDC2}) + 1.5\ f_{sDW} + 1.75\ f_{sLL+IM}$

$\phi_f F_n$: Non-Compact composite positive or negative stress capacity for Strength I loading according to Article 6.10.7.2 (ksi).

V_f: Maximum factored shear range in composite portion of span computed according to Article 6.10.10.

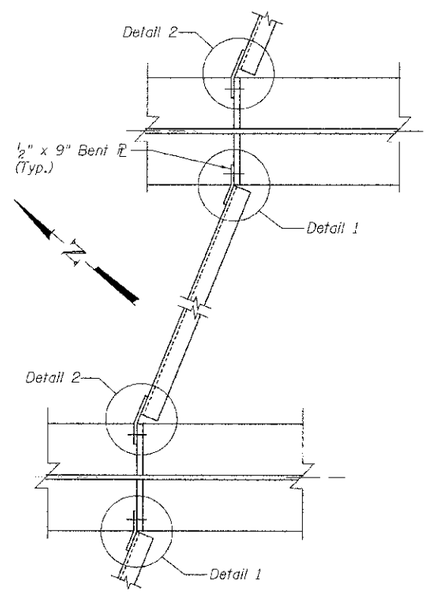

TYPICAL CROSS FRAME PLAN AT PIER

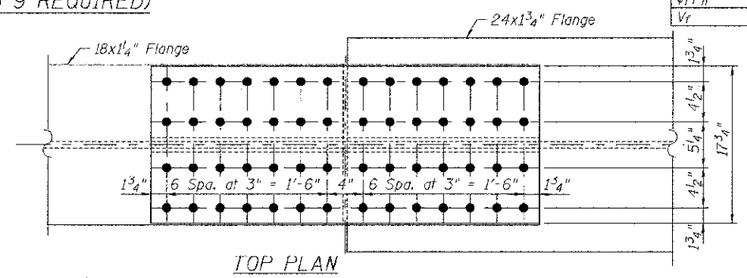

TOP PLAN

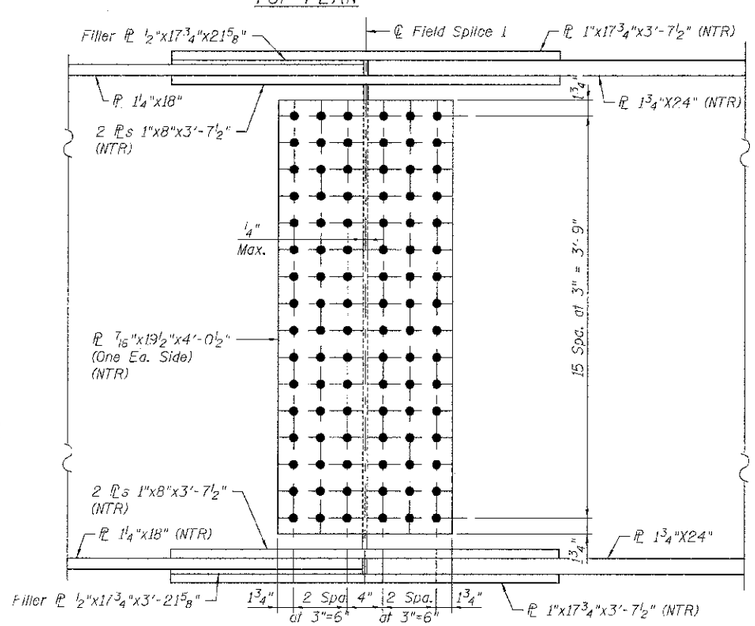

FIELD SPLICE ELEVATION DETAIL
Field splice 1 Shown - Field splice 2 similar but mirrored

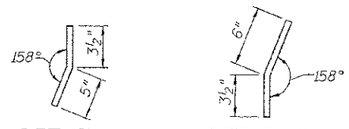

DETAIL 1
BENT PLATE

DETAIL 2
BENT PLATE

TOP OF WEB ELEVATIONS
(For Fabrication use only)

LOCATION	GIRDER 1	GIRDER 2	GIRDER 3	GIRDER 4	GIRDER 5	GIRDER 6	GIRDER 7	GIRDER 8	GIRDER 9	GIRDER 10
C.L. OF BEARING W. ABUT.	640.55	640.70	640.85	641.00	641.13	640.94	640.76	640.57	640.38	640.19
C.L. OF SPLICE # 1	640.64	640.82	641.00	641.17	641.34	641.18	641.02	640.86	640.70	640.54
C.L. OF BEARING PIER	640.28	640.47	640.66	640.85	641.03	640.88	640.73	640.59	640.44	640.29
C.L. OF SPLICE # 2	639.94	640.14	640.34	640.55	640.74	640.61	640.47	640.34	640.21	640.07
C.L. OF BEARING E. ABUT.	638.71	638.92	639.12	639.33	639.52	639.39	639.26	639.13	639.00	638.87

URS
100 S. WACKER DR.
SUITE 500
CHICAGO IL 60606
TEL (312)-939-1000
FAX (312)-939-4198

USER NAME = 65786	DESIGNED - STB	REVISED -	
	CHECKED - NPP	REVISED -	
PLOT SCALE = 1:1 ' / IN.	DRAWN - SOI	REVISED -	
PLOT DATE = 10/16/2012	CHECKED - NPP	REVISED -	

STATE OF ILLINOIS
DEPARTMENT OF TRANSPORTATION

SUPERSTRUCTURE STEEL DETAILS
STRUCTURE NO. 099-3035

SHEET NO. 19 OF 38 SHEETS

F.A.U. RTE.	SECTION	COUNTY	TOTAL SHEETS	SHEET NO.
1644	01-00181-00-FP	WILL	328	177

CONTRACT NO. 63647
ILLINOIS FED. AID PROJECT

FILE NAME = q:\wadsh_25367381_95th\d-wrangh\contract-mx\X\Structures\Bridge\Bridge\Contract Copy\G-19 Superstructure Steel Details 1.dgn