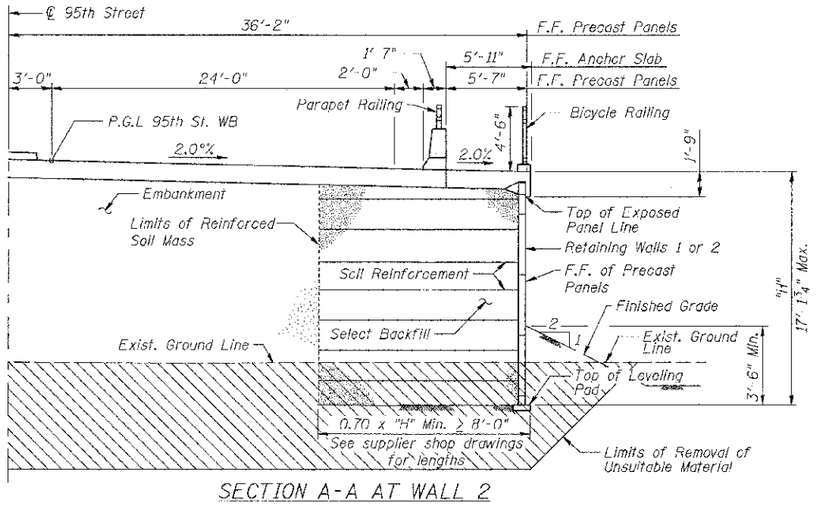

SECTION A-A AT WALL 2

(Looking West)

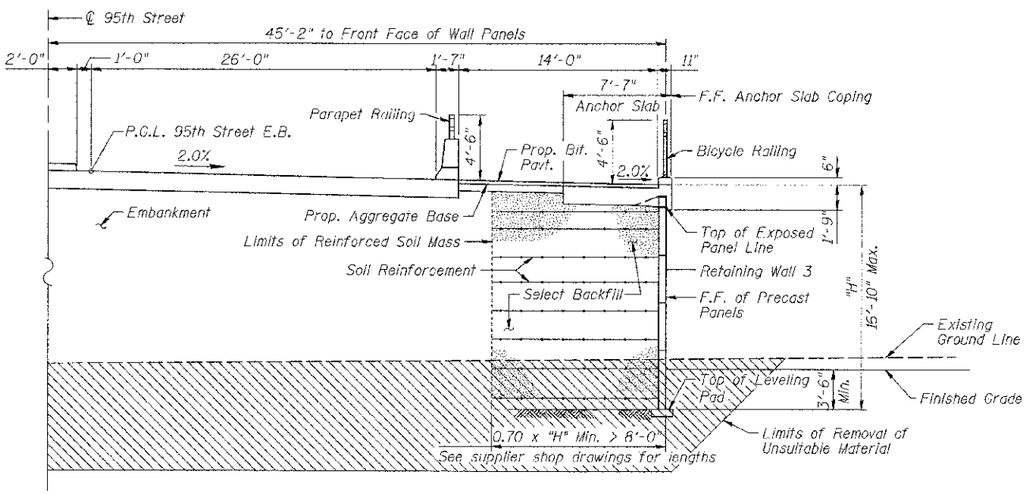

SECTION B-B AT WALL 3

(Looking East)

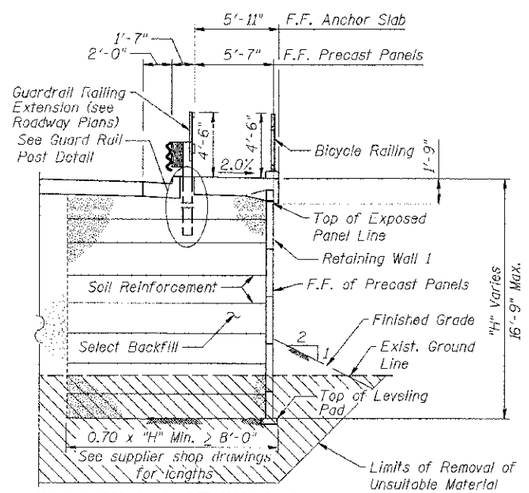

SECTION C-C AT WALL 1

(Looking West)

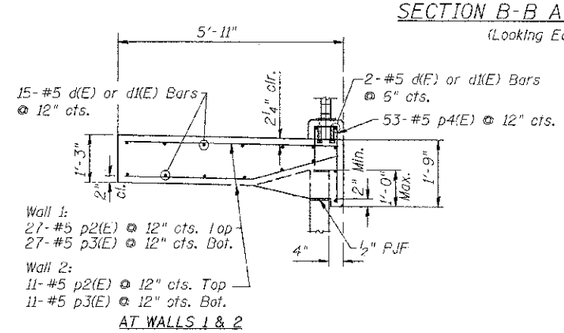

AT WALLS 1 & 2

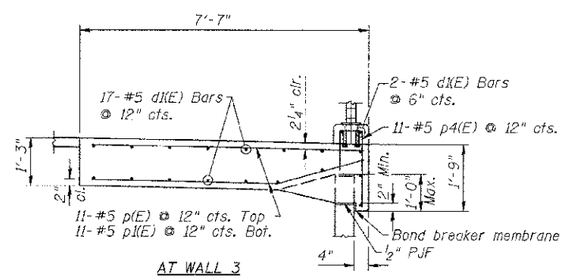

AT WALL 3

ANCHOR SLAB DETAIL

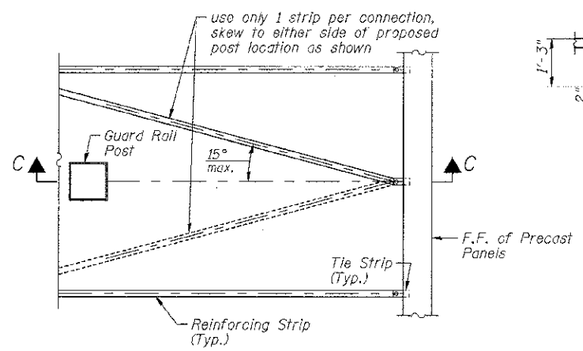

GUARD RAIL POST DETAIL

Guard Rail Post Note:

Prior to placing top row of reinforcing strips, the Contractor must locate all proposed guard rail post and mark them on back face of wall. Place interfering reinforcing strips as shown to provide room for future post installation.

LEGEND

Indicates removal and replacement of unsuitable material and (See roadway plans)

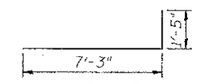

BAR p(E)

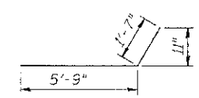

BAR p1(E)

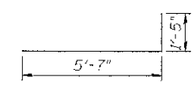

BAR p2(E)

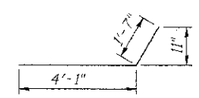

BAR p3(E)

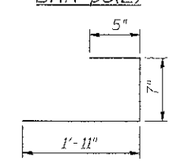

BAR p4(E)

BILL OF MATERIAL

Bar	Size	No.	Length	Shape
d(E)	#5	17	25'-8"	
d1(E)	#5	35	10'-0"	
p(E)	#5	11	8'-8"	
p1(E)	#5	11	7'-4"	
p2(E)	#5	38	7'-0"	
p3(E)	#5	38	5'-8"	
p4(E)	#5	64	2'-11"	
Concrete Superstructure			Cu. Yd.	14.3
Reinforcement Bars, Epoxy Coated			Pound	1,710
Mechanically Stabilized Earth Retaining Wall			Sq. Ft.	499

The MSE wall supplier's internal stability design shall account for the anchor slab's bearing pressure surcharge of 1.0 ksf and horizontal sliding force of 0.5 kips/ft. of wall

Note:

For locations of Sections A-A, B-B and C-C See Sheet MSE Retaining Walls 1, 2 & 3 at Abutment - 1