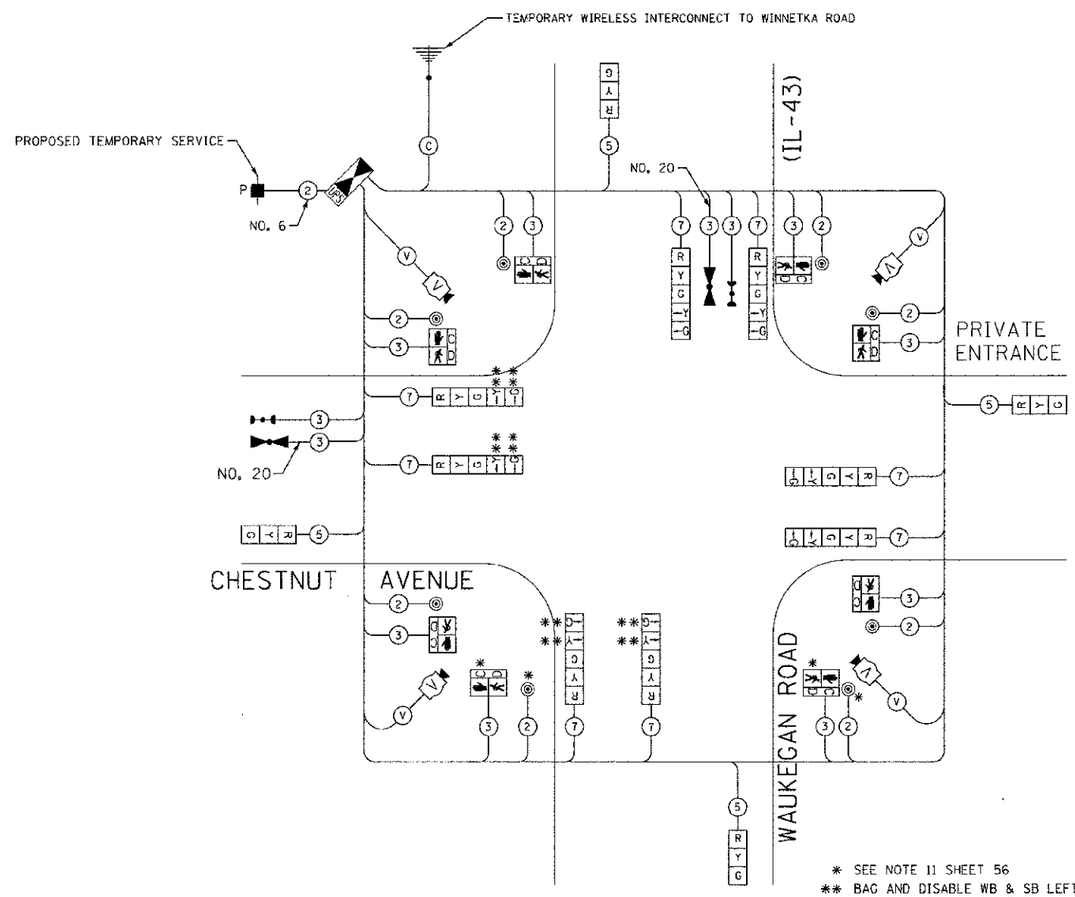

* SEE NOTE 11 SHEET 56
** BAG AND DISABLE WB & SB LEFT TURN ARROWS UNTIL WB & SB LEFT TURNS LANES ARE OPENED.

TEMPORARY CABLE PLAN
(NOT TO SCALE)

CONTROLLER SEQUENCE

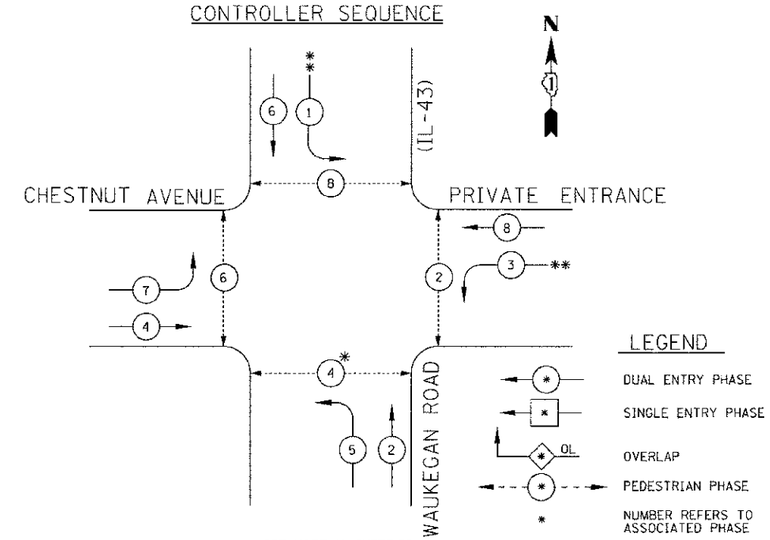

* SEE NOTE 11 SHEET 56
** BAG AND DISABLE WB & SB LEFT TURN ARROWS UNTIL WB & SB LEFT TURNS LANES ARE OPENED.

TEMPORARY PHASE DESIGNATION DIAGRAM

TEMPORARY EMERGENCY VEHICLE PREEMPTION SEQUENCE

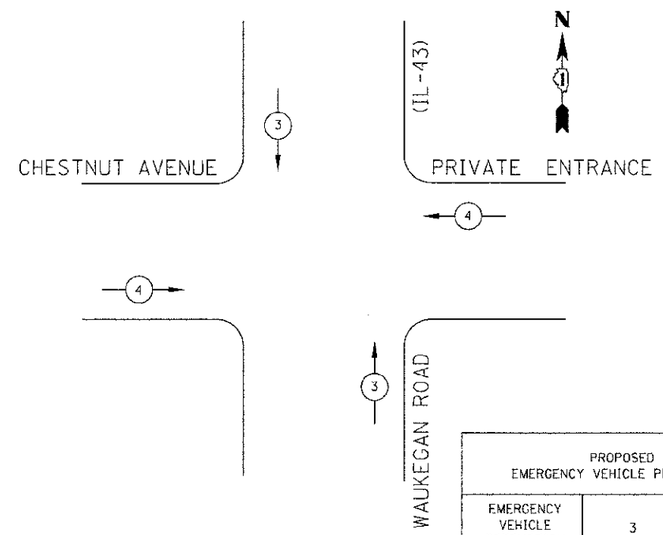

I.D.O.T TRAFFIC SIGNAL INSTALLATION ELECTRICAL SERVICE REQUIREMENTS					TOTAL WATTAGE
TYPE	NO. LAMPS	WATTAGE INCAND.	WATTAGE LED	%OPERATION	
SIGNAL (RED)	12		17	0.50	102.00
(YELLOW)	12		25	0.25	75.00
(GREEN)	12		15	0.25	45.00
ARROW	16		12	0.10	19.20
PED. SIGNAL	8		25	1.00	200.00
CONTROLLER	1	100		1.00	100.00
ILLUM. SIGN	-	---	--	0.05	---
VIDEO DET	1	150		1.00	150.00
FLASHER				0.50	-
ENERGY COSTS TO:				TOTAL =	691.20

ILLINOIS DEPARTMENT OF TRANSPORTATION
201 WEST CENTER COURT
SCHAUMBURG, ILLINOIS 60196-1096
ENERGY SUPPLY CONTACT: MAUREEN RAYE
PHONE: 847-816-5492
COMPANY: COM. ED.

NOTE:

THE TRAFFIC SIGNAL CONTROLLER EQUIPMENT FOR THIS PROJECT SHALL BE "ECONOLITE" TO MATCH THE EXISTING ADJACENT SYSTEM.

PROPOSED EMERGENCY VEHICLE PREEMPTION		
EMERGENCY VEHICLE PREEMPTION	3	4
MOVEMENT	↓↑	⇄

COPYRIGHT © 2012 BY BAXTER & WOODMAN, INC.
CONSULTING ENGINEERS, 7744 W. IMPERIAL HIGHWAY, P.O. BOX 7728, 90293-7728, PH. (310) 670-9130
LICENSE NO. 184-001011 EXPIRES 12/31/2013
2:25:24 PM 10/17/2012

BAXTER & WOODMAN Consulting Engineers

DESIGNED - DSH	REVISED - 9/28/12 PER IDOT	STATE OF ILLINOIS DEPARTMENT OF TRANSPORTATION	TEMPORARY CABLE PLAN AND TEMPORARY PHASE DESIGNATION DIAGRAM WAUKEGAN ROAD (IL-43) AND CHESTNUT AVENUE
DRAWN - MAC	REVISED -		
CHECKED - TLH	REVISED -		
DATE - 8/23/12	FILE - 1:0025-12-TS_TEMP_CABLE.sht		SCALE: NONE STA. TO STA.

F.A.P./F.A.U. RTE.	SECTION	COUNTY	TOTAL SHEETS	SHEET NO.
0348/1352	05-00160-00-CH	COOK	109	58
C-91-070-06		CONTRACT NO. 63756		
FED. ROAD DIST. NO. 1 ILLINOIS		FED. AID PROJECT F-0348(35)		