BM - Chiseled "□" on Northeast Wingwall of SN 011-0037 Sta. 470+76.0, 17.0' Lt., Elev. 647.33
Two-way traffic shall be maintained on S.N. 011-0037 while S.N. 011-0038 is being constructed.
Existing Structure - None

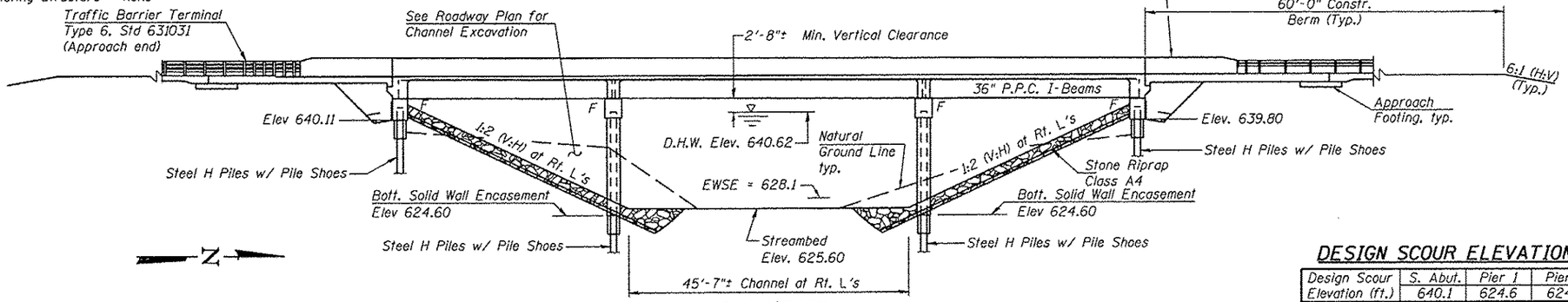

ELEVATION

DESIGN SCOUR ELEVATION TABLE

Design Scour Elevation (ft.)	S. Abut.	Pier 1	Pier 2	N. Abut.
	640.1	624.6	624.6	639.8

Note:
Up to 1/4" will be ground off the bridge deck and the bridge approach slab.

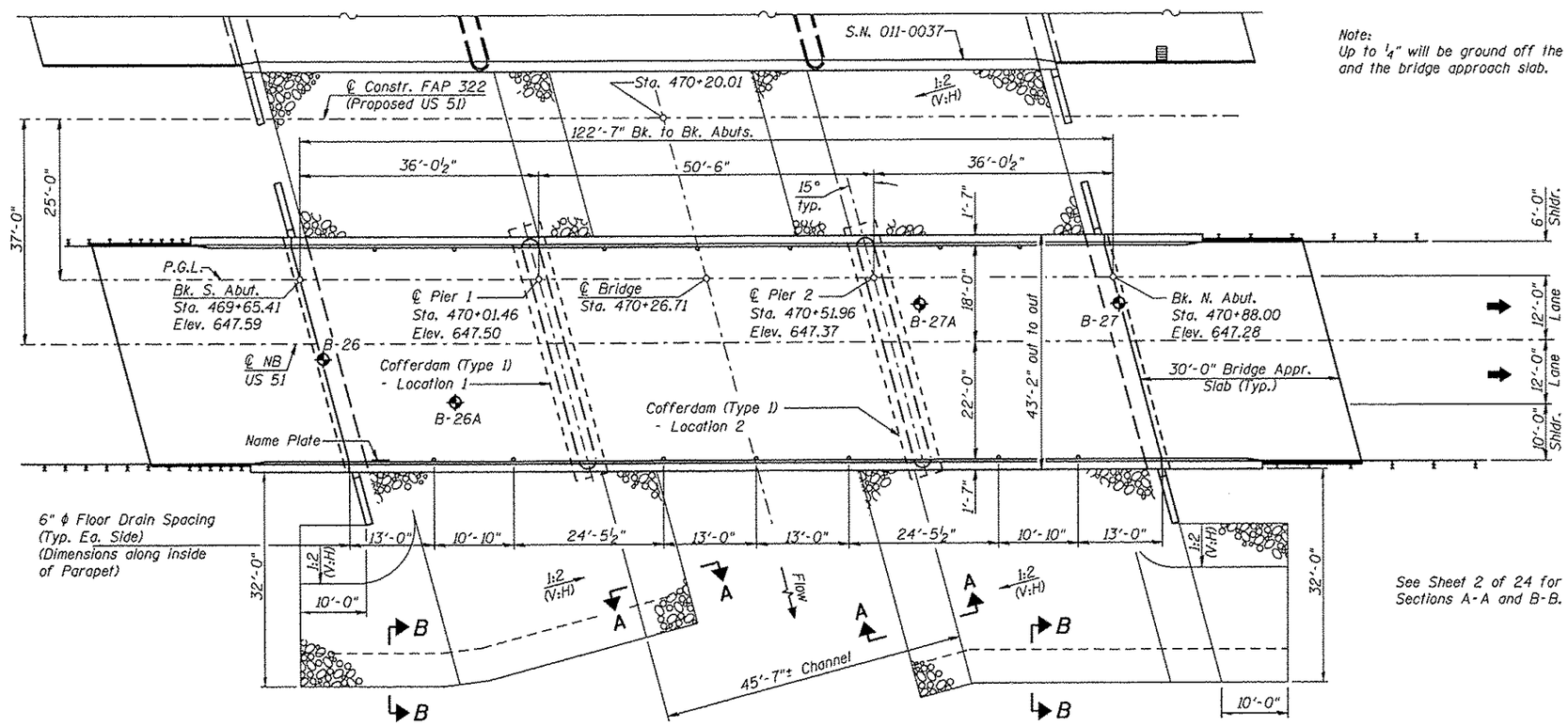

See Sheet 2 of 24 for Sections A-A and B-B.

PLAN

INDEX OF SHEETS

1. General Plan and Elevation
2. General Data
3.-4. Top of Slab Elevations
5.-6. Top of Approach Slab Elevations
7. Superstructure
8. Superstructure Details
8A. Concrete Parapet Slipforming Option
9. Concrete Diaphragm Details
10.-11. Bridge Approach Slab Details
12. Framing Plan
13. PPC-I Beam Details Spans 1 and 3
14. PPC-I Beam Details Span 2
15. 36" PPC-I Beam Details
16. South Abutment
17. North Abutment
18. Pier 1 Details
19. Pier 2 Details
20. HP Pile Details
21. Bar Splicer Assembly Details
22.-24. Boring Logs

DESIGN STRESSES

FIELD UNITS

f'_c = 3,500 psi
f_y = 60,000 psi (Reinf.)

PRECAST PRESTRESSED UNITS

f'_c = 6,000 psi
f'_{ci} = 5,000 psi
f'_s = 270,000 psi (½" ϕ Low Relaxation Strands)
f_{si} = 201,960 psi (½" ϕ Low Relaxation Strands)

DESIGN SPECIFICATIONS

2002 AASHTO "Standard Specifications for Highway Bridges", 17th Edition

LOADING HS20-44

Allow 50#/sq. ft. for future wearing surface.

SEISMIC DATA

Seismic Performance Category (SPC)= A
Bedrock Acceleration Coefficient (A)= 0.057g
Site Coefficient (S)= 1.0

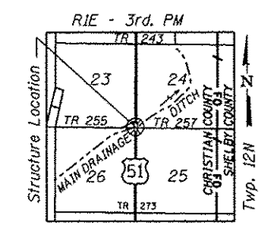

LOCATION SKETCH

WATERWAY INFORMATION

Existing Low Grade = 645.46 at Sta. 349+39 (old)/477+11.5 (new)
Drainage Area = 28.2 sq. mi. Proposed Low Grade = 646.84 at Sta. 473+29.89

Flood	Freq. Yr.	Q C.F.S.	Opening Sq. Ft. Exist.	Opening Sq. Ft. Prop.	Nat. H.W.E.	Head-Ft. Exist.	Head-Ft. Prop.	Headwater El. Exist.	Headwater El. Prop.
	10	2270	981	973	639.90	0.12	0.04	640.02	639.94
Design	50	3580	1061	1064	640.62	0.20	0.23	640.82	640.85
Base	100	4150	1100	1105	640.96	0.25	0.30	641.21	641.26
Overtopping	-	-	-	-	-	-	-	-	-
Max. Calc.	500	5530	1187	1202	641.69	0.35	0.49	642.04	642.18

10 Yr. Velocity thru Exist. Bridge = 3.20 ft/s 10 Yr. Velocity thru Prop. Bridge = 3.27 ft/s

LICENSED STRUCTURAL ENGINEER MICHAEL T. HALEY 81-5991 CHATHAM STATE OF ILLINOIS

Michael T. Haley 11-21-12
Date

Michael T. Haley
Licensed Structural Engineer
State of Illinois No. 81-5991
Expires 11/30/2012

APPROVED
For Structural Adequacy Only
Engineer of Bridges & Structures

GENERAL PLAN AND ELEVATION
US RTE 51 OVER MAIN DRAINAGE DITCH
FAP RTE 322-SECTION 11-13
CHRISTIAN COUNTY
STATION 470+20.01
S.N. 011-0038

LIN ENGINEERING, LTD. Consulting Engineers Chatham, Illinois	USER NAME =	DESIGNED - KWB	REVISED -
	FILE NAME =	CHECKED - MTH	REVISED -
	PLOT SCALE =	DRAWN - JMD	REVISED -
	PLOT DATE =	CHECKED - MTH	REVISED -

STATE OF ILLINOIS
DEPARTMENT OF TRANSPORTATION

GENERAL PLAN AND ELEVATION
STRUCTURE NO. 011-0038
SHEET NO. 1 OF 24 SHEETS

F.A.P. RTE.	SECTION	COUNTY	TOTAL SHEETS	SHEET NO.
322	11-13	CHRISTIAN	437	177
		CONTRACT NO. 72961		
		ILLINOIS FED. AID PROJECT		