72961

F.A.P. RTE.	SECTION	COUNTY	TOTAL SHEETS	SHEET NO.
322	11-13	CHRISTIAN	437	261a
STA.		TO STA.		
FED. ROAD DIST. NO.	ILLINOIS	FED. AID PROJECT		

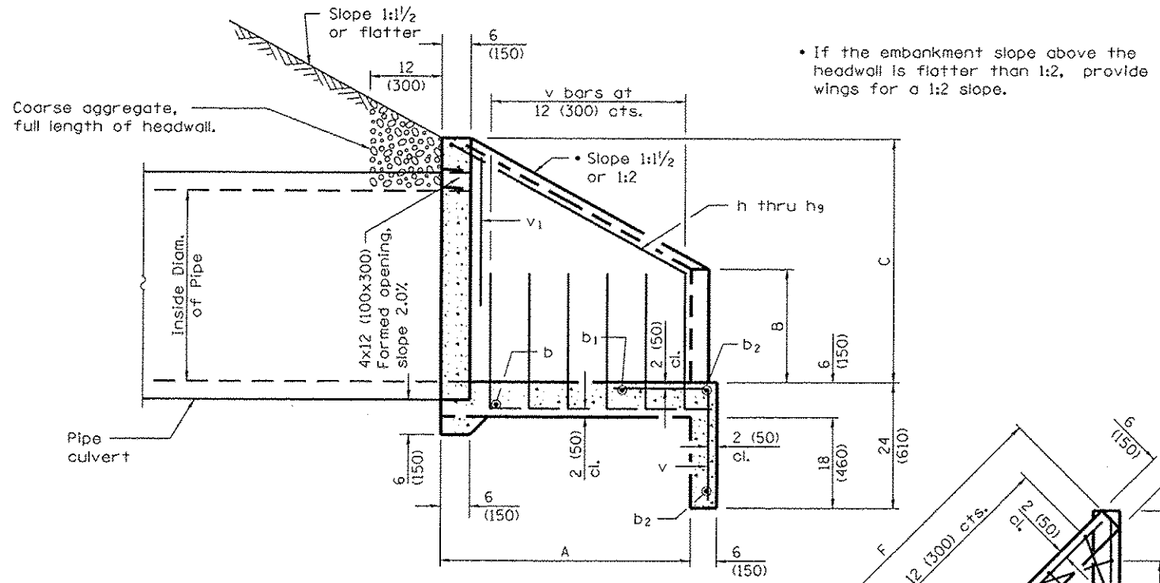

• If the embankment slope above the headwall is flatter than 1:2, provide wings for a 1:2 slope.

SECTION A-A

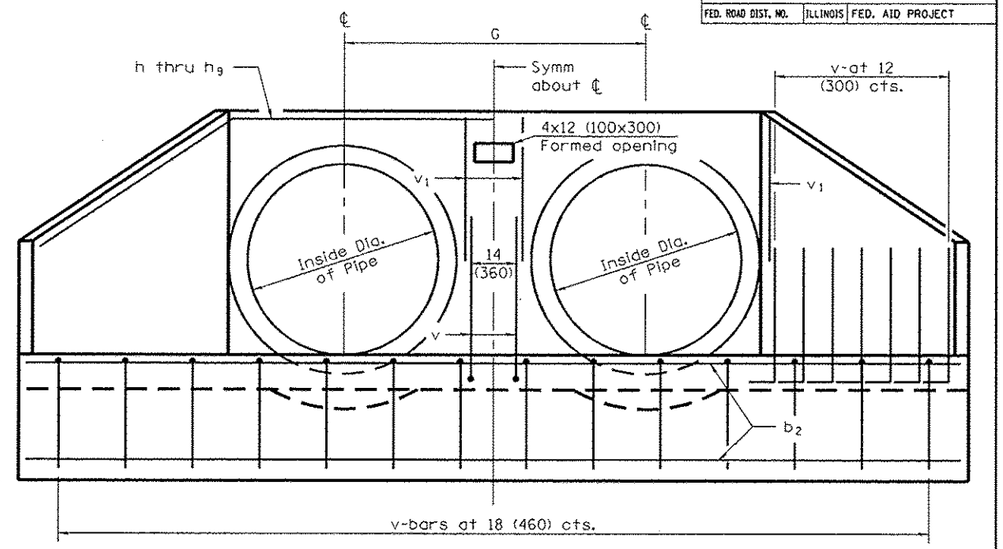

END ELEVATION

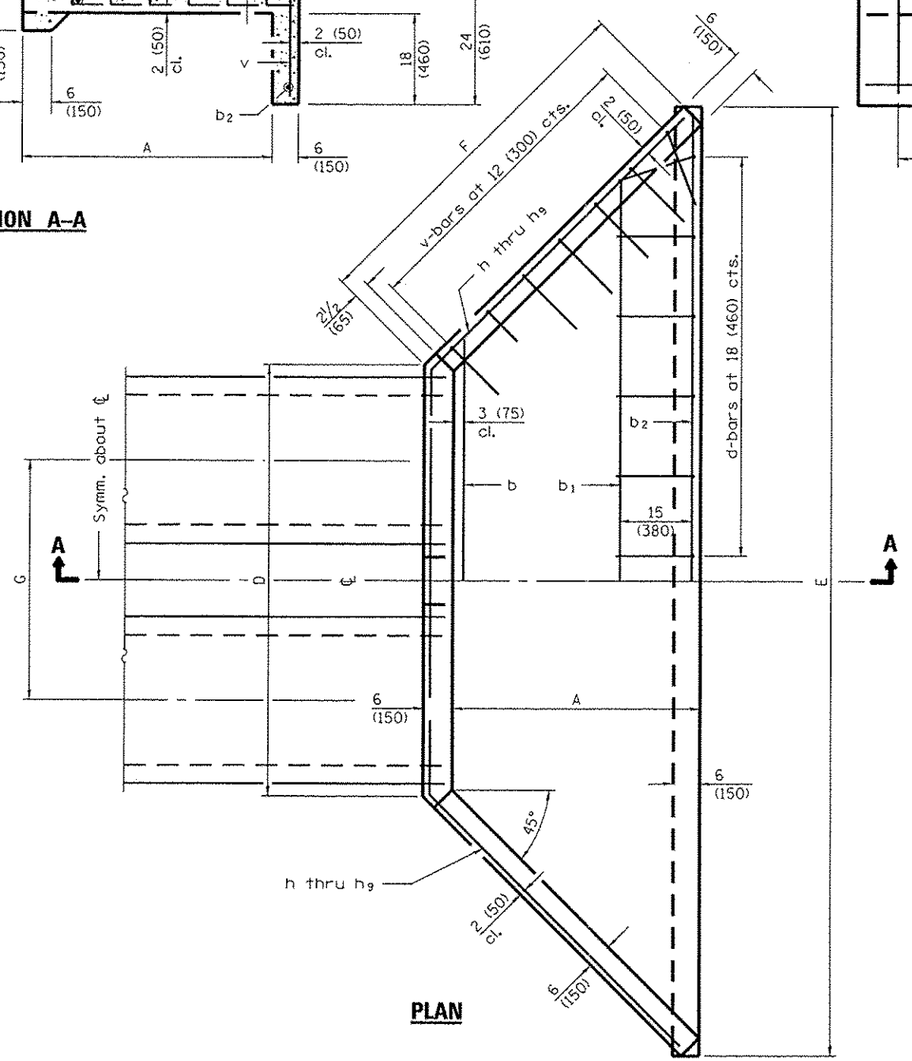

PLAN

STATE OF ILLINOIS
ALAN D. LUKENS
081-005167
QUINCY, ILLINOIS
LICENSED STRUCTURAL ENGINEER

10/4/12

Alan D. Lukens
Licensed Structural Engineer
State of Illinois No. 081-005167
License Expires 11/30/2012

Date

GENERAL NOTES

All slope ratios are expressed as units of vertical displacement to units of horizontal displacement (V:H).

All dimensions are in inches (millimeters) unless otherwise shown.

REVISIONS	
NAME	DATE

ILLINOIS DEPARTMENT OF TRANSPORTATION
CAST-IN-PLACE END SECTIONS
MULTIPLE PIPE CULVERTS 15"-36"
FAP 322 (US 51)
SECTION 11-13
CHRISTIAN COUNTY

SCALE: DRAWN BY SEB
DATE 10/2/12 CHECKED BY ADL

SHEET 1 OF 2

12/3/2012

D:\81Lin\181B329\SOUTH PLANS NEW\CADD Sheets\0872961-ah-CIP end section01.dgn