STATE OF ILLINOIS
DEPARTMENT OF TRANSPORTATION

ROUTE NO.	SECTION	COUNTY	TOTAL SHEETS	SHEET NO.
		Cook	12	7
FED. ROAD DIST. NO. 7		ILLINOIS	FED. AID PROJECT-	

SHEET NO. 4
4 SHEETS

Contract Number: 60A82

MIN. BAR LAPS

#5 Bar = 2'-2"

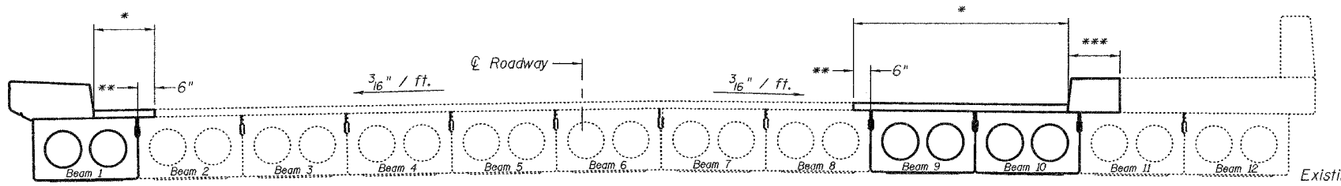

DECK CROSS SECTION SPAN 4

(Looking North)

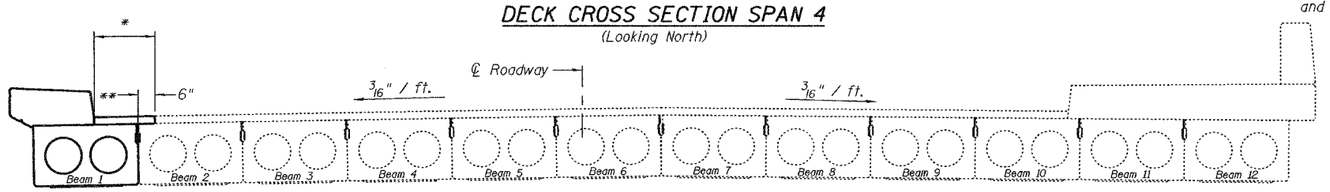

DECK CROSS SECTION SPANS 5 AND 7

(Looking North)

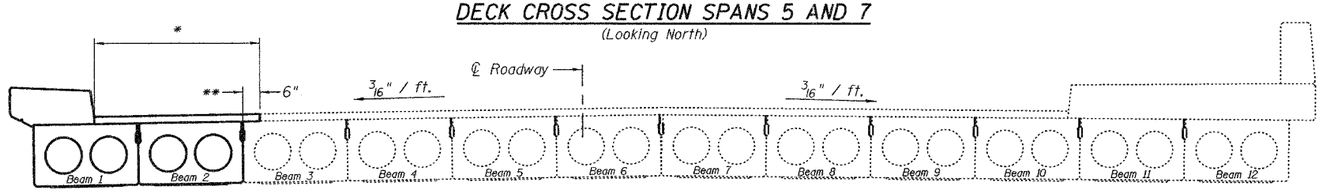

DECK CROSS SECTION SPAN 6

(Looking North)

*New waterproofing membrane and bituminous wearing surface.

**Limits of bituminous concrete removal.

***Limits of concrete sidewalk removal. Cost of removal of existing median over Beam 1 is included with Removal of Existing Deck Beams.

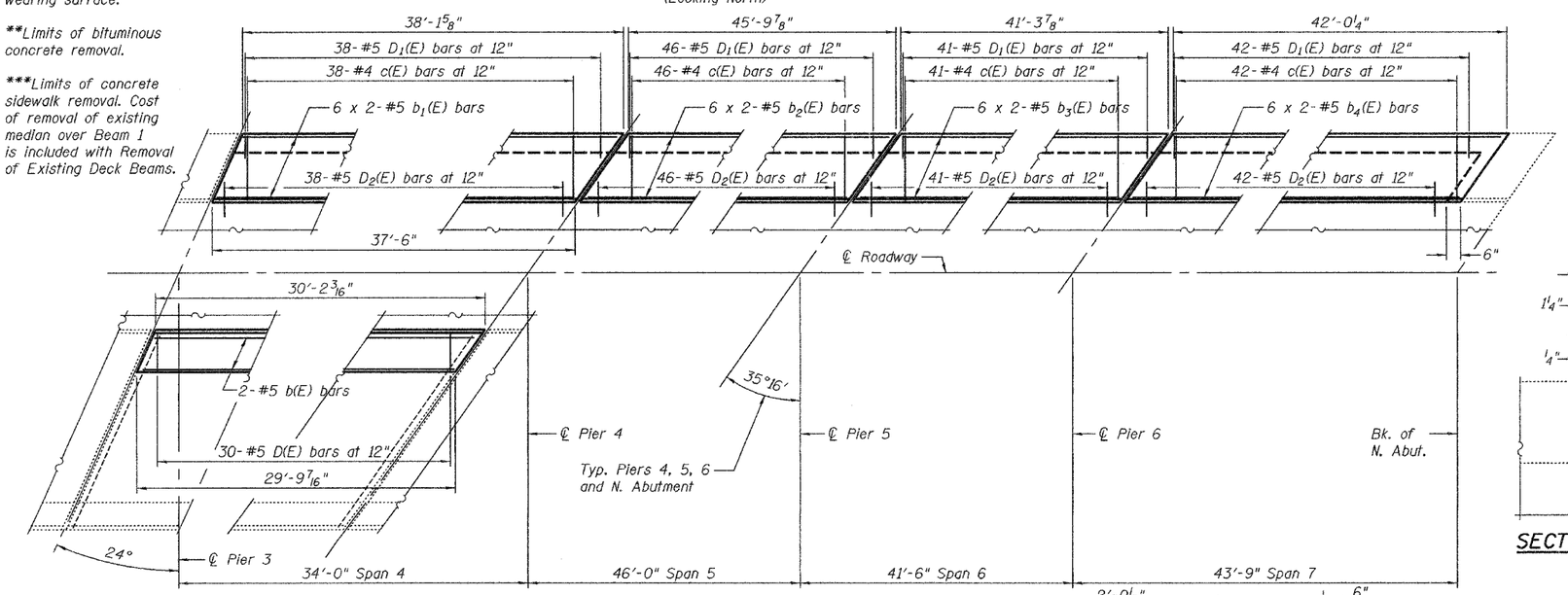

PARTIAL DECK PLAN

(Showing median and sidewalk removal and replacement)

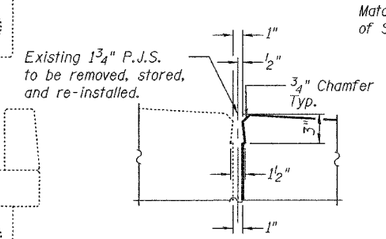

DETAIL A

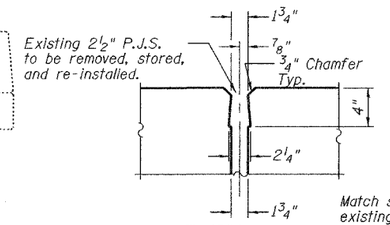

SECTION A-A

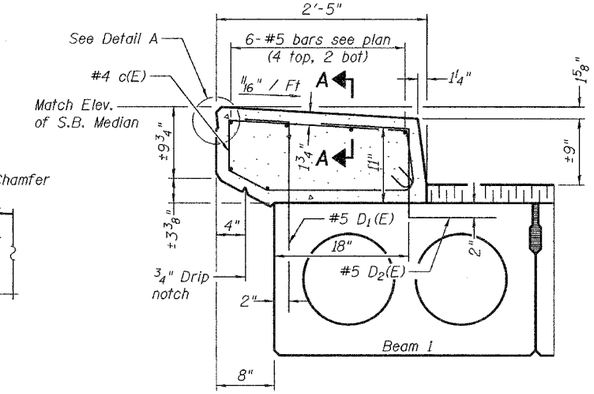

TYPICAL MEDIAN SECTION

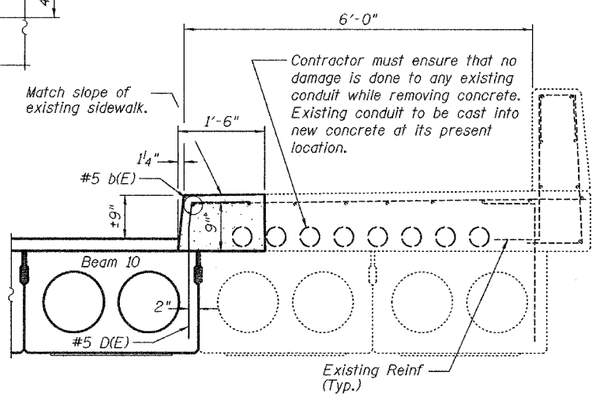

TYPICAL SIDEWALK SECTION

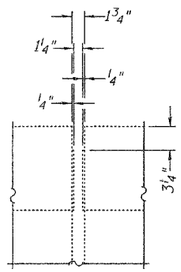

SECTION B-B

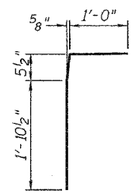

Bar D(E)

BILL OF MATERIAL

Bar	No.	Size	Length	Shape
b(E)	2	#5	30'-0"	
b_1(E)	12	#5	20'-0"	
b_2(E)	12	#5	24'-0"	
b_3(E)	12	#5	21'-9"	
b_4(E)	12	#5	22'-2"	
c(E)	167	#4	6'-3"	
Concrete Removal			Cu. Yd.	1.8
Concrete Superstructure			Cu. Yd.	16.6
Reinforcement Bars, Epoxy Coated			Lbs.	1,860

Reinforcement bars designated (E) shall be epoxy coated.

Bars indicated thus 1 x 2-#5 etc. indicates 1 line of bars with 2 lengths per line.

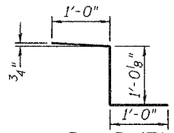

Bar D_2(E)

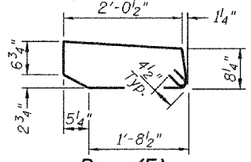

Bar c(E)

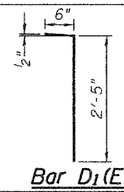

Bar D_1(E)

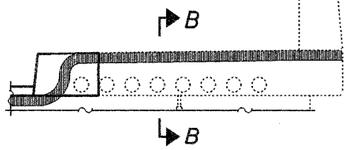

TYPICAL END OF SEALER AT SIDEWALK

DECK DETAILS
NORTH BOUND LANES
PULASKI ROAD / BRC R.R.
COOK COUNTY
SN 016-1020

DESIGNED	V.H.V.
CHECKED	S.J.B.
DRAWN	Drew Christopher
CHECKED	V.H.V. S.J.B.

November 16, 2005

EXAMINED John A. Morris
ENGINEER OF STRUCTURAL SERVICES

PASSED Ralph E. Anderson
ENGINEER OF BRIDGES AND STRUCTURES

...\version 8 archive\0161020.dgn 11/28/2005 1:16:06 PM