F.A.I. RTE.	SECTION	COUNTY	TOTAL SHEETS	SHEET NO.
	*	COOK	631	339F
STA.		TO STA.		
FED. ROAD DIST. NO.		ILLINOIS	FED. AID PROJECT	

* (2425 & 2626) R-2 CONTRACT NO. 62111

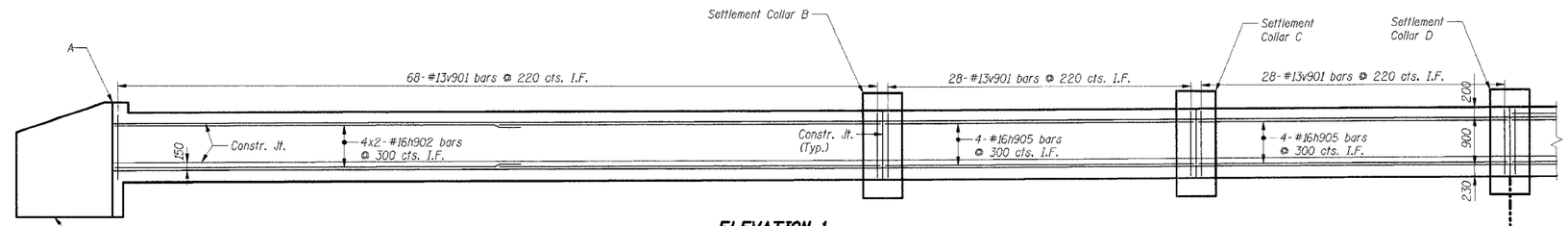

ELEVATION-1
(Looking East along ℄ Culvert)

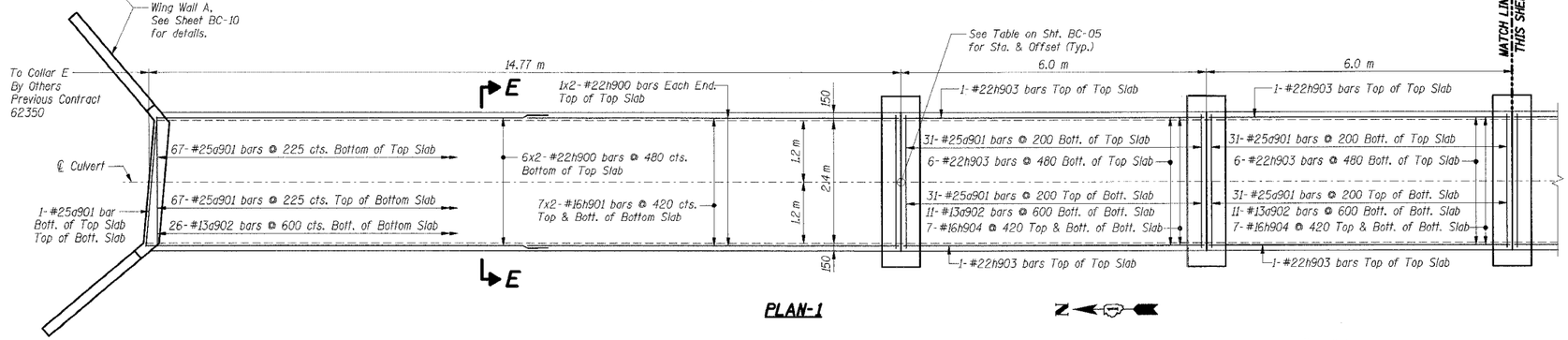

PLAN-1

BILL OF MATERIAL

Bar	No.	Size	Length (m)	Shape
a901	514	#25	3.16	
a902	92	#13	2.48	
h900	16	#22	7.84	
h901	28	#16	7.66	
h902	16	#16	7.66	
h903	24	#22	5.90	
h904	42	#16	5.90	
h905	24	#16	5.90	
h906	24	#22	6.97	
h907	42	#16	6.73	
h908	24	#16	6.73	
v901	480	#13	1.23	

Item	Unit	Total
Reinforcement Bars	kg	9,880
Concrete Box Culverts	Cu m	76.8

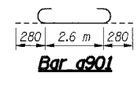

Bar a901

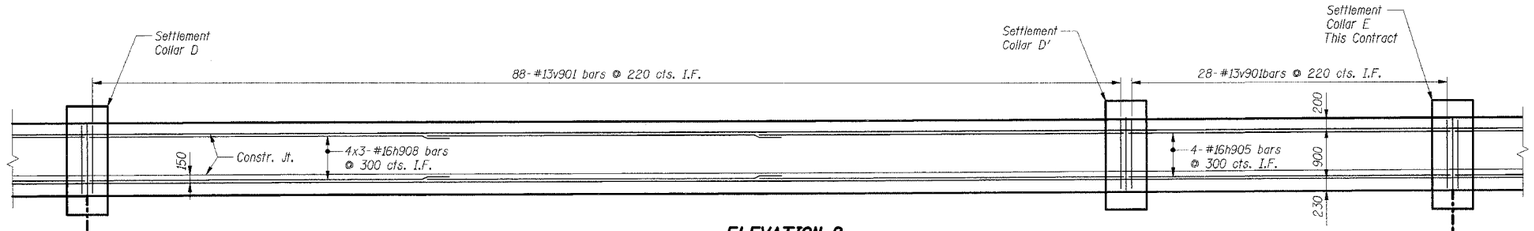

ELEVATION-2
(Looking East along ℄ Culvert)

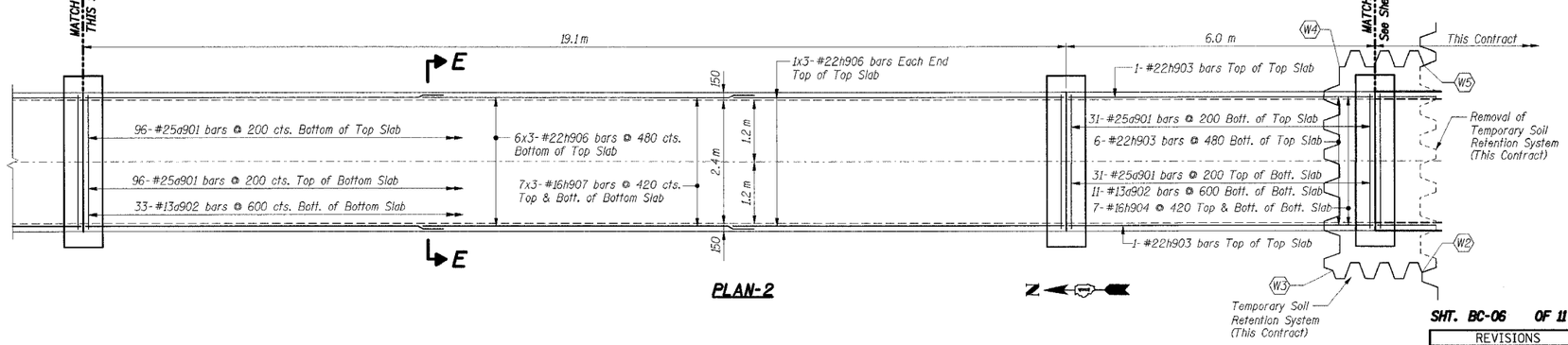

PLAN-2

Notes:

1. All dimensions are in millimeters (mm) except as noted.
2. Bars indicated thus 4 x 2-#15 etc. indicates 4 lines of bars with 2 lengths per line.
3. For Sections E-E, see Sht. BC-09.
4. For Settlement Collar Details see Sheet BC-09.
5. Work this sheet with Shts. BC-07 and BC-08.
6. I.F. denotes Inside Face. O.F. denotes Outside Face.

THIS SHEET FOR INFORMATION ONLY

SHT. BC-06 OF 11

REVISIONS	
NAME	DATE

ILLINOIS DEPARTMENT OF TRANSPORTATION
F.A.I. ROUTE 80/94 (KINGERY EXPRESSWAY)
EB & WB INSIDE LANES (MAINLINE) CONSTRUCTION
BOX CULVERT
STRUCTURE NO. 016-C013 STA. 5+566.000
SECTIONS 2001-167R AND (2425 & 2626) R-1
COOK COUNTY

TOP & BOTTOM SLAB PLANS & WALL ELEVATIONS I

DATE: 1/4/06 DRAWN BY: QD CHECKED BY: MJK

TENG & ASSOCIATES, INC.
ENGINEERS/ARCHITECTS/PLANNERS
CHICAGO, ILLINOIS

1 Added Sheet 01/04/2006

..\AB99B01A.DGN,..\BC99R01A.DGN,..\FR50R01A.DGN,..\BC99R02A.DGN,..\BC99R01A.DGN,..\BC99R02A.DGN
12-30-2005, 10:01:17 T:\DOCUMENT\193750\STRUCT\DGN\BC17032A.DGN VARSINKZ
1 2 3 4 5 6 7 8 9 10 11 12 13 14 15 16 17 18 19 20 21 22 23 24 25 26 27 28 29 30 31 32 33 34 35 36 37 38 39 40 41 42 43 44 45 46 47 48 49 50 51 52 53 54 55 56 57 58 59 60 61 62 63