F.A.I. RTE.	SECTION	COUNTY	TOTAL SHEETS	SHEET NO.
83	*	COOK	631	527
STA.		TO STA.		
FED. ROAD DIST. NO.		ILLINOIS	FED. AID PROJECT	
* (2425 & 2626) R-2			CONTRACT NO. 62111	

LEGEND

- EXISTING PAVEMENT
- TEMPORARY PAVEMENT
- POROUS GRANULAR EMBANKMENT

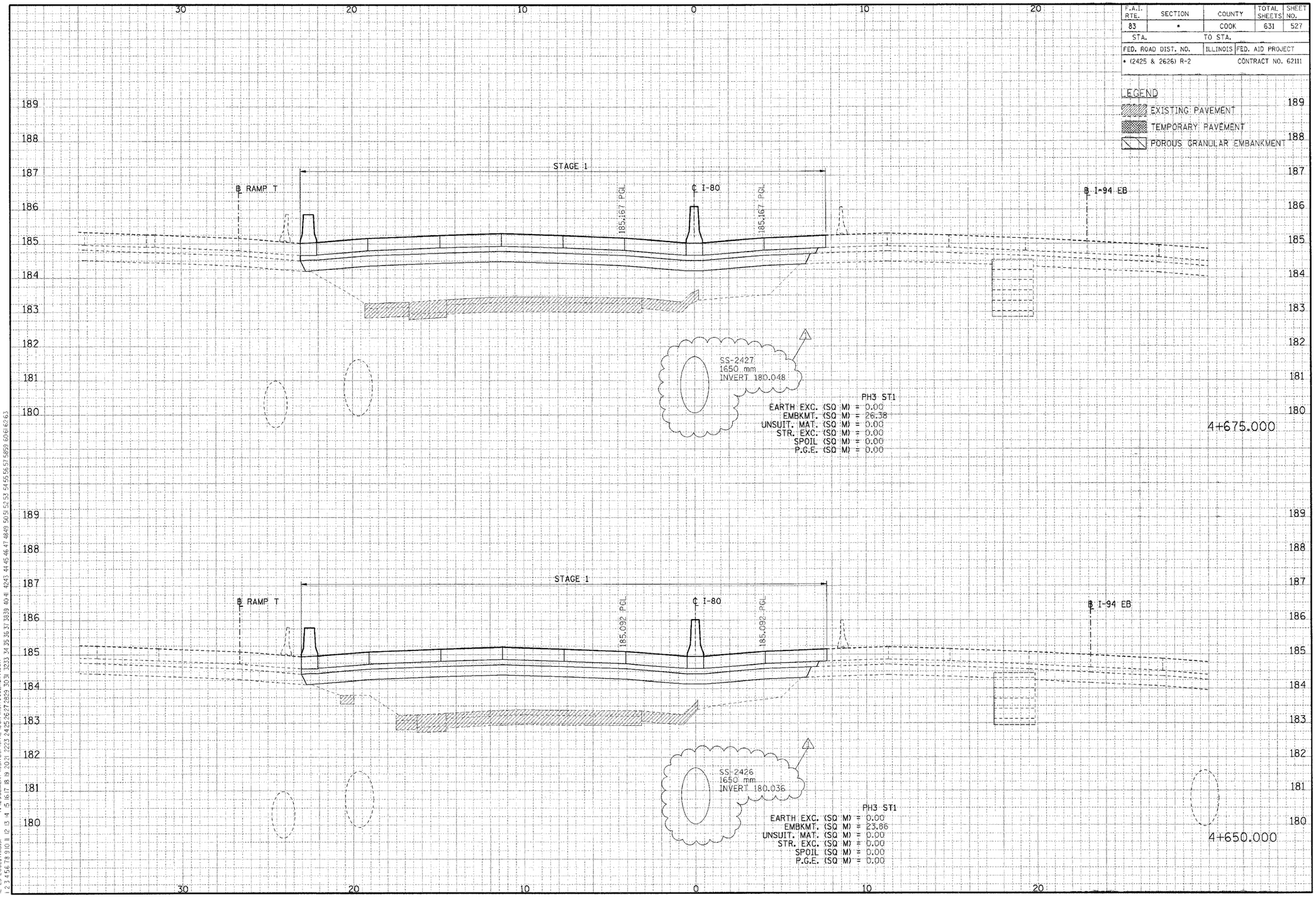

CROSS-SECTIONS FOR I-80/94 △1 REVISED 01/04/2006, KV