F.A.I. RTE.	SECTION	COUNTY	TOTAL SHEETS	SHEET NO.
80/94	*	COOK	631	2
STA.		TO STA.		
FED. ROAD DIST. NO.		ILLINOIS	FED. AID PROJECT	

(2425 & 2626) R-2 CONTRACT NO. 62111

SHEET NO. DESCRIPTION

SHEET NO.	DESCRIPTION
1	COVER SHEET
2	INDEX OF SHEETS, STATE STANDARDS & KEY MAP
3 - 4	GENERAL NOTES
5 - 11	SUMMARY OF QUANTITIES
12	~~SUGGESTED CONSTRUCTION PROGRESS SCHEDULE~~ DELETED 1
13 - 21	TYPICAL SECTIONS
22 - 33	SCHEDULE OF QUANTITIES
34 - 39	HORIZONTAL ALIGNMENTS, TIES AND BENCHMARKS
40 - 48	ROADWAY PLANS
49 - 71	ROADWAY PROFILES
72 - 105	ROADWAY DETAILS
106 - 126	SOIL BORING LOCATION PLANS AND SOIL PROFILES
127 - 140A	PAVEMENT ELEVATIONS & JOINTING PLANS
141 - 183	MAINTENANCE OF TRAFFIC PLANS
184 - 198	EROSION AND SEDIMENT CONTROL PLANS
199 - 209	DRAINAGE AND UTILITY PLANS
210 - 211	DRAINAGE SCHEDULES
212 - 220	DRAINAGE PROFILES
221 - 224	DRAINAGE & UTILITY DETAILS
225 - 234	SUB-SURFACE UTILITY ENGINEERING PLANS
235 - 276	PLATS OF HIGHWAY
277 - 285	PAVEMENT MARKING AND LANDSCAPING PLANS
286 - 287	TEMPORARY TRAFFIC SIGNAL PLANS
288 - 299	ELECTRICAL RACEWAY PLANS
1 300 - 315	SIGNING PLANS
* 316 - 339	SIGN STRUCTURE PLANS
340 - 358	CIP RETAINING WALL S.N. 016-W850
359 - 372	CIP RETAINING WALL S.N. 016-W851
373 - 442	I-80/94 OVER RAILROAD AVENUE BRIDGE S.N. 016-2792
443 - 502	I-80/94 OVER BURNHAM AVENUE BRIDGE S.N. 016-2791
*503 - 521	DISTRICT ONE DETAILS
522 - 631	CROSS SECTIONS
1 * 339A-339K	BOX CULVERT SN 016-C013

STD. NO. DESCRIPTION

STD. NO.	DESCRIPTION
000001-04	STANDARD SYMBOLS, ABBREVIATIONS, AND PATTERNS
280001-02	TEMPORARY EROSION CONTROL SYSTEMS
420001-06	PAVEMENT JOINTS
420401-05	BRIDGE APPROACH PAVEMENT
421001-01	BAR REINFORCEMENT FOR CRC PAVEMENT
421201-04	7.2M (24') CRC PAVEMENT WITH LUG SYSTEM
421206-04	10.8M (36') CRC PAVEMENT WITH LUG SYSTEM
424001-04	CURB RAMPS FOR SIDEWALKS
515001-02	NAME PLATE FOR BRIDGES
542601	REINFORCED CONCRETE PIPE ELBOW
542606	REINFORCED CONCRETE PIPE TEE
602001	CATCH BASIN, TYPE A
602301	INLET, TYPE A
602401	MANHOLE, TYPE A
602601	PRECAST REINFORCED CONCRETE FLAT SLAB TOP
602701	CAST IRON STEPS
604001-02	FRAME AND GRATE, TYPE 1
604071-02	FRAME AND GRATE, TYPE 20
604081-02	FRAME AND GRATES, TYPE 22
604091-01	FRAME AND GRATES, TYPE 24
606001-02	CONCRETE CURB AND COMBINATION CONCRETE CURB AND GUTTER
630001-05	STEEL PLATE BEAM GUARDRAIL
630301-03	SHOULDER WIDENING FOR TYPE I GUARDRAIL TERMINALS
631031-05	TRAFFIC BARRIER TERMINAL, TYPE 6
635006-02	REFLECTOR AND TERMINAL MARKER PLACEMENT
635011-01	REFLECTOR MARKER AND MOUNTING DETAILS
637001-02	CONCRETE BARRIER, DOUBLE FACE, 815mm HEIGHT
637006	CONCRETE BARRIER, DOUBLE FACE, 1065mm HEIGHT
638001-01	GLARE SCREEN BLADES
642001	SHOULDER RUMBLE STRIPS
701001-01	OFF-ROAD OPERATIONS, 2L 2W, 4.5m (15') MIN. AWAY FOR SPEEDS > OR = 45 MPH
701006-02	OFF-ROAD OPERATIONS, 2L 2W, 4.5m (15') TO PAVEMENT EDGE, FOR SPEEDS > OR = 45 MPH
701101-01	OFF-ROAD OPERATIONS, MULTILANE LESS THAN 4.5M AWAY FOR SPEEDS > OR = 45 MPH
701400-02	APPROACH TO LANE CLOSURE, FREEWAY/EXPRESSWAY
701401-03	LANE CLOSURE, FREEWAY/EXPRESSWAY
701402-05	LANE CLOSURE, FREEWAY/EXPRESSWAY, WITH BARRIER
701411-03	LANE CLOSURE, MULTILANE AT ENTRANCE OR EXIT RAMP FOR SPEEDS > OR = 45 MPH
701426-02	LANE CLOSURE, MULTIL., INTERMITTENT OR MOVING OPER., FOR SPEEDS > 45 MPH
701431-03	LANE CLOSURE, MULTIL., UNDIV. W/CROSSOVER, FOR SPEEDS 45 MPH TO 55 MPH
701446	TWO LANE CLOSURE, FREEWAY/EXPRESSWAY
701606-04	LANE CLOSURE, MULTILANE, 2W, WITH MOUNTABLE MEDIAN, FOR SPEEDS < 45 MPH
701701-04	LANE CLOSURE, MULTILANE, INTERSECTION, FOR SPEEDS < 45 MPH
701801-03	LANE CLOSURE, MULTILANE, 1W OR 2W, CROSSWALK OR SIDEWALK CLOSURE, FOR SPEEDS < 45 MPH
702001-05	TRAFFIC CONTROL DEVICES
704001-02	TEMPORARY CONCRETE BARRIER
720001	SIGN PANEL MOUNTING DETAILS
720006	SIGN PANEL ERECTION DETAILS
720011	METAL POSTS (SIGNS, MARKERS AND DELINEATORS)
720021-01	SIGN PANELS, EXTRUDED ALUMINUM TYPE
729001	APPLICATION OF TYPE A AND B METAL POSTS
880001	SPAN WIRE MOUNTED SIGNALS AND FLASHING BEACON INSTALLATION
886001	DETECTOR LOOP INSTALLATIONS
857001	STANDARD PHASE DESIGNATION DIAGRAMS AND PHASE SEQUENCES

* included as plan sheets 503-521
INSERTED DISTRICT 1 DETAILS

BD01	DRIVEWAY DETAILS - DISTANCE BETWEEN ROW AND FACE OF CURB / EDGE >= 4.5 m (15')
BD07	STORM SEWER CONNECTION TO EXISTING SEWER
BD37	MANHOLE TYPE A 7 FT. DIAMETER
BD48	PCC PAVEMENT ROUNDOUTS AT CURB & GUTTER
CS07 (m)	CATCH BASIN AND INLET 1.2 x 0.9 AND 1.2 x 1.5 FOR H LESS THAN OR EQUAL TO 2.4
CS08 (m)	CATCH BASIN AND INLET 1.2 x 0.9 AND 1.2 x 1.5 FOR H > 2.4
CS09 (m)	CATCH BASIN TYPES 2.4mx0.9m & 2.4mx1.5m FOR H LESS THAN OR EQUAL TO 2.4
CS10A (m)	DRAINAGE STRUCTURES CATCH BASINS 2.4mx0.9m & 2.4mx1.5m FOR DEPTHS WHERE H >2.4m SHEET 1 OF 2
CS10B (m)	DRAINAGE STRUCTURES CATCH BASINS 2.4mx0.9m & 2.4mx1.5m FOR DEPTHS WHERE H >2.4m SHEET 2 OF 2
TC08	ENTRANCE AND EXIST RAMP CLOSURE DETAILS
TC09	TRAFFIC CONTROL DETAILS FOR FREEWAY SINGLE & MULTI-LANE WEAVE
TC10	TRAFFIC CONTROL AND PROTECTION FOR SIDE ROADS, INTERSECTIONS, AND DRIVEWAYS
TC11	RAISED REFLECTIVE PAVEMENT MARKERS (SNOW PLOW RESISTANT)
TC12	MULTI-LANE FREEWAY PAVEMENT MARKING
TC13	DISTRICT ONE TYPICAL PAVEMENT MARKINGS
TC16	PAVEMENT MARKING LETTERS AND SYMBOLS FOR TRAFFIC STAGING
TC17	TRAFFIC CONTROL FOR SHOULDER CLOSURES AND PARTIAL RAMP CLOSURES
TC18	SIGNING FOR FLAGGING OPERATIONS AT WORK ZONE OPENINGS

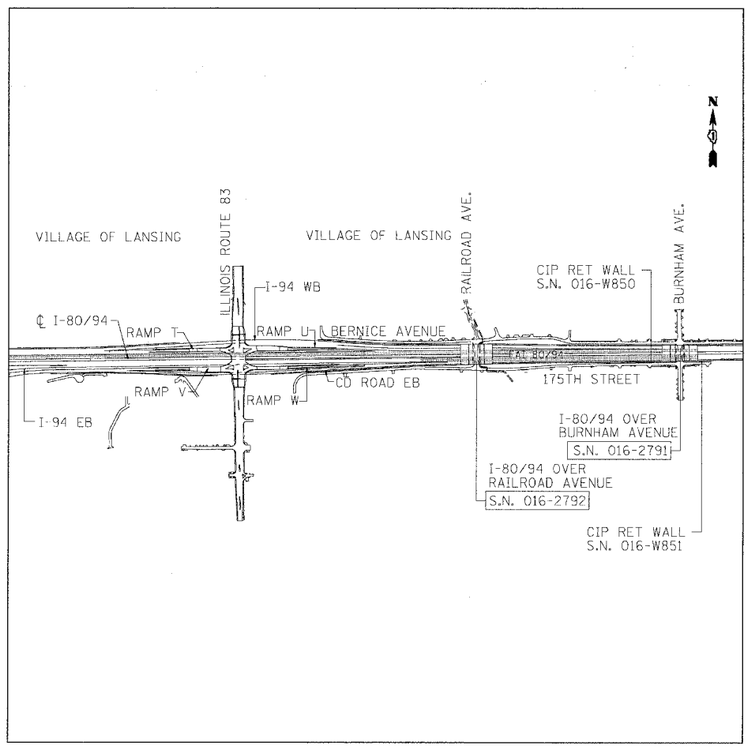

PROJECT KEYMAP

1 Rev. 1-6-06

Rev.

REVISIONS	
NAME	DATE

ILLINOIS DEPARTMENT OF TRANSPORTATION
F.A.I. ROUTE 80/94 (KINGERY EXPRESSWAY)
EB & WB INSIDE LANES (MAINLINE) CONSTRUCTION
COOK COUNTY

INDEX OF SHEETS
STATE STANDARDS & KEY MAP

SCALE: NONE
DATE: 8/22/05
DRAWN BY: JFS
CHECKED BY: MCD

TENG
TENG & ASSOCIATES, INC.
ENGINEERS/ARCHITECTS/PLANNERS
CHICAGO, ILLINOIS

BAJZEKKJ

..\A99900IZ4.DGN, ..\FPB3R0IZ4.DGN
8-18-2005, 10:06:32
F:\DOCUMENT\93175D\CIVIL\DGN\ST0012A.DGN

F.A.I. RTE.	SECTION	COUNTY	TOTAL SHEETS	SHEET NO.
80/94	*	COOK	631	5
STA.		TO STA.		
FED. ROAD DIST. NO.		ILLINOIS	FED. AID PROJECT	

* (2425 & 2626) R-2 CONTRACT NO. 62111

SUMMARY OF QUANTITIES

	CODE NO.	ITEM	UNIT	URBAN TOTAL QUANTITY		I-80 ** J000-2A	RAILROAD, BURNHAM, 175TH ST., BERNICE ** I000-2A	BRIDGE ** 016-2791 X271-2A	BRIDGE ** 016-2792 X281-2A	RETAINING WALLS ** Y007	SURVEILLANCE ** Y032-1F	LANSING **** I000-2A		SIGNING ** Y002-1C			TRAFFIC SIGNALS ## Y031-1F	
	28000510	INLET FILTERS	EACH	146	1	99	1 47											
	50100300	REMOVAL OF EXISTING STRUCTURES NO. 1	EACH	1					1									
	50100400	REMOVAL OF EXISTING STRUCTURES NO. 2	EACH	1				1										
	50300310	ELASTOMERIC BEARING ASSEMBLY, TYPE I	EACH	64					64									
	50500505	STUD SHEAR CONNECTORS	EACH	15885				15885										
	51203200	TEST PILE METAL SHELLS	EACH	2						2								
	51500100	NAME PLATES	EACH	2				1	1									
	60234200	INLETS, TYPE A, TYPE 1 FRAME, OPEN LID	EACH	8			8											
	60237470	INLETS, TYPE A, TYPE 24 FRAME AND GRATE	EACH	3			3											
	60250200	CATCH BASINS TO BE ADJUSTED	EACH	45		41	4											
	60253800	CATCH BASINS TO BE RECONSTRUCTED WITH NEW TYPE 8 GRATE	EACH	2			2											
	60255500	MANHOLES TO BE ADJUSTED	EACH	11		3	8											
	60257900	MANHOLES TO BE RECONSTRUCTED	EACH	5			5											
	60300105	FRAMES AND GRATES TO BE ADJUSTED	EACH	1			1											
	60500040	REMOVING MANHOLES	EACH	68	1	53	1 15											
	60500050	REMOVING CATCH BASINS	EACH	9		5	4											
	60500060	REMOVING INLETS	EACH	18		8	10											
	67100100	MOBILIZATION	L SUM	1		1												
	70101800	TRAFFIC CONTROL AND PROTECTION (SPECIAL)	L SUM	1			1											
	70102550	TRAFFIC CONTROL AND PROTECTION FOR TEMPORARY DETOUR	EACH	1			1											
*	73100100	BASE FOR TELESCOPING STEEL SIGN SUPPORT	EACH	4										4				
	73700100	REMOVE GROUND-MOUNTED SIGN SUPPORT	EACH	3		3												
	73700300	REMOVE CONCRETE FOUNDATION - OVERHEAD	EACH	1		1												
*	78100100	RAISED REFLECTIVE PAVEMENT MARKER	EACH	1856		1856												
*	78100105	RAISED REFLECTIVE PAVEMENT MARKER (BRIDGE)	EACH	112		112												
	78200100	MONODIRECTIONAL PRISMATIC BARRIER REFLECTOR	EACH	821		821												
	78200530	BARRIER WALL MARKERS, TYPE C	EACH	170		170												
*	81400100	HANDHOLE	EACH	1													1	
*	88200210	TRAFFIC SIGNAL BACKPLATE, LOUVERED, ALUMINUM	EACH	8													8	
*	89000100	TEMPORARY TRAFFIC SIGNAL INSTALLATION	EACH	1													1	
*	89502375	REMOVE EXISTING TRAFFIC SIGNAL EQUIPMENT	EACH	1													1	
*	89502380	REMOVE EXISTING HANDHOLE	EACH	1													1	
	M2010110	TREE REMOVAL (6 TO 15 UNITS DIAMETER)	UNIT	80			80											
	M2010210	TREE REMOVAL (OVER 15 UNITS DIAMETER)	UNIT	289		1	289											
	M2020010	EARTH EXCAVATION	CU M	38,985		32,960	6025											
	M2021200	REMOVAL AND DISPOSAL OF UNSUITABLE MATERIAL	CU M	1345		1	1345											
	M2040800	FURNISHED EXCAVATION	CU M	40,775		39,445	1330											
	M2070220	POROUS GRANULAR EMBANKMENT	CU M	1010		1010												
1	M2070400	POROUS GRANULAR EMBANKMENT, SPECIAL	CU M	1313				720	593									

*SPECIALTY ITEMS

**90% FEDERAL
10% STATE

***50% STATE
50% VILLAGE OF LANSING

****100% VILLAGE OF LANSING

*****100% CITY OF CHICAGO HEIGHTS

##90% FEDERAL
5% STATE
5% VILLAGE OF LANSING

1 Rev. 1-6-06
1 Rev. 12-7-05

REVISIONS	
NAME	DATE

ILLINOIS DEPARTMENT OF TRANSPORTATION
F.A.I. ROUTE 80/94 (KINGERY EXPRESSWAY)
EB & WB INSIDE LANES (MAINLINE) CONSTRUCTION
COOK COUNTY

SUMMARY OF QUANTITIES
I

SCALE: NONE
DATE: 9/13/05

DRAWN BY: SNM
CHECKED BY: KC

TENG
TENG & ASSOCIATES, INC.
ENGINEERS/ARCHITECTS/PLANNERS
CHICAGO, ILLINOIS

STANKRJ
FILNK 62 63
..\A8P9002A.DGN, ..\S0TR02A.DGN, ..\S0TR02A.DGN
9/14/2005 13:33 T:\DOCUMENTS\93750\CONL\DGN\S0TR002A.DGN
1 2 3 4 5 6 7 8 9 10 11 12 13 14 15 16 17 18 19 20 21 22 23 24 25 26 27 28 29 30 31 32 33 34 35 36 37 38 39 40 41 42 43 44 45 46 47 48 49 50 51 52 53 54 55 56 57 58 59 60 61 62 63

F.A.I. RTE.	SECTION	COUNTY	TOTAL SHEETS	SHEET NO.
80/94	*	COOK	631	6
STA.		TO STA.		
FED. ROAD DIST. NO.		ILLINOIS	FED. AID PROJECT	

* (2425 & 2626) R-2 CONTRACT NO. 62111

SUMMARY OF QUANTITIES

CODE NO.	ITEM	UNIT	URBAN TOTAL QUANTITY		I-80 **	RAILROAD, BURNHAM, 175TH ST., BERNICE **	BRIDGE ** 016-2791	BRIDGE ** 016-2792	RETAINING WALLS **	SURVEILLANCE **	LANSING ****	YOGO LANSING *****		SIDEWALK ***			
					J000-2A	I000-2A	X271-2A	X281-2A	Y007	Y032-1F	I000-2A			SFTY-1B			
M2080150	TRENCH BACKFILL	CU M	11,700		10,514	1183						3					
M2090410	SAND BACKFILL	CU M	1196		1196												
M2101000	GEOTECHNICAL FABRIC FOR GROUND STABILIZATION	SQ M	76043		76043												
M2113150	TOPSOIL FURNISH AND PLACE, 150MM	SQ M	3934			3934											
M2113300	TOPSOIL FURNISH AND PLACE, 300MM	SQ M	817			817											
M2114100	COMPOST FURNISH AND PLACE, 100MM	SQ M	817			817											
M2500210	SEEDING, CLASS 2A	HA	0.12		0.06	0.06											
M2500400	NITROGEN FERTILIZER NUTRIENT	KG	70			70											
M2500500	PHOSPHORUS FERTILIZER NUTRIENT	KG	70			70											
M2500600	POTASSIUM FERTILIZER NUTRIENT	KG	70			70											
M2510115	MULCH, METHOD 2	HA	0.12			0.12											
M2510630	EROSION CONTROL BLANKET	SQ M	2552		1025	1527											
M2520110	SODDING, SALT TOLERANT	SQ M	3519			3519											
M2520200	SUPPLEMENTAL WATERING	UNIT	36			36											
M2800200	EARTH EXCAVATION FOR EROSION CONTROL	CU M	2071		2035	36											
M2800250	TEMPORARY EROSION CONTROL SEEDING	KG	47		14	33											
M2810105	STONE RIPRAP, CLASS A3	SQ M	15			15											
M2820200	FILTER FABRIC	SQ M	15			15											
M3111100	SUB-BASE GRANULAR MATERIAL, TYPE B 100MM	SQ M	3076		3076												
M3111300	SUB-BASE GRANULAR MATERIAL, TYPE B 300MM	SQ M	76043		76043												
M3120150	STABILIZED SUB-BASE 150MM	SQ M	77581		77581												
M3511150	AGGREGATE BASE COURSE, TYPE B 150MM	SQ M	11599		10490						1109						
M4060200	BITUMINOUS MATERIALS (PRIME COAT)	M TON	32.2		6.9	25.3											
M4060895	CONSTRUCTING TEST STRIP	EACH	3		1	2											
M4202255	PORTLAND CEMENT CONCRETE PAVEMENT 250MM (JOINTED)	SQ M	2343		2343												
M4205050	BRIDGE APPROACH PAVEMENT (SPECIAL)	SQ M	1694				842	852									
M4205200	PROTECTIVE COAT	SQ M	1079			1079											
M4210360	CONTINUOUSLY REINFORCED PORTLAND CEMENT CONCRETE PAVEMENT 360MM	SQ M	52576		52576												
M4214360	PAVEMENT REINFORCEMENT 360MM	SQ M	52576		52576												
M4217088	LUG SYSTEM COMPLETE 8.8 METER	EACH	1		1												
M4217108	LUG SYSTEM COMPLETE 10.8 METER	EACH	1		1												
M4217144	LUG SYSTEM COMPLETE 14.4 METER	EACH	5		5												
M4230150	PORTLAND CEMENT CONCRETE DRIVEWAY PAVEMENT, 150MM	SQ M	547			547											
M4240125	PORTLAND CEMENT CONCRETE SIDEWALK 125MM	SQ M	822			665								157			
M4402000	PAVEMENT REMOVAL	SQ M	37587		29380	8207											
M4402010	DRIVEWAY PAVEMENT REMOVAL	SQ M	495			495											
M4402040	COMBINATION CURB AND GUTTER REMOVAL	METER	1056			1056											
M4402050	SIDEWALK REMOVAL	SQ M	757			757											

*SPECIALTY ITEMS

**90% FEDERAL
10% STATE

***50% STATE
50% VILLAGE OF LANSING

****100% VILLAGE OF LANSING

*****100% CITY OF CHICAGO HEIGHTS

##90% FEDERAL
5% STATE
5% VILLAGE OF LANSING

2 Rev. 1-6-06

Rev.

REVISIONS	
NAME	DATE

ILLINOIS DEPARTMENT OF TRANSPORTATION
F.A.I. ROUTE 80/94 (KINGERY EXPRESSWAY)
EB & WB INSIDE LANES (MAINLINE) CONSTRUCTION
COOK COUNTY

SUMMARY OF QUANTITIES
II

SCALE: NONE
DATE: 9/13/05

DRAWN BY: SNM
CHECKED BY: KC

TENG
TENG & ASSOCIATES, INC.
ENGINEERS/ARCHITECTS/PLANNERS
CHICAGO, ILLINOIS

..\S01TR02A.DGN..\AB99S02A.DGN..\S01TR02A.DGN
9-14-2005, 1:58:53 T:\DOCUMENT\95750\CIVIL\DGN\50170022A.DGN
STANJRJ
1 2 3 4 5 6 7 8 9 10 11 12 13 14 15 16 17 18 19 20 21 22 23 24 25 26 27 28 29 30 31 32 33 34 35 36 37 38 39 40 41 42 43 44 45 46 47 48 49 50 51 52 53 54 55 56 57 58 59 60 61 62 63

F.A.I. RTE.	SECTION	COUNTY	TOTAL SHEETS	SHEET NO.
80/94	*	COOK	631	7
STA.		TO STA.		
FED. ROAD DIST. NO.		ILLINOIS	FED. AID PROJECT	

* (2425 & 2626) R-2 CONTRACT NO. 62111

SUMMARY OF QUANTITIES

CODE NO.	ITEM	UNIT	URBAN TOTAL QUANTITY		I-80 ** J000-2A	RAILROAD, BURNHAM, 175TH ST., BERNICE ** I000-2A	BRIDGE ** 016-2791 X271-2A	BRIDGE ** 016-2792 X281-2A	RETAINING WALLS ** Y007	SURVEILLANCE ** Y032-1F	LANSING **** I000-2A	CULVERT SN016-C013 ** Y007					
M4402060	APPROACH SLAB REMOVAL	SQ M	1580		1580												
M4402280	CONCRETE BARRIER REMOVAL	METER	1877		1877												
M4402530	PAVED SHOULDER REMOVAL	SQ M	7307		7307												
M4402540	PAVEMENT BREAKING	SQ M	24,882		24,882												
M4830360	PORTLAND CEMENT CONCRETE SHOULDERS - 360MM	SQ M	23803		23803												
M5010240	CONCRETE REMOVAL	CUM	17.3		17.3												
M5020100	STRUCTURE EXCAVATION	CU M	3766				542	1379	1845								
M5030030	PREFORMED JOINT SEAL 64MM	METER	176.3				66.3	110									
M5030350	CONCRETE STRUCTURES	CU M	2048.6		4.4		537.7	504.8	1001.7								
M5030360	CONCRETE SUPERSTRUCTURE	CU M	1494.1				830.1	664									
M5030380	RUSTICATION FINISH	SQ M	668						668								
M5030390	BRIDGE DECK GROOVING	SQ M	5213				3037	2176									
M5030450	PROTECTIVE COAT	SQ M	15716		9124		3311	2392	889								
M5041372	FURNISHING AND ERECTING PRECAST PRESTRESSED CONCRETE I-BEAMS, 1372MM	METER	870.4					870.4									
M5050305	ERECTING STRUCTURAL STEEL	L SUM	1				1										
M5050405	FURNISHING AND ERECTING STRUCTURAL STEEL	KG	1810				210	1600									
M5080105	REINFORCEMENT BARS	KG	4580									4580					
M5080205	REINFORCEMENT BARS, EPOXY COATED	KG	439060				199770	151740	87550								
M5110100	SLOPE WALL 100 MM	SQ M	2280				1264	1016									
M5120160	FURNISHING STEEL PILES HP310X79	METER	5861				3267	2594									
M5120315	DRIVING STEEL PILES	METER	5861				3267	2594									
M5120460	TEST PILE STEEL HP310X79	EACH	4				2	2									
M5120115	FURNISHING METAL PILE SHELLS 356MM	METER	4104						4104								
M5120340	DRIVING AND FILLING SHELLS	METER	4104						4104								
M5403000	CONCRETE BOX CULVERT	CU M	32.2									32.2					
M5424225	PIPE CULVERTS, TYPE 2, REINFORCED CONCRETE - ELLIPTICAL, EQUIVALENT ROUND-SIZE 675MM	METER	17.5			17.5											
M5424230	PIPE CULVERTS, TYPE 2, REINFORCED CONCRETE - ELLIPTICAL, EQUIVALENT ROUND-SIZE 750MM	METER	10.5			10.5											
M5424235	PIPE CULVERTS, TYPE 2, REINFORCED CONCRETE - ELLIPTICAL, EQUIVALENT ROUND-SIZE 900MM	METER	98			98											
M542B112	REINFORCED CONCRETE PIPE ELBOW 300MM	EACH	7			7											
M542B160	REINFORCED CONCRETE PIPE ELBOW 1500MM	EACH	1			1											
M542V415	PIPE CULVERTS, CLASS D, TYPE 3 300MM (TEMPORARY)	METER	120		120												
M5503050	STORM SEWERS, TYPE 2, REINFORCED CONCRETE CULVERT, STORM DRAIN, AND SEWER PIPE, CLASS III, 300MM	METER	488		488												
M5503060	STORM SEWERS, TYPE 2, REINFORCED CONCRETE CULVERT, STORM DRAIN, AND SEWER PIPE, CLASS III, 375MM	METER	93.5		93.5												
M5503070	STORM SEWERS, TYPE 2, REINFORCED CONCRETE CULVERT, STORM DRAIN, AND SEWER PIPE, CLASS III, 450MM	METER	97		97												
M5503080	STORM SEWERS, TYPE 2, REINFORCED CONCRETE CULVERT, STORM DRAIN, AND SEWER PIPE, CLASS III, 525MM	METER	24.5		24.5												
M5503260	STORM SEWERS, TYPE 3, REINFORCED CONCRETE CULVERT, STORM DRAIN, AND SEWER PIPE, CLASS IV, 300MM	METER	108		108												
□ M5504800	STORM SEWERS TO BE CLEANED	METER	44			44											
M5505530	STORM SEWERS, RUBBER GASKET, CLASS A, TYPE 1 300MM	METER	28.5								28.5						
M5505930	STORM SEWERS, RUBBER GASKET, CLASS A, TYPE 2 300MM	METER	136			135					1						
M5510025	STORM SEWER REMOVAL 300MM	METER	828		588.5	239.5											
M5510035	STORM SEWER REMOVAL 375MM	METER	611		611												
M5510045	STORM SEWER REMOVAL 450MM	METER	363		363												

*SPECIALTY ITEMS

**90% FEDERAL
10% STATE

***50% STATE
50% VILLAGE OF LANSING

****100% VILLAGE OF LANSING

*****100% CITY OF CHICAGO HEIGHTS

**90% FEDERAL
5% STATE
5% VILLAGE OF LANSING

□ NON-PARTICIPATING

Rev. 1-6-06

REVISIONS	
NAME	DATE

ILLINOIS DEPARTMENT OF TRANSPORTATION
F.A.I. ROUTE 80/94 (KINGERY EXPRESSWAY)
EB & WB INSIDE LANES (MAINLINE) CONSTRUCTION
COOK COUNTY

SUMMARY OF QUANTITIES III

SCALE: NONE
DATE: 9/13/05
DRAWN BY: SNM
CHECKED BY: KC

TENG
TENG & ASSOCIATES, INC.
ENGINEERS/ARCHITECTS/PLANNERS
CHICAGO, ILLINOIS

..\SQTR02A.DGN..\SQTR02A.DGN..\A8996012A.DGN
9-14-2005,1:38:36 T:\DOCUMENT\STATION\CIVIL\DGN\SQTR0332A.DGN
STANDARD
1 2 3 4 5 6 7 8 9 10 11 12 13 14 15 16 17 18 19 20 21 22 23 24 25 26 27 28 29 30 31 32 33 34 35 36 37 38 39 40 41 42 43 44 45 46 47 48 49 50 51 52 53 54 55 56 57 58 59 60 61 62 63

F.A.I. RTE.	SECTION	COUNTY	TOTAL SHEETS	SHEET NO.
80/94	*	COOK	631	8
STA.		TO STA.		
FED. ROAD DIST. NO.	ILLINOIS	FED. AID PROJECT		

* (2425 & 2626) R-2 CONTRACT NO. 62111

SUMMARY OF QUANTITIES

CODE NO.	ITEM	UNIT	URBAN TOTAL QUANTITY		I-80 **	RAILROAD, BURNHAM, 175TH ST., BERNICE **	BRIDGE ** 016-2791	BRIDGE ** 016-2792	RETAINING WALLS **	SURVEILLANCE **	LANSING ****		SIGNING **				
					1000-2A	1000-2A	X271-2A	X281-2A	Y007	Y032-1F	1000-2A		Y002-1C				
M5510060	STORM SEWER REMOVAL 600MM	METER	155		155												
M5510095	STORM SEWER REMOVAL 1200MM	METER	266		59	207											
M5910100	GEOCOMPOSITE WALL DRAIN	SQ M	547						547								
M6010610	PIPE UNDERDRAINS 150MM	METER	4399		4399												
M6011105	PIPE UNDERDRAINS FOR STRUCTURES 150MM	METER	103						103								
M6020105	CATCH BASINS, TYPE A, 1.2M DIAMETER, TYPE 1 FRAME, OPEN LID	EACH	16		3	8					5						
M6020140	CATCH BASINS, TYPE A, 1.2M DIAMETER, TYPE 8 GRATE	EACH	6			6											
M6020185	CATCH BASINS, TYPE A, 1.2M DIAMETER, TYPE 24 FRAME AND GRATE	EACH	12			12											
M6021410	MANHOLES, TYPE A, 1.2M DIAMETER, TYPE 1 FRAME, CLOSED LID	EACH	3			1					2						
M6021810	MANHOLES, TYPE A, 1.8M DIAMETER, TYPE 1 FRAME, CLOSED LID	EACH	2			2											
M6022010	MANHOLES, TYPE A, 2.1M DIAMETER, TYPE 1 FRAME, CLOSED LID	EACH	2			2											
M6060070	CONCRETE CURB, TYPE B	METER	14			14											
M6060500	COMBINATION CONCRETE CURB AND GUTTER, TYPE B-15.30	METER	665			401					264						
M6060700	COMBINATION CONCRETE CURB AND GUTTER, TYPE B-15.60	METER	756			756											
M6063630	CONCRETE MEDIAN SURFACE, 150MM (SPECIAL)	SQ M	1132		1132												
M6320030	GUARDRAIL REMOVAL	METER	73		73												
M6370155	CONCRETE BARRIER, SINGLE FACE, 815 MM HEIGHT	METER	742		742												
M6370175	CONCRETE BARRIER, SINGLE FACE, 1065 MM HEIGHT	METER	58		58												
M6370255	CONCRETE BARRIER, DOUBLE FACE, 815MM HEIGHT	METER	435		435												
M6370275	CONCRETE BARRIER, DOUBLE FACE, 1065 MM HEIGHT	METER	2101		2101												
M6370805	CONCRETE BARRIER TRANSITION	METER	39		39												
△ MX033405	CONCRETE BARRIER BASE	METER	3850		3850												
⊙⊙ M6380600	MODULAR GLARE SCREEN SYSTEM	METER	364.7		364.7												
M6420015	SHOULDER RUMBLE STRIP	METER	13881		13881												
M7030210	TEMPORARY PAVEMENT MARKING - LETTERS AND SYMBOLS	SQ M	13			13											
M7030220	TEMPORARY PAVEMENT MARKING - LINE 100MM	METER	2401		2401												
M7030240	TEMPORARY PAVEMENT MARKING - LINE 150MM	METER	11426		10678	748											
M7030260	TEMPORARY PAVEMENT MARKING - LINE 300MM	METER	65		65												
M7030280	TEMPORARY PAVEMENT MARKING - LINE 600MM	METER	18		18												
M7030520	PAVEMENT MARKING TAPE, TYPE III 100MM	METER	12915		12915												
M7030530	PAVEMENT MARKING TAPE, TYPE III 125MM	METER	1092		1092												
M7030550	PAVEMENT MARKING TAPE, TYPE III 200MM	METER	1280		1280												
M7030560	PAVEMENT MARKING TAPE, TYPE III 300MM	METER	342		342												
M7031000	WORK ZONE PAVEMENT MARKING REMOVAL	SQ M	1886		1886												
M7040100	TEMPORARY CONCRETE BARRIER	METER	1277		903	374											
* M7200100	SIGN PANEL - TYPE 1	SQ M	30										30				
* M7200200	SIGN PANEL - TYPE 2	SQ M	13.7										13.7				
* M7200300	SIGN PANEL - TYPE 3	SQ M	155.2										155.2				

*SPECIALTY ITEMS

**90% FEDERAL
10% STATE

***50% STATE
50% VILLAGE OF LANSING

****100% VILLAGE OF LANSING

*****100% CITY OF CHICAGO HEIGHTS

**90% FEDERAL
5% STATE
5% VILLAGE OF LANSING

⊙⊙ SFT4-2A 90% FED./10% STATE

△1 Rev. 1-6-06
△2 Rev. 12-6-05

REVISIONS	
NAME	DATE

ILLINOIS DEPARTMENT OF TRANSPORTATION
F.A.I. ROUTE 80/94 (KINGERY EXPRESSWAY)
EB & WB INSIDE LANES (MAINLINE) CONSTRUCTION
COOK COUNTY

SUMMARY OF QUANTITIES IV

SCALE: NONE
DATE: 9/13/05

DRAWN BY: SNM
CHECKED BY: KC

TENG & ASSOCIATES, INC.
ENGINEERS/ARCHITECTS/PLANNERS
CHICAGO, ILLINOIS

STANKIRJ
6 5 7 5 8 5 9 6 0 6 1 6 2 6 3
\S01T0012A.DGN, \S01T0012A.DGN, \ABP90012A.DGN
9-14-2005 15:49:23
(A:\DOCUMENT\B2750\CIVIL\DGN\S01T0042A.DGN
1 2 3 4 5 6 7 8 9 10 11 12 13 14 15 16 17 18 19 20 21 22 23 24 25 26 27 28 29 30 31 32 33 34 35 36 37 38 39 40 41 42 43 44 45 46 47 48 49 50 51 52 53 54 55 56 57 58 59 60 61 62 63

F.A.I. RTE.	SECTION	COUNTY	TOTAL SHEETS	SHEET NO.
80/94	*	COOK	631	9
STA.		TO STA.		
FED. ROAD DIST. NO.		ILLINOIS	FED. AID PROJECT	

* (2425 & 2626) R-2 CONTRACT NO. 62111

SUMMARY OF QUANTITIES

	CODE NO.	ITEM	UNIT	URBAN TOTAL QUANTITY		I-80 **	RAILROAD, BURNHAM, 175TH ST., BERNICE **	BRIDGE ** 016-2791	BRIDGE ** 016-2792	RETAINING WALLS **	SURVEILLANCE **	LANSING ****	LANSING ****	SIGNING **	CULVERT		TRAFFIC SIGNALS ##	CHICAGO HEIGHTS *****
						J000-2A	I000-2A	X271-2A	X281-2A	Y007	Y032-1F	I000-2A	Y060	Y002-1C	Y007		Y031-1F	Y060
	M7240320	REMOVE SIGN PANEL - TYPE 2	SQ M	26.3										26.3				
	M7240330	REMOVE SIGN PANEL - TYPE 3	SQ M	57.9										57.9				
	M7240720	RELOCATE SIGN PANEL - TYPE 2	SQ M	1.1										1.1				
*	M7280100	TELESCOPING STEEL SIGN SUPPORT	METER	38										38				
*	M7330030	OVERHEAD SIGN STRUCTURE - SPAN, TYPE III-A (1.53M X 2.14M)	METER	34.2										34.2				
*	M7330235	OVERHEAD SIGN STRUCTURE - CANTILEVER, TYPE II-C-A (0.90M X 1.68M)	METER	8.4										8.4				
*	M7330255	OVERHEAD SIGN STRUCTURE - CANTILEVER, TYPE III-C-A (0.90M X 2.14M)	METER	9.2										9.2				
*	M7330500	OVERHEAD SIGN STRUCTURE WALKWAY	METER	39.6										39.6				
*	M7340200	DRILLED SHAFT CONCRETE FOUNDATIONS	CU M	16.4										16.4				
*	M7800105	THERMOPLASTIC PAVEMENT MARKING - LINE 100MM	METER	1513			1513											
*	M7800115	THERMOPLASTIC PAVEMENT MARKING - LINE 150MM	METER	99								99						
*	M7800125	THERMOPLASTIC PAVEMENT MARKING - LINE 300MM	METER	137			137											
*	M7800140	THERMOPLASTIC PAVEMENT MARKING - LINE 600MM	METER	63			63											
*	M7800605	EPOXY PAVEMENT MARKING - LINE 100MM	METER	2002		2002												
*	M7800610	EPOXY PAVEMENT MARKING - LINE 125MM	METER	917		917												
*	M7800615	EPOXY PAVEMENT MARKING - LINE 150MM	METER	752		752												
*	M7802010	POLYUREA PAVEMENT MARKING, TYPE I - LINE 100MM	METER	9801		9801												
*	M7802012	POLYUREA PAVEMENT MARKING, TYPE I - LINE 125MM	METER	4604		4604												
*	M7802020	POLYUREA PAVEMENT MARKING, TYPE I - LINE 200MM	METER	2916		2916												
*	M7802030	POLYUREA PAVEMENT MARKING, TYPE I - LINE 300MM	METER	1013		1013												
	M7830100	PAVEMENT MARKING REMOVAL	SQ M	2688		2688												
*	M8120130	CONDUIT EMBEDDED IN STRUCTURE, 65 MM DIA. GALVANIZED STEEL	METER	160							160							
*	M8120230	CONDUIT EMBEDDED IN STRUCTURE, 50 MM DIA. PVC	METER	305							305							
*	M8120270	CONDUIT EMBEDDED IN STRUCTURE, 100 MM DIA. PVC	METER	72							72							
*	M8131400	JUNCTION BOX, NON-METALLIC, EMBEDDED IN STRUCTURE, 525MM X 275MM X 200MM	EACH	2							2							
*	M8860100	DETECTOR LOOP, TYPE I	METER	71													71	
*	M8950235	REMOVE AND REINSTALL ELECTRIC CABLE FROM CONDUIT	METER	74													74	
*	MX030063	STORM SEWER (WATER MAIN REQUIREMENTS) 300MM	METER	210.5			193.1						17.1					0.3
*	MX030067	STORM SEWER (WATER MAIN REQUIREMENTS) 900MM	METER	95.5			49						37.4					9.1
	MX030144	CATCH BASINS, 1.2M BY 0.9M SPECIAL, TYPE 20 FRAME AND GRATE	EACH	10		10												
	MX030151	STORM SEWER, DUCTILE IRON PIPE, TYPE 1 200MM	METER	2								2						
	MX030170	CATCH BASINS, 1.2M BY 1.5M SPECIAL, TYPE 22 FRAME AND GRATE	EACH	1		1												
	MX030199	TEMPORARY PAVEMENT	SQ M	295		295												
	MX030504	TEMPORARY PAVEMENT (INTERSTATE)	SQ M	2813		2813												
	MX030508	REMOVAL OF TEMPORARY SOIL RETENTION SYSTEM	SQ M	403					345						58			
*	MX032160	CONDUIT ENCASED, REINFORCED CONCRETE, 100MM DIA. PVC, 2 WIDE X 1 HIGH	METER	300							300							
	MX033183	SOIL STABILIZERS	KG	68017		68017												
	MX033234	SLOTTED DRAIN REMOVAL	METER	623		623												

*SPECIALTY ITEMS

**90% FEDERAL
10% STATE

***50% STATE
50% VILLAGE OF LANSING

****100% VILLAGE OF LANSING

*****100% CITY OF CHICAGO HEIGHTS

##90% FEDERAL
5% STATE
5% VILLAGE OF LANSING

Rev. 1-6-06

REVISIONS	
NAME	DATE

ILLINOIS DEPARTMENT OF TRANSPORTATION
F.A.I. ROUTE 80/94 (KINGERY EXPRESSWAY)
EB & WB INSIDE LANES (MAINLINE) CONSTRUCTION
COOK COUNTY

SUMMARY OF QUANTITIES
V

SCALE: NONE
DATE: 9/13/05
DRAWN BY: SNM
CHECKED BY: KC

TENG & ASSOCIATES, INC.
ENGINEERS/ARCHITECTS/PLANNERS
CHICAGO, ILLINOIS

..\S07TR02A.DGN, ..\S07TR02A.DGN, ..\A8P09002A.DGN
9/14/2005 3:24:41 PM F:\DOT\MUNTY\92975\DVL\DGN\S07TR05A.DGN
STANKRJ

F.A.I. RTE.	SECTION	COUNTY	TOTAL SHEETS	SHEET NO.
80/94	*	COOK	631	10
STA.		TO STA.		
FED. ROAD DIST. NO.		ILLINOIS	FED. AID PROJECT	

* (2425 & 2626) R-2 CONTRACT NO. 62111

SUMMARY OF QUANTITIES

CODE NO.	ITEM	UNIT	URBAN TOTAL QUANTITY		I-80 ** J000-2A	RAILROAD, BURNHAM, 175TH ST., BERNICE ** I000-2A	BRIDGE ** 016-2791 X271-2A	BRIDGE ** 016-2792 X281-2A	RETAINING WALLS ** Y007	SURVEILLANCE ** Y032-1F	LANSING **** I000-2A	CULVERT SN016-C013 Y007				TRAFFIC SIGNALS ## Y031-1F	
MX033276	TEMPORARY SOIL RETENTION SYSTEM	SQ M	761	△1				124				37	△1				
MX033290	SEDIMENT CONTROL, SILT FENCE	METER	612		265	347											
MX033291	SEDIMENT CONTROL, SILT FENCE, MAINTENANCE	METER	612		265	347											
MX033292	SEDIMENT CONTROL, STABILIZED CONSTRUCTION ENTRANCE	SQ M	1622		811	811											
MX033303	SEDIMENT CONTROL, STABILIZED CONSTRUCTION ENTRANCE MAINTENANCE	SQ M	406		203	203											
MX355150	BITUMINOUS BASE COURSE SUPERPAVE, 150MM	SQ M	143			143											
MX355200	BITUMINOUS BASE COURSE SUPERPAVE, 200MM	SQ M	76			76											
MX406012	BITUMINOUS CONCRETE SURFACE COURSE, SUPERPAVE, MIX "C", N50	M TON	1589.1		1253.3	26.1					309.7						
MX407380	BITUMINOUS CONCRETE PAVEMENT (FULL-DEPTH), SUPERPAVE, 230MM	SQ M	4242			2644					1598						
MX407450	BITUMINOUS CONCRETE PAVEMENT (FULL-DEPTH), SUPERPAVE, 300MM	SQ M	5665			5665											
MX482280	BITUMINOUS SHOULDERS SUPERPAVE 150MM	SQ M	250		250												
MX512015	TEMPORARY SHEET PILING REMOVAL	SQ M	3434		3274		160										
MX704200	REMOVE TEMPORARY CONCRETE BARRIER	METER	5339		5339												
MZ001050	AGGREGATE SUBGRADE 300MM	SQ M	10787			9061					1726						
MZ031106	TEMPORARY MECHANICALLY STABILIZED EARTH RETAINING WALL	SQ M	510					510									
MZ047300	PROTECTIVE SHIELD	SQ M	1164				1164										
MZ065755	SLOTTED DRAIN 300MM WITH VARIABLE SLOT HEIGHT	METER	96.9		96.9												
X0322916	PROPOSED STORM SEWER CONNECTION TO EXISTING STORM SEWER	EACH	10			10											
X0322917	PROPOSED STORM SEWER CONNECTION TO EXISTING MANHOLE	EACH	2		1	1											
X0323426	SEDIMENT CONTROL, DRAINAGE STRUCTURE INLET FILTER CLEANING	EACH	146		99	47											
X0324044	EROSION CONTROL, TEMPORARY PIPE SLOPE DRAIN	EACH	12		11	1											
X0324045	SEDIMENT CONTROL, STABILIZED CONSTRUCTION ENTRANCE REMOVAL	EACH	8		8												
X0324587	NOISE ABATEMENT WALL ANCHOR ROD ASSEMBLY	EACH	45			21			24								
X0324698	APPLYING DUST SUPPRESSION AGENT	UNIT	489		489												
X4021000	TEMPORARY ACCESS (PRIVATE ENTRANCE)	EACH	20			20											
X6020166	DRAINAGE STRUCTURES, TYPE 1 SPECIAL WITH TWO TYPE 20 FRAME AND GRATES	EACH	14		14												
X6020167	DRAINAGE STRUCTURES, TYPE 2 SPECIAL WITH TWO TYPE 22 FRAME AND GRATES	EACH	1		1												
* X7011015	TRAFFIC CONTROL AND PROTECTION (EXPRESSWAYS)	L SUM	1		1												
* X7013820	TRAFFIC CONTROL SURVEILLANCE, EXPRESSWAYS	CAL DA	240		240												
* X7015000	CHANGEABLE MESSAGE SIGN	CAL MO	10		10												
* X8800020	SIGNAL HEAD ,LED, 1-FACE, 3-SECTION, MAST-ARM MOUNTED	EACH	4												4		
* X8800037	SIGNAL HEAD ,LED, 1-FACE, 4-SECTION, BRACKET MOUNTED	EACH	2												2		
* X8800038	SIGNAL HEAD ,LED, 1-FACE, 4-SECTION, MAST ARM MOUNTED	EACH	2												2		
* X8800040	SIGNAL HEAD ,LED, 1-FACE, 5-SECTION, BRACKET MOUNTED	EACH	2												2		
* X8800045	SIGNAL HEAD ,LED, 1-FACE, 5-SECTION, MAST-ARM MOUNTED	EACH	2												2		
* X8810610	PEDESTRIAN SIGNAL HEAD, LED, 1-FACE, BRACKET MOUNTED	EACH	8												8		
XX001452	CONCRETE MASONRY BULKHEAD	EACH	11		5	6											
Z0002600	BAR SPLICERS	EACH	1506				1242	264									

*SPECIALTY ITEMS

**90% FEDERAL
10% STATE

***50% STATE
50% VILLAGE OF LANSING

****100% VILLAGE OF LANSING

*****100% CITY OF CHICAGO HEIGHTS

##90% FEDERAL
5% STATE
5% VILLAGE OF LANSING

△1 Rev. 1-6-06

Rev.

REVISIONS	
NAME	DATE

ILLINOIS DEPARTMENT OF TRANSPORTATION
F.A.I. ROUTE 80/94 (KINGERY EXPRESSWAY)
EB & WB INSIDE LANES (MAINLINE) CONSTRUCTION
COOK COUNTY

SUMMARY OF QUANTITIES VI

SCALE: NONE
DATE: 9/13/05

DRAWN BY: SNM
CHECKED BY: KC

TENG

TENG & ASSOCIATES, INC.
ENGINEERS/ARCHITECTS/PLANNERS
CHICAGO, ILLINOIS

..\SOI\R002A.DGN, ..\SOI\R002A.DGN, ..\A2900002A.DGN STANKRJ
9-14-2005,13:38:43 T:\DOCUMENT\95\95C01\VI\.DGN\S0I70072A.DGN
1 2 3 4 5 6 7 8 9 10 11 12 13 14 15 16 17 18 19 20 21 22 23 24 25 26 27 28 29 30 31 32 33 34 35 36 37 38 39 40 41 42 43 44 45 46 47 48 49 50 51 52 53 54 55 56 57 58 59 60 61 62 63

F.A.I. RTE.	SECTION	COUNTY	TOTAL SHEETS	SHEET NO.
80/94	*	COOK	631	11
STA.		TO STA.		
FED. ROAD DIST. NO.		ILLINOIS	FED. AID PROJECT	

* (2425 & 2626) R-2 CONTRACT NO. 62111

SUMMARY OF QUANTITIES

	CODE NO.	ITEM	UNIT	URBAN TOTAL QUANTITY		I-80 ** J000-2A	RAILROAD, BURNHAM, 175TH ST., BERNICE ** 1000-2A	BRIDGE ** 016-2791 X271-2A	BRIDGE ** 016-2792 X281-2A	RETAINING WALLS ** Y007-	SURVEILLANCE ** Y032-1F			SIGNING ** Y002-1C				
*	MX033555	PAINT PAVEMENT MARKING - LINE 125MM (SPECIAL)	METER	61		61												
	M4198000	DETECTABLE WARNINGS	SQ M	18			18											
	MX033467	WICK DRAINS	METER	25274		25274												
	MX033560	CONCRETE BARRIER SINGLE FACE 815MM HEIGHT, REINFORCED	METER	475		475												
*	X0325130	TUBULAR TRAFFIC SIGN POST	EACH	11										11				
*	X0325174	SIGN STRUCTURE ATTACHED TO PARAPET - ONE POST	EACH	3										3				
*	X0325175	SIGN STRUCTURE ATTACHED TO PARAPET - TWO POSTS	EACH	1										1				
⊙⊙	MX033559	CONCRETE GLARE SCREEN, SPECIAL	METER	45.6		45.6												
	MX033566	PORTLAND CEMENT CONCRETE PAVEMENT 250MM (JOINTED) (COLORED)	SQ M	751		751												
	M7040210	RELOCATE TEMPORARY CONCRETE BARRIER (SPECIAL)	METER	3162		3162												
	M4217150	LUG SYSTEM COMPLETE 15.0 METER	EACH	1		1												
	X6040300	FRAMES AND GRATES, TYPE 20 (SPECIAL)	EACH	8		8												
	X6040305	FRAMES AND GRATES, TYPE 22 (SPECIAL)	EACH	2		2												
	MX033561	DUCTILE IRON PIPE, STORM SEWER, 150MM	METER	86.5		86.5												
	MX033562	DUCTILE IRON PIPE, STORM SEWER, 200MM	METER	1.5			1.5											
	MX030505	STORM SEWERS TO BE GROUTED	CU M	1488		1319	169											
	MX030506	CULVERTS GROUTED	CU M	425		425												
*	MX033556	CONDUIT EMBEDDED IN STRUCTURE, 30 MM DIA. CNC, 4 WIDE X 2 HIGH	METER	2065							2065							
*	MX033557	CONDUIT IN TRENCH, 3-100MM DIA., RIGID GALV STEEL	METER	100							100							
*	MX033558	CONDUIT ATTACHED TO STRUCTURE, 3-100MM DIA., RIGID GALV STEEL, PVC COATED	METER	122							122							
*	MX033565	CONDUIT ENCASED, REINFORCED CONCRETE, 30 MM DIA. CNC, 4 WIDE X 2 HIGH	METER	96							96							
*	MX033563	COILABLE NONMETALLIC CONDUIT, 25MM DIA. (INNERDUCT)	METER	1098							1098							
	Z0002605	BAR SPLICERS, SPECIAL	EACH	84		84												
	Z0013798	CONSTRUCTION LAYOUT	L SUM	1		0.9	0.1											
	Z0018400	DRAINAGE STRUCTURES TO BE ADJUSTED	EACH	27		27												
□	Z0018500	DRAINAGE STRUCTURES TO BE CLEANED	EACH	2														
	Z0018600	DRAINAGE STRUCTURE TO BE RECONSTRUCTED	EACH	2		2	2											
Δ*	Z0030070	IMPACT ATTENUATORS (SEVERE USE, NARROW), TEST LEVEL 3	EACH	2		2												
Δ*	Z0030240	IMPACT ATTENUATORS, TEMPORARY (NON- REDIRECTIVE), TEST LEVEL 2	EACH	2		2												
Δ*	Z0030250	IMPACT ATTENUATORS, TEMPORARY (NON-REDIRECTIVE), TEST LEVEL 3	EACH	7		7												
Δ	Z0056220	SAND MODULE IMPACT ATTENUATOR TO BE REMOVED	EACH	4		4												
⊙	Z0076600	TRAINEES	HOUR	500		500												
	M5503090	STORM SEWERS, TYPE 2, REINFORCED CONCRETE CULVERT, STORM DRAIN AND SEWER PIPE, CLASS III, 600 MM	METER	147.4		147.4												
	M5503111	STORM SEWERS, TYPE 2, REINFORCED CONCRETE CULVERT, STORM DRAIN AND SEWER PIPE, CLASS III, 750 MM	METER	221.1		221.1												
	M5503130	STORM SEWERS, TYPE 2, REINFORCED CONCRETE CULVERT, STORM DRAIN AND SEWER PIPE, CLASS III, 900 MM	METER	41.0		41.0												
	M5503150	STORM SEWERS, TYPE 2, REINFORCED CONCRETE CULVERT, STORM DRAIN AND SEWER PIPE, CLASS III, 1200 MM	METER	14.1		14.1												
	M5503170	STORM SEWERS, TYPE 2, REINFORCED CONCRETE CULVERT, STORM DRAIN AND SEWER PIPE, CLASS II, 1500 MM	METER	64.6		64.6												
	M5503180	STORM SEWERS, TYPE 2, REINFORCED CONCRETE CULVERT, STORM DRAIN AND SEWER PIPE, CLASS II, 1650 MM	METER	147.4		147.4												
	M5503390	STORM SEWERS, TYPE 3, REINFORCED CONCRETE CULVERT, STORM DRAIN AND SEWER PIPE, CLASS IV, 1650 MM	METER	389.5		389.5												

*SPECIALTY ITEMS

**90% FEDERAL
10% STATE

***50% STATE
50% VILLAGE OF LANSING

****100% VILLAGE OF LANSING

*****100% CITY OF CHICAGO HEIGHTS

##90% FEDERAL
5% STATE
5% VILLAGE OF LANSING

⊙⊙ SFTY-2A 90% FED./10% STATE
□ NON-PARTICIPATING
⊙ Y080
Δ SFTY-3N

Rev. 1-6-06

Rev.

REVISIONS	
NAME	DATE

ILLINOIS DEPARTMENT OF TRANSPORTATION
F.A.I. ROUTE 80/94 (KINGERY EXPRESSWAY)
EB & WB INSIDE LANES (MAINLINE) CONSTRUCTION
COOK COUNTY

SUMMARY OF QUANTITIES VII

SCALE: NONE
DATE: 9/13/05

DRAWN BY: SNM
CHECKED BY: KC

TENG

TENG & ASSOCIATES, INC.
ENGINEERS/ARCHITECTS/PLANNERS
CHICAGO, ILLINOIS

STANKRJ
..\S0TR002A.DGN, ..\S0TR002A.DGN, ..\S0TR002A.DGN, ..\BR9002A.DGN
9/14/2005 15:56:46 T:\DOCUMENT\193770\CIVIL\DGN\S0TCHK2A.DGN
1 2 3 4 5 6 7 8 9 10 11 12 13 14 15 16 17 18 19 20 21 22 23 24 25 26 27 28 29 30 31 32 33 34 35 36 37 38 39 40 41 42 43 44 45 46 47 48 49 50 51 52 53 54 55 56 57 58 59 60 61 62 63

F.A.I. RTE.	SECTION	COUNTY	TOTAL SHEETS	SHEET NO.
80/94	*	COOK	631	13
STA.		TO STA.		
FED. ROAD DIST. NO.		ILLINOIS	FED. AID PROJECT	

* (2425 & 2626) R-2 CONTRACT NO. 62111

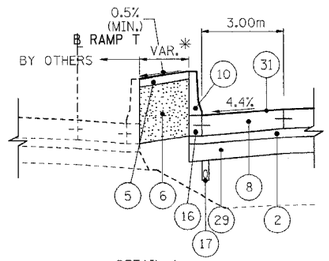

DETAIL A

STA. 4+776.296 TO STA. 4+893.208

*WIDTH VARIES FROM 0.30m TO 1.80m

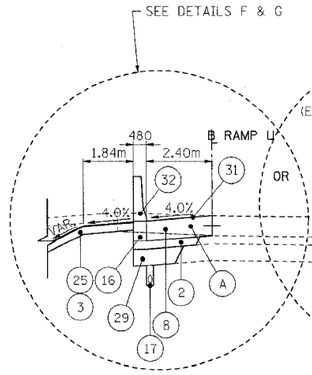

STA. 5+368.520 TO STA. 5+468.118

(RAMP U STA. 240+217.64 TO 240+317.391)

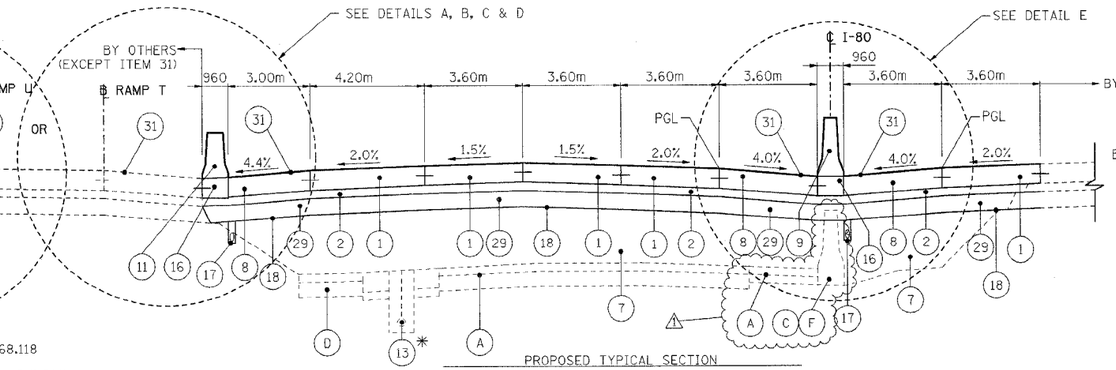

PROPOSED TYPICAL SECTION

I-80 WB/EB STA. 4+500.000 TO STA. 5+001.808 & STA. 5+299.708 TO STA. 5+502.007

* STA. 4+970.062 TO STA. 5+137.875 & STA. 5+166.329 TO STA. 5+369.953

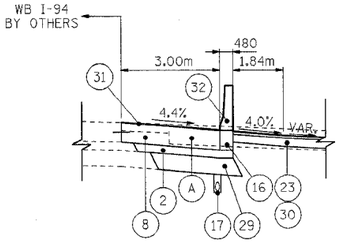

DETAIL G

STA. 5+460.960 TO STA. 5+502.007

(I-94 WB STA. 32+860.000 TO STA. 32+937.000

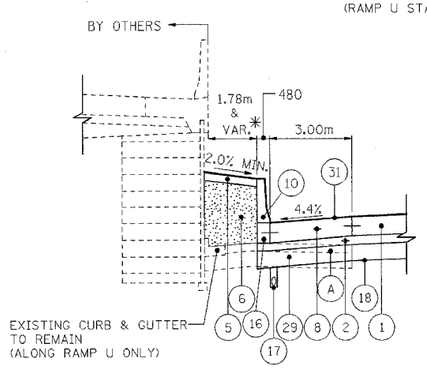

DETAIL B

STA. 4+893.208 TO STA. 5+001.808

& STA. 5+299.708 TO STA. 5+412.727

* WIDTH VARIES FROM 1.78m TO 2.24m

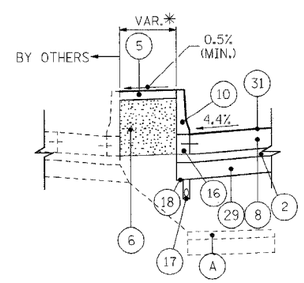

DETAIL C

STA. 5+412.727 TO STA. 5+439.538

*WIDTH VARIES FROM 2.24m TO 2.42m

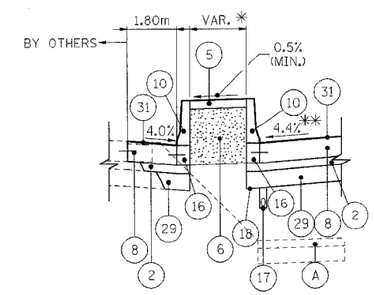

DETAIL D

STA. 5+439.598 TO STA. 5+502.007

* WIDTH VARIES FROM 2.35m TO 0.30m

** SLOPE VARIES 4.4% TO 1.5%
STA. 5+481.007 TO STA. 5+502.007

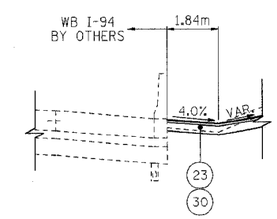

DETAIL F

STA. 5+326.876 TO STA. 5+460.960

(I-94 WB STA. 32+725.234 TO STA. 32+860.000)

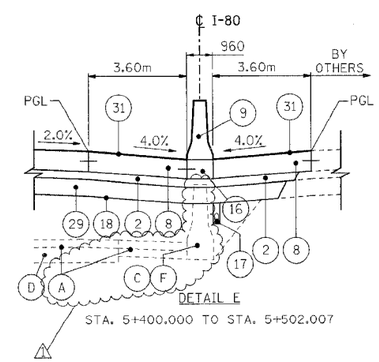

DETAIL E

STA. 5+400.000 TO STA. 5+502.007

NOTES

1. ALL UNITS ARE IN MILLIMETERS UNLESS OTHERWISE NOTED.
2. SUB-BASE GRANULAR MATERIAL, TYPE B, 300mm SHALL CONSIST OF 225mm OF GRANULAR SUB-BASE WITH A 75mm GRANULAR SUB-BASE CAP.
3. CRC REINFORCEMENT CHART ON STANDARD 421001 SHALL BE MODIFIED AS FOLLOWS:

PAVEMENT WIDTH	A	B	C	D
3.6M	26 SPACES (27 BARS) AT 132mm	90mm	75mm	660mm
4.2M	31 SPACES (32 BARS) AT 130mm	90mm	75mm	660mm
4.9M	35 SPACES (36 BARS) AT 135mm	95mm	85mm	660mm

THE REINFORCEMENT SHALL BE 115mm FROM THE TOP OF PAVEMENT

4. TIE BARS IN PAVEMENT OR BETWEEN PAVEMENT AND OTHER NEW/OR EXISTING PCC APPURTENANCES WILL NOT BE PAID FOR IN ACCORDANCE WITH ARTICLE 508.07 OF THE STANDARD SPECIFICATIONS.
5. FOR LONGITUDINAL JOINT DETAILS SEE PAVEMENT ELEVATION AND JOINTING PLANS AND CONCRETE BARRIER DETAILS SHEET.
6. EARTHWORK CALCULATED USING EXISTING I-80/94 PAVEMENT SECTION OF 150mm BITUMINOUS OVERLAY AND 275mm PCC BASE COURSE

EXISTING LEGEND

- (A) PAVEMENT REMOVAL/BREAKING
- (B) PAVED SHOULDER REMOVAL
- (C) CONCRETE BARRIER REMOVAL
- (D) EXISTING PAVEMENT (SEE NOTES FOR THICKNESS)
- (E) EXISTING SHOULDER
- (F) EXISTING CONCRETE BARRIER
- (G) EXISTING GUARD RAIL
- (H) CURB AND GUTTER REMOVAL
- (I) EXISTING SIDEWALK
- (J) SIDEWALK REMOVAL
- (K) REM AND DISP UNS MATL 300

PROPOSED LEGEND

STRUCTURAL

- (1) CONTINUOUSLY REINFORCED PORTLAND CEMENT CONCRETE PAVEMENT 360mm □□
- (2) STABILIZED SUB-BASE 150mm □□
- (3) TOPSOIL FURNISH AND PLACE, 150mm
- (4) SEEDING, CLASS 2A
- (5) CONCRETE MEDIAN SURFACE, 150mm (SPECIAL)
- (6) SAND BACKFILL
- (7) EMBANKMENT □□
- (8) PCC SHOULDERS, 360mm □□
- (9) CONCRETE BARRIER, DOUBLE FACE, 1065mm HEIGHT
- (10) CONCRETE BARRIER, SINGLE FACE, 815mm HEIGHT
- (11) CONCRETE BARRIER, DOUBLE FACE 815mm HEIGHT
- (12) PCC SIDEWALK, 125mm
- (13) SLOTTED DRAIN REMOVAL
- (14) COMB CC&G TB 15.60
- (15) COMB CC&G TB 15.30
- (16) CONCRETE BARRIER BASE
- (17) PIPE UNDERDRAINS 150mm
- (18) GEOTECHNICAL FABRIC FOR GROUND STABILIZATION
- (19) TEMPORARY SHEET PILING REMOVAL
- (20) PCC PVT 250 JOINTED
- (21) BIT C PVT FD SUP 230
- (22) BIT C PVT FD SUP 300
- (23) BC SC SUPER "C" N50 50
- (24) AGGREGATE SUBGRADE 300mm
- (25) SODDING, SALT TOLERANT
- (26) TOPSOIL FURNISH AND PLACE, 300mm
- (27) COMPOST FURNISH AND PLACE, 100mm
- (28) EROSION CONTROL BLANKET
- (29) SUB-BASE GRANULAR MATERIAL, TYPE B, 300mm □□
- (30) AGGREGATE BASE COURSE, TYPE B, 150mm
- (31) SHOULDER RUMBLE STRIP
- (32) CONCRETE BARRIER SINGLE FACE 815 MM HEIGHT, REINFORCED
- (33) SUB GRAN MAT B 100
- (34) BIT SHLD SUPER 150

□□ ITEM TO BE CONSTRUCTED TO EXTENDED LIFE CONCRETE PAVEMENT SPECIFICATIONS

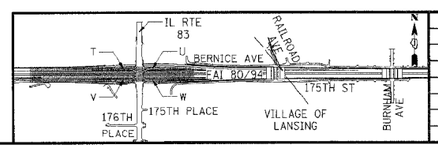

REVISIONS	
NAME	DATE
1 RJS	01/04/06

ILLINOIS DEPARTMENT OF TRANSPORTATION
F.A.I. ROUTE 80/94 (KINGERY EXPRESSWAY)
EB & WB INSIDE LANES (MAINLINE) CONSTRUCTION
COOK COUNTY

TYPICAL SECTIONS
FAI 80/94
STA. 4+500 TO STA. 5+502

SCALE: NONE
DATE: 1/4/06

DRAWN BY: RJS
CHECKED BY: DH

TENG

TENG & ASSOCIATES, INC.
ENGINEERS/ARCHITECTS/PLANNERS
CHICAGO, ILLINOIS

..\A09900ZA.DGN,..\PB99002A.DGN,..\TS1R02A.DGN,..\TS1R02A.DGN,..\TS1A602A.DGN,..\XWT0032A.DGN,..\TS3G032A.DGN,..\VPB99002A.DGN,..\VPB99002A.DGN,..\VPB99002

F.A.I. RTE.	SECTION	COUNTY	TOTAL SHEETS	SHEET NO.
80/94	*	COOK	631	14
STA.		TO STA.		
FED. ROAD DIST. NO.		ILLINOIS	FED. AID PROJECT	

* (2425 & 2626) R-2 CONTRACT NO. 62111

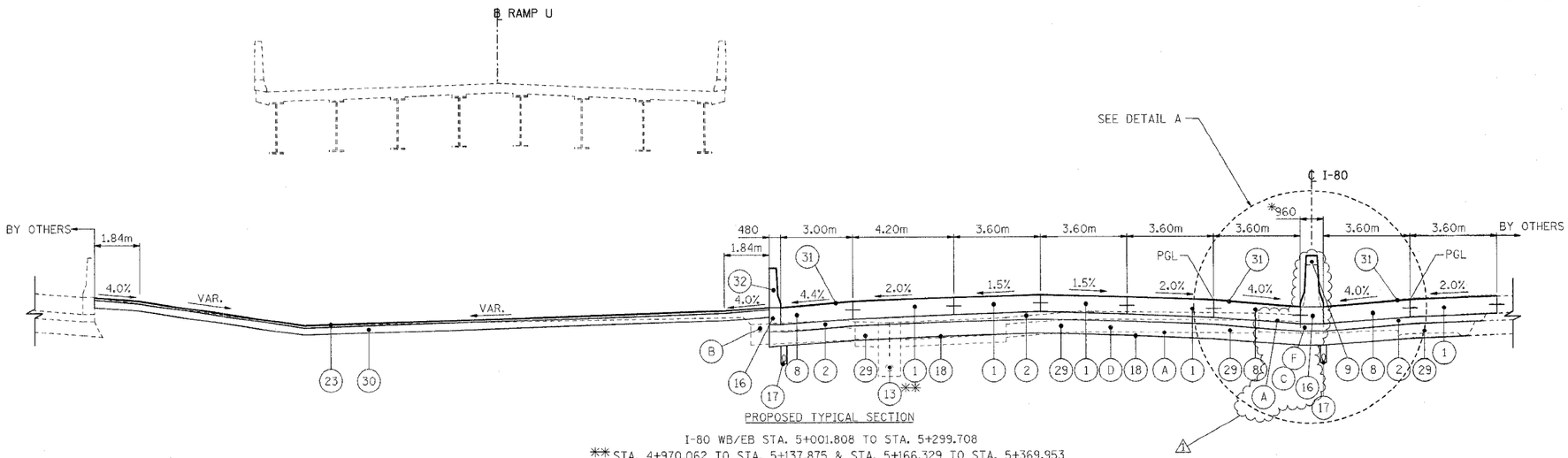

PROPOSED TYPICAL SECTION

I-80 WB/EB STA. 5+001.808 TO STA. 5+299.708

** STA. 4+970.062 TO STA. 5+137.875 & STA. 5+166.329 TO STA. 5+369.953

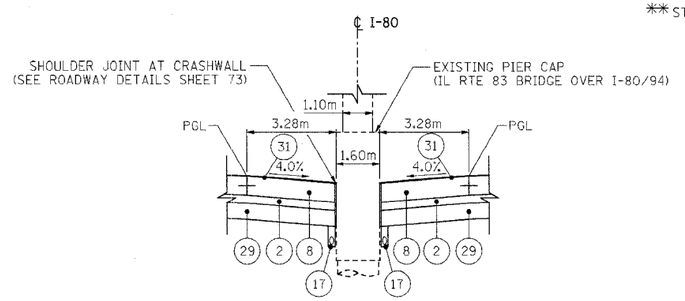

DETAIL A

STA. 5+127.133 TO STA. 5+174.383

* WIDTH VARIES 960mm TO 1.60 m
STA. 5+111.330 TO STA. 5+127.133

WIDTH VARIES 1.60m TO 960mm
STA. 5+174.383 TO STA. 5+180.783

SEE SHEETS 41 AND 42
FOR DETAILS

NOTES

1. ALL UNITS ARE IN MILLIMETERS UNLESS OTHERWISE NOTED.
2. SUB-BASE GRANULAR MATERIAL, TYPE B, 300mm SHALL CONSIST OF 225mm OF GRANULAR SUB-BASE WITH A 75mm GRANULAR SUB-BASE CAP.
3. CRC REINFORCEMENT CHART ON STANDARD 421001 SHALL BE MODIFIED AS FOLLOWS:

PAVEMENT WIDTH	A	B	C	D
3.6M	26 SPACES (27 BARS) AT 132mm	90mm	75mm	660mm
4.2M	31 SPACES (32 BARS) AT 130mm	90mm	75mm	660mm
4.9M	35 SPACES (36 BARS) AT 135mm	95mm	85mm	660mm

THE REINFORCEMENT SHALL BE 115mm FROM THE TOP OF PAVEMENT

4. TIE BARS IN PAVEMENT OR BETWEEN PAVEMENT AND OTHER NEW/OR EXISTING PCC APPURTENANCES WILL NOT BE PAID FOR IN ACCORDANCE WITH ARTICLE 508.07 OF THE STANDARD SPECIFICATIONS.
5. FOR LONGITUDINAL JOINT DETAILS SEE PAVEMENT ELEVATION AND JOINTING PLANS AND CONCRETE BARRIER DETAILS SHEET.
6. EARTHWORK CALCULATED USING EXISTING I-80/94 PAVEMENT SECTION OF 150mm BITUMINOUS OVERLAY AND 275mm PCC BASE COURSE

EXISTING LEGEND

- (A) PAVEMENT REMOVAL/BREAKING
- (B) PAVED SHOULDER REMOVAL
- (C) CONCRETE BARRIER REMOVAL
- (D) EXISTING PAVEMENT (SEE NOTES FOR THICKNESS)
- (E) EXISTING SHOULDER
- (F) EXISTING CONCRETE BARRIER
- (G) EXISTING GUARD RAIL
- (H) CURB AND GUTTER REMOVAL
- (I) EXISTING SIDEWALK
- (J) SIDEWALK REMOVAL
- (K) REM AND DISP UNS MATL 300

PROPOSED LEGEND

STRUCTURAL

□□ ITEM TO BE CONSTRUCTED TO EXTENDED LIFE CONCRETE PAVEMENT SPECIFICATIONS

- (1) CONTINUOUSLY REINFORCED PORTLAND CEMENT CONCRETE PAVEMENT 360mm □□
- (2) STABILIZED SUB-BASE 150mm □□
- (3) TOPSOIL FURNISH AND PLACE, 150mm
- (4) SEEDING, CLASS 2A
- (5) CONCRETE MEDIAN SURFACE, 150mm (SPECIAL)
- (6) SAND BACKFILL
- (7) EMBANKMENT □□
- (8) PCC SHOULDERS, 360mm □□
- (9) CONCRETE BARRIER, DOUBLE FACE, 1065mm HEIGHT
- (10) CONCRETE BARRIER, SINGLE FACE, 815mm HEIGHT
- (11) CONCRETE BARRIER, DOUBLE FACE 815mm HEIGHT
- (12) PCC SIDEWALK, 125mm
- (13) SLOTTED DRAIN REMOVAL
- (14) COMB CC&G TB 15.60
- (15) COMB CC&G TB 15.30
- (16) CONCRETE BARRIER BASE
- (17) PIPE UNDERDRAINS 150mm
- (18) GEOTECHNICAL FABRIC FOR GROUND STABILIZATION
- (19) TEMPORARY SHEET PILING REMOVAL
- (20) PCC PVT 250 JOINTED
- (21) BIT C PVT FD SUP 230
- (22) BIT C PVT FD SUP 300
- (23) BC SC SUPER "C" N50 50
- (24) AGGREGATE SUBGRADE 300mm
- (25) SODDING, SALT TOLERANT
- (26) TOPSOIL FURNISH AND PLACE, 300mm
- (27) COMPOST FURNISH AND PLACE, 100mm
- (28) EROSION CONTROL BLANKET
- (29) SUB-BASE GRANULAR MATERIAL, TYPE B, 300mm □□
- (30) AGGREGATE BASE COURSE, TYPE B, 150mm
- (31) SHOULDER RUMBLE STRIP
- (32) CONCRETE BARRIER SINGLE FACE 815 MM HEIGHT, REINFORCED
- (33) SUB GRAN MAT B 100
- (34) BIT SHLD SUPER 150

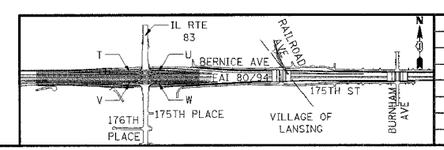

REVISIONS	
NAME	DATE
1 RJS	01/04/06

ILLINOIS DEPARTMENT OF TRANSPORTATION
F.A.I. ROUTE 80/94 (KINGERY EXPRESSWAY)
EB & WB INSIDE LANES (MAINLINE) CONSTRUCTION
COOK COUNTY

TYPICAL SECTIONS
FAI 80/94
STA. 5+002 TO STA. 5+300

SCALE: NONE
DATE: 1/4/06

DRAWN BY: RJS
CHECKED BY: DH

TENG
TENG & ASSOCIATES, INC.
ENGINEERS/ARCHITECTS/PLANNERS
CHICAGO, ILLINOIS

..\AB99002A.DGN,..\P99900I2A.DGN,..\TSTR01A.DGN,..\TSTR02A.DGN,..\TSIR602A.DGN,..\VW17003A.DGN,..\TSI30032A.DGN,..\PRIA002A.DGN,..\TSIT0012A.DGN,..\HRIT0032A.DGN,..\TSIT0012A.DGN
12-28-2005,15:59:07 I:\DOCUMENT\993750\CIVIL\DGN\TSIT0052A.DGN
1 2 3 4 5 6 7 8 9 10 11 12 13 14 15 16 17 18 19 20 21 22 23 24 25 26 27 28 29 30 31 32 33 34 35 36 37 38 39 40 41 42 43 44 45 46 47 48 49 50 51 52 53 54 55 56 57 58 59 60 61 62
VARSHNKZ

F.A.I. RTE.	SECTION	COUNTY	TOTAL SHEETS	SHEET NO.
80/94	*	COOK	631	15
STA.		TO STA.		
FED. ROAD DIST. NO.		ILLINOIS	FED. AID PROJECT	

* (2425 & 2626) R-2 CONTRACT NO. 62111

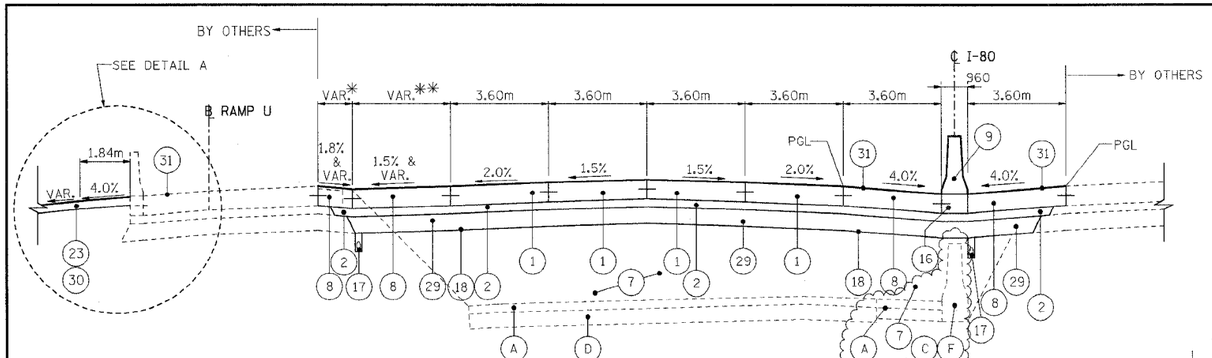

PROPOSED TYPICAL SECTION

I-80 WB/EB STA. 5+502.007 TO STA. 5+624.413

* WIDTH VARIES FROM 3.00m TO 0.00m

** WIDTH VARIES FROM 3.60m TO 1.94m

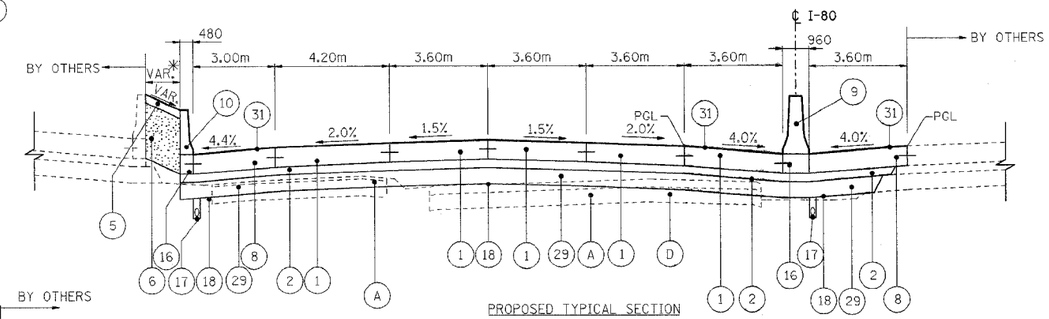

PROPOSED TYPICAL SECTION

I-80 WB/EB STA. 5+738.995 TO STA. 5+815.000

* WIDTH VARIES FROM 2.10m TO 0.56m

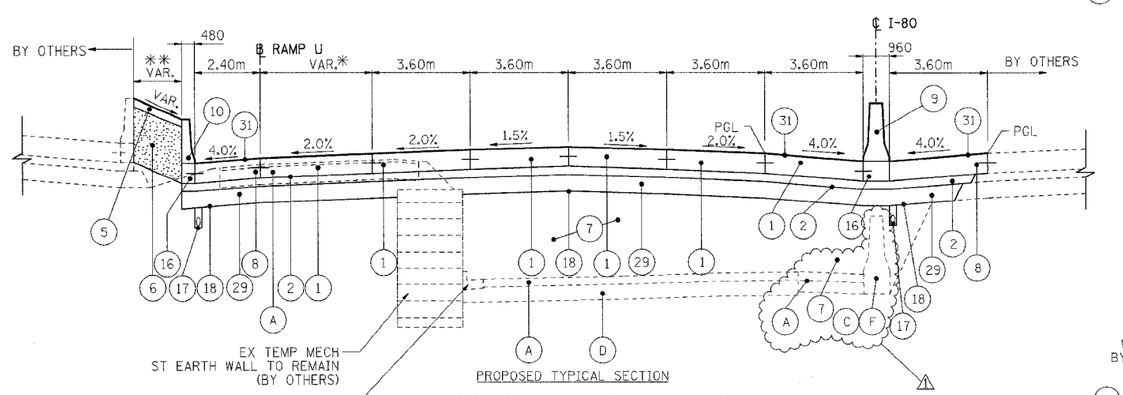

PROPOSED TYPICAL SECTION

I-80 WB/EB STA. 5+624.413 TO STA. 5+738.995

* WIDTH VARIES FROM 6.88m TO 0.60m

** WIDTH VARIES FROM 1.74m TO 2.44m

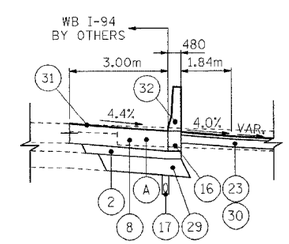

DETAIL A

STA. 5+502+007 TO STA. 5+537.532

(I-94 WB STA. 32+860.000 TO STA. 32+937.000)

EXISTING LEGEND

- (A) PAVEMENT REMOVAL/BREAKING
- (B) PAVED SHOULDER REMOVAL
- (C) CONCRETE BARRIER REMOVAL
- (D) EXISTING PAVEMENT (SEE NOTES FOR THICKNESS)
- (E) EXISTING SHOULDER
- (F) EXISTING CONCRETE BARRIER
- (G) EXISTING GUARD RAIL
- (H) CURB AND GUTTER REMOVAL
- (I) EXISTING SIDEWALK
- (J) SIDEWALK REMOVAL
- (K) REM AND DISP UNS MATL 300

PROPOSED LEGEND

STRUCTURAL

□□ ITEM TO BE CONSTRUCTED TO EXTENDED LIFE CONCRETE PAVEMENT SPECIFICATIONS

- (1) CONTINUOUSLY REINFORCED PORTLAND CEMENT CONCRETE PAVEMENT 360mm □□
- (2) STABILIZED SUB-BASE 150mm □□
- (3) TOPSOIL FURNISH AND PLACE, 150mm
- (4) SEEDING, CLASS 2A
- (5) CONCRETE MEDIAN SURFACE, 150mm (SPECIAL)
- (6) SAND BACKFILL
- (7) EMBANKMENT □□
- (8) PCC SHOULDERS, 360mm □□
- (9) CONCRETE BARRIER, DOUBLE FACE, 1065mm HEIGHT
- (10) CONCRETE BARRIER, SINGLE FACE, 815mm HEIGHT
- (11) CONCRETE BARRIER, DOUBLE FACE 815mm HEIGHT
- (12) PCC SIDEWALK, 125mm
- (13) SLOTTED DRAIN REMOVAL
- (14) COMB CC&G TB 15.60
- (15) COMB CC&G TB 15.30
- (16) CONCRETE BARRIER BASE
- (17) PIPE UNDERDRAINS 150mm
- (18) GEOTECHNICAL FABRIC FOR GROUND STABILIZATION
- (19) TEMPORARY SHEET PILING REMOVAL
- (20) PCC PVT 250 JOINTED
- (21) BIT C PVT FD SUP 230
- (22) BIT C PVT FD SUP 300
- (23) BC SC SUPER "C" N50 50
- (24) AGGREGATE SUBGRADE 300mm
- (25) SODDING, SALT TOLERANT
- (26) TOPSOIL FURNISH AND PLACE, 300mm
- (27) COMPOST FURNISH AND PLACE, 100mm
- (28) EROSION CONTROL BLANKET
- (29) SUB-BASE GRANULAR MATERIAL, TYPE B, 300mm □□
- (30) AGGREGATE BASE COURSE, TYPE B, 150mm
- (31) SHOULDER RUMBLE STRIP
- (32) CONCRETE BARRIER SINGLE FACE 815 MM HEIGHT, REINFORCED
- (33) SUB GRAN MAT B 100
- (34) BIT SHLD SUPER 150

NOTES

1. ALL UNITS ARE IN MILLIMETERS UNLESS OTHERWISE NOTED.
2. SUB-BASE GRANULAR MATERIAL, TYPE B, 300mm SHALL CONSIST OF 225mm OF GRANULAR SUB-BASE WITH A 75mm GRANULAR SUB-BASE CAP.
3. CRC REINFORCEMENT CHART ON STANDARD 421001 SHALL BE MODIFIED AS FOLLOWS:

PAVEMENT WIDTH	A	B	C	D
3.6M	26 SPACES (27 BARS) AT 132mm	90mm	75mm	660mm
4.2M	31 SPACES (32 BARS) AT 130mm	90mm	75mm	660mm
4.9M	35 SPACES (36 BARS) AT 135mm	95mm	85mm	660mm

THE REINFORCEMENT SHALL BE 115mm FROM THE TOP OF PAVEMENT

4. TIE BARS IN PAVEMENT OR BETWEEN PAVEMENT AND OTHER NEW/OR EXISTING PCC APPURTENANCES WILL NOT BE PAID FOR IN ACCORDANCE WITH ARTICLE 508.07 OF THE STANDARD SPECIFICATIONS.
5. FOR LONGITUDINAL JOINT DETAILS SEE PAVEMENT ELEVATION AND JOINTING PLANS AND CONCRETE BARRIER DETAILS SHEET.
6. EARTHWORK CALCULATED USING EXISTING I-80/94 PAVEMENT SECTION OF 150mm BITUMINOUS OVERLAY AND 275mm PCC BASE COURSE

REVISIONS	
NAME	DATE
RJS	01/04/06

ILLINOIS DEPARTMENT OF TRANSPORTATION
F.A.I. ROUTE 80/94 (KINGERY EXPRESSWAY)
EB & WB INSIDE LANES (MAINLINE) CONSTRUCTION
COOK COUNTY

TYPICAL SECTIONS
FAI 80/94
STA. 5+502 TO STA. 5+815

SCALE: NONE
DATE: 1/4/06
DRAWN BY: RJS
CHECKED BY: DH

TENG
TENG & ASSOCIATES, INC.
ENGINEERS/ARCHITECTS/PLANNERS
CHICAGO, ILLINOIS

..\A199G02A.DGN, ..\PB99G02A.DGN, ..\TS7R02A.DGN, ..\TS7T02A.DGN, ..\TS7T03G2A.DGN, ..\WT7G02A.DGN, ..\WT7T02A.DGN, ..\FR7T002A.DGN, ..\FR7T003A.DGN, ..\FR7T004A.DGN, ..\FR7T005A.DGN, ..\FR7T006A.DGN, ..\FR7T007A.DGN, ..\FR7T008A.DGN, ..\FR7T009A.DGN, ..\FR7T010A.DGN, ..\FR7T011A.DGN, ..\FR7T012A.DGN, ..\FR7T013A.DGN, ..\FR7T014A.DGN, ..\FR7T015A.DGN, ..\FR7T016A.DGN, ..\FR7T017A.DGN, ..\FR7T018A.DGN, ..\FR7T019A.DGN, ..\FR7T020A.DGN
02-26-2005, 9:59:06 T:\DOCUMENT\95175\CIVIL\DGN\TS7T002A.DGN JAKSHWZ
1 2 3 4 5 6 7 8 9 10 11 12 13 14 15 16 17 18 19 20 21 22 23 24 25 26 27 28 29 30 31 32 33 34 35 36 37 38 39 40 41 42 43 44 45 46 47 48 49 50 51 52 53 54 55 56 57 58 59 60 61 62

F.A.I. RTE.	SECTION	COUNTY	TOTAL SHEETS	SHEET NO.
80/94	*	COOK	631	22
STA.		TO STA.		
FED. ROAD DIST. NO.		ILLINOIS	FED. AID PROJECT	

* (2425 & 2626) R-2 CONTRACT NO. 62111

SCHEDULE OF QUANTITIES

INLET FILTERS — TOTAL 146 EACH

LOCATION	STATION	OFFSET LT/RT	EACH
	REFER TO DRAINAGE SCHEDULE		71
	REFER TO DRAINAGE SCHEDULE		14
	REFER TO DRAINAGE SCHEDULE		42
BURNHAM AVE	59+957.23	22.52 LT	1
BURNHAM AVE	60+000.07	8.71 LT	2
BURNHAM AVE	60+000.08	6.32 RT	2
I-80	4+501.00	0.00	2
I-80 EB	6+319.55	26.53 RT	1
I-80 EB	6+354.22	28.43 RT	1
I-80 EB	6+422.33	28.57 RT	1
I-80 EB	6+432.27	28.43 RT	1
I-80 EB	6+437.22	26.52 RT	1
I-80 EB	6+443.80	28.43 RT	1
I-80 EB	6+488.37	28.42 RT	1
I-80 EB	6+517.30	26.50 RT	1
I-80 EB	6+557.43	26.34 RT	1
I-80 EB	6+563.37	28.42 RT	1
I-80 EB	6+610.35	28.37 RT	1
I-80 EB	6+653.45	26.65 RT	1

CATCH BASINS TO BE ADJUSTED — TOTAL 45 EACH

LOCATION	STATION	OFFSET	LT/RT	EACH
I-80/94 WB	4+950.00	38.39	LT	1
I-80/94 WB	4+962.00	44.10	LT	1
I-80/94 WB	4+999.99	-38.75	LT	1
I-80/94 WB	5+004.44	-26.02	LT	1
I-80/94 WB	5+020.99	-26.14	LT	1
I-80/94 WB	5+048.61	-34.89	LT	1
I-80/94 WB	5+075.58	-34.55	LT	1
I-80/94 WB	5+075.04	-41.58	LT	1
I-80/94 WB	5+097.11	-25.47	LT	1
I-80/94 WB	5+097.27	-43.15	LT	1
I-80/94 WB	5+127.36	-45.28	LT	1
I-80/94 WB	5+170.45	-46.18	LT	1
I-80/94 WB	5+218.50	-47.46	LT	1
I-80/94 WB	5+225.52	-40.39	LT	1
I-80/94 WB	5+205.54	-23.64	LT	1
I-80/94 WB	5+225.63	-25.81	LT	1
I-80/94 WB	5+249.17	-25.65	LT	1
I-80/94 WB	5+276.44	-25.41	LT	1
I-80/94 WB	5+297.51	-27.39	LT	1
I-80/94 WB	5+297.53	-37.58	LT	1
I-80/94 WB	5+299.97	-45.58	LT	1
I-80/94 WB	5+375.00	-46.83	LT	1
I-80/94 WB	5+176.517	1.36	RT	1
I-80/94 WB	5+449.219	-36.56	LT	1
I-80/94 WB	5+494.4	-34.60	LT	1
I-80/94 WB	5+686.449	-24.35	LT	1
I-80/94 WB	5+761.188	-22.08	LT	1
I-80/94 WB	5+836.588	-21.48	LT	1
RR	300+017.400	-17.48	LT	1
RR	300+021.564	27.97	RT	1
RR	300+098.101	-25.19	LT	1
RR	300+098.946	-16.51	LT	1
I-80/94 WB	6+125.078	-22.56	LT	1
I-80/94 WB	6+173.890	-21.96	LT	1
I-80/94 WB	6+319.906	-19.92	LT	1
I-80/94 WB	6+354.219	28.43	RT	1
I-80/94 WB	6+378.903	-19.53	LT	1
I-80/94 WB	6+422.297	28.43	RT	1
I-80/94 WB	6+432.272	28.43	RT	1
I-80/94 WB	6+437.838	-19.19	LT	1
I-80/94 WB	6+443.805	28.43	RT	1
I-80/94 WB	6+488.375	28.43	RT	1
I-80/94 WB	6+563.375	28.43	RT	1
I-80/94 WB	6+610.219	28.43	RT	1
I-80/94 WB	6+681.218	28.43	RT	1

HANDHOLE — TOTAL 1 EACH

STATION	EACH
60+075.000	1

MANHOLES TO BE ADJUSTED — TOTAL 11 EACH

LOCATION	STATION	OFFSET	LT/RT	EACH
RR	300+010.245	24.74	RT	1
RR	300+105.759	38.75	LT	1
I-80/94 EW	6+319.554	26.53	RT	1
I-80/94 EW	6+437.223	26.53	RT	1
I-80/94 EW	6+653.452	26.65	RT	1
175TH ST	320+086.442	4.51	LT	1
175TH ST	320+049.885	2.57	RT	1
175TH ST	320+098.999	1.80	RT	1
175TH ST	320+100.908	0.77	RT	1
175TH ST	320+101.113	5.70	LT	1
175TH ST	320+106.487	2.27	RT	1

MANHOLES TO BE RECONSTRUCTED — TOTAL 5 EACH

Sheet				EACH
175TH ST	319+977.522	4.85	LT	1
175TH ST	319+989.801	4.85	LT	1
BERNICE AVE	309+990.261	5.72	RT	1
BURNHAM	59+952.376	9.94	LT	1
BURNHAM	59+964.014	6.66	LT	1

FRAMES AND GRATES TO BE ADJUSTED — TOTAL 1 EACH

LOCATION	STATION	OFFSET	LT/RT	EACH
BERNICE AVE	300+107.119	4.36	LT	1

REMOVING MANHOLES — TOTAL 68 EACH

LOCATION	STATION	OFFSET	LT/RT	EACH
I-80/94 WB	4+562.662	19.57	LT	1
I-80/94 WB	4+696.956	19.67	LT	1
I-80/94 WB	5+138.908	15.99	LT	1
I-80/94 WB	5+165.831	16.12	LT	1
I-80/94 WB	5+178.565	19.23	LT	1
I-80/94 WB	5+233.484	16.68	LT	1
I-80/94 WB	5+299.702	16.89	LT	1
I-80/94 WB	5+433.458	16.89	LT	1
I-80/94 EB	5+801.834	0.96	RT	1
I-80/94 EB	5+847.999	0.92	RT	1
I-80/94 EB	5+894.213	0.88	RT	1
I-80/94 EB	5+940.103	0.92	RT	1
I-80/94 EB	6+191.883	0.75	RT	1
I-80/94 EB	6+237.053	0.64	RT	1
I-80/94 EB	6+282.389	1.44	RT	1
I-80/94 EB	6+326.431	1.37	RT	1
I-80/94 EB	6+373.179	0.48	RT	1
I-80/94 EB	6+419.651	1.19	RT	1
I-80/94 EB	6+466.513	0.37	RT	1
I-80/94 EB	6+511.347	0.49	RT	1
I-80/94 EB	6+523.853	0.52	RT	1
I-80/94 EB	6+557.935	0.54	RT	1
I-80/94 EB	6+602.382	0.42	RT	1
I-80/94 EB	6+649.320	0.36	RT	1
I-80/94 EB	6+694.797	0.46	RT	1
BERNICE AVE	309+873.576	10.04	LT	1
BERNICE AVE	309+986.704	11.81	LT	1
BERNICE AVE	310+013.100	10.44	LT	1
175TH ST	319+947.438	9.21	RT	1
BURNHAM AVE	60+105.967	14.10	RT	1
BURNHAM AVE	60+105.702	13.76	LT	1
BURNHAM AVE	60+041.305	23.14	LT	1
BURNHAM AVE	60+041.402	22.74	RT	1
BURNHAM AVE	60+000.001	8.72	LT	1
BURNHAM AVE	60+000.000	6.30	RT	1
BURNHAM AVE	59+957.201	22.58	RT	1
BURNHAM AVE	59+924.720	11.30	LT	1
BURNHAM AVE	59+923.718	10.66	RT	1
BURNHAM AVE	59+864.124	11.24	LT	1
BURNHAM AVE	59+862.571	8.25	RT	1
I-80/94 MED.	4+605.386	0.65	LT	1
I-80/94 MED.	4+656.964	0.54	LT	1
I-80/94 MED.	4+699.461	0.22	LT	1
I-80/94 MED.	4+718.199	0.25	LT	1
I-80/94 MED.	4+743.428	0.12	LT	1
I-80/94 MED.	4+789.928	0.24	RT	1
I-80/94 MED.	4+836.992	0.44	RT	1
I-80/94 MED.	4+896.463	0.68	RT	1
I-80/94 MED.	4+947.415	0.48	RT	1
I-80/94 MED.	4+990.402	0.91	RT	1
I-80/94 MED.	5+038.645	1.00	RT	1
I-80/94 MED.	5+098.734	1.19	RT	1
I-80/94 MED.	5+165.690	1.01	RT	1
I-80/94 MED.	5+183.804	1.06	RT	1
I-80/94 MED.	5+219.542	0.97	RT	1
I-80/94 MED.	5+261.036	1.06	RT	1
I-80/94 MED.	5+307.191	0.92	RT	1
I-80/94 MED.	5+381.925	0.84	RT	1
I-80/94 MED.	5+436.320	1.06	RT	1
I-80/94 MED.	5+442.757	1.00	RT	1
I-80/94 MED.	5+489.532	2.15	RT	1
I-80/94 MED.	5+534.202	0.37	RT	1
I-80/94 MED.	5+556.348	0.85	RT	1
I-80/94 MED.	5+573.067	0.93	RT	1
I-80/94 MED.	5+619.570	0.90	RT	1
I-80/94 MED.	5+665.820	0.87	RT	1
I-80/94 MED.	5+709.190	0.92	RT	1
I-80/94 MED.	5+755.918	0.84	RT	1

DRAINAGE STRUCTURES TO BE ADJUSTED — TOTAL 27 EACH

LOCATION				EACH
I-80/94 WB	4+500.999	0.00		1
I-80/94 WB	4+553.263	22.61	LT	1
I-80/94	4+562.800	0.00		1
I-80/94 WB	4+585.880	0.00		1
I-80/94 WB	4+627.898	22.55	LT	1
I-80/94	4+660.880	0.00		1
I-80/94 WB	4+704.329	22.57	LT	1
I-80/94	4+735.880	0.00		1
I-80/94 WB	4+765.198	22.61	LT	1
I-80/94 EB	4+849.964	0.06	RT	1
I-80/94	4+886.000	0.00		1
I-80/94	4+961.000	0.00		1
I-80/94	5+035.999	0.00		1
I-80/94	5+110.999	0.00		1
I-80/94	5+183.008	0.00		1
I-80/94	5+235.355	0.00		1
I-80/94	5+310.356	0.00		1
I-80/94	5+385.356	0.00		1
I-80/94	5+460.356	0.00		1
I-80/94	5+535.356	0.00		1
I-80/94	5+610.356	0.00		1
I-80/94	5+685.357	0.00		1
I-80/94	5+760.357	0.00		1
I-80/94 WB	5+910.381	22.56	LT	1
I-80/94 WB	5+985.331	22.56	LT	1
I-80/94 EB	6+517.302	26.50	RT	1
I-80/94 EB	6+557.359	26.48	RT	1

REMOVING INLETS — TOTAL 18 EACH

LOCATION	STATION	OFFSET	LT/RT	EACH
I-80/94 WB	4+622.213	17.33	LT	1
I-80/94 WB	4+702.001	17.50	LT	1
I-80/94 WB	4+934.362	19.02	LT	1
I-80/94 WB	4+829.151	18.81	LT	1
I-80/94 WB	5+301.50	23.00	LT	1
I-80/94 WB	5+433.56	24.75	LT	1
I-80/94 WB	5+760.327	12.42	LT	1
I-80/94 EB	6+804.820	16.97	RT	1
BERNICE AVE	309+946.393	9.03	RT	1
BURNHAM AVE	60+074.938	8.13	RT	1
BURNHAM AVE	60+075.145	8.08	LT	1
BURNHAM AVE	59+923.846	8.15	LT	1
BURNHAM AVE	59+922.817	8.26	RT	1
BURNHAM AVE	59+863.023	8.49	LT	1
175th STREET	320+096.195	5.56	RT	1
175th STREET	320+105.764	5.57	RT	1
175th STREET	320+105.338	4.60	LT	1
175th STREET	320+097.220	3.24	LT	1

SEDIMENT CONTROL, SILT FENCE — TOTAL 612 METER

LOCATION	FROM STATION	OFFSET	TO STATION	OFFSET	METER
Railroad Ave	5+960.07	43.05 LT	6+022.49	43.26 LT	62.40
Railroad Ave	6+027.50	43.05 LT	6+027.50	43.05 LT	38.40
Railroad Ave	5+981.48	35.95 RT	6+023.44	35.38 RT	42.00
Railroad Ave	6+028.44	35.31 RT	6+068.01	34.76 RT	39.50
I-80 WB	6+127.61	20.29 LT	6+392.36	16.22 LT	265.00
BURNHAM AVE	59+943.96	16.12 LT	59+954.98	16.07 LT	11.00
BURNHAM AVE	60+043.06	19.32 LT	60+052.11	19.28 LT	9.05
BURNHAM AVE	59+965.15	31.12 RT	59+970.59	12.50 RT	20.50
BERNICE AVE	309+938.98	6.40 RT	309+990.86	20.84 RT	60.50
BERNICE AVE	310+010.22	20.62 RT	310+064.06	6.03 RT	63.20

LUG SYSTEM COMPLETE 15.0 METER — TOTAL 1 EACH

LOCATION	FROM STATION	TO STATION	OFFSET	EACH
WB I 80/94	5+943.30	5+959.50	LT	1

TREE REMOVAL (OVER 15 UNITS DIAMETER) — TOTAL 289 UNIT

LOCATION	STATION	OFFSET	UNIT
BURNHAM	59+882.600	11.39m RT	28.00
BURNHAM	59+890.440	11.43m RT	27.00
BURNHAM	59+904.522	10.89m RT	25.00
BURNHAM	59+928.200	11.38m RT	24.00
BURNHAM	59+896.800	11.97m LT	25.00
BURNHAM	59+919.800	12.28m LT	20.00
BURNHAM	60+060.480	11.94m LT	24.00
BURNHAM	60+074.000	10.97m LT	34.00
BURNHAM	60+053.530	11.31m RT	18.00
BURNHAM	60+060.297	11.5m RT	24.00
BURNHAM	60+071.881	11.17m RT	18.00
BURNHAM	60+087.800	10.8m RT	22.00

APPROACH SLAB REMOVAL — TOTAL 1580 SQ M

LOCATION	FROM STATION	TO STATION	AVG WIDTH	SQ M
Burnham Ave Bridge				
I80	6+738.635	6+744.731	35.20	214.58
I80	6+798.651	6+804.746	35.20	214.54
Railroad Ave Bridge				
I80	5+987.441	6+006.042	31.60	541.03
I80	6+142.659	6+161.260	33.95	610.24

TREE REMOVAL (6 TO 15 UNITS DIAMETER) — TOTAL 80 UNIT

LOCATION	STATION	OFFSET	UNIT
175TH STREET	320+042.800	6.77m RT	12.00
175TH STREET	320+085.970	5.78m RT	15.00
BURNHAM	59+937.150	11.34m RT	9.00
BURNHAM	59+942.521	11.92m LT	24.00
BURNHAM	60+078.130	11.02m RT	12.00
BURNHAM	60+084.600	10.72m RT	8.00

REVISIONS	
NAME	DATE
1 KV	1/4/06

ILLINOIS DEPARTMENT OF TRANSPORTATION
F.A.I. ROUTE 80/94 (KINGERY EXPRESSWAY)
EB & WB INSIDE LANES (MAINLINE) CONSTRUCTION
COOK COUNTY

SCHEDULE OF QUANTITIES
I

SCALE: NONE
DATE: 1/4/06

DRAWN BY: RJS
CHECKED BY: DDH

TENG
TENG & ASSOCIATES, INC.
ENGINEERS/ARCHITECTS/PLANNERS
CHICAGO, ILLINOIS

VARSHNKZ
..\SCITR022A.DGN, ..\A8990012A.DGN
12-30-2005, 10:57:12 T:\DOCUMENT\93175011\CIVIL\DGN\SCITR022A.DGN

F.A.I. RTE.	SECTION	COUNTY	TOTAL SHEETS	SHEET NO.
80/94	*	COOK	631	25
STA.		TO STA.		
FED. ROAD DIST. NO.		ILLINOIS	FED. AID PROJECT	

* (2425 & 2626) R-2 CONTRACT NO. 62111

SCHEDULE OF QUANTITIES

SIDEWALK REMOVAL — TOTAL 757 SQ M

LOCATION	FROM STATION	TO STATION	OFFSET	AVG WIDTH	SQ M
175TH ST	319+945.721	319+984.883	RT	1.50	58.74
175TH ST	319+985.877	319+989.808	RT	1.50	5.91
175TH ST	320+010.840	320+013.470	RT	1.73	4.54
175TH ST	320+014.927	320+048.858	RT	1.51	51.22
175TH ST	320+053.240	320+096.924	RT	1.50	65.53
175TH ST	320+091.227	320+092.729	RT	4.52	6.79
175TH ST	320+108.996	320+110.498	RT	4.67	7.01
175TH ST	320+105.087	320+115.000	RT	1.50	14.87
BURNHAM	59+943.385	59+953.815	LT	1.00	10.43
BURNHAM	59+944.157	59+953.449	RT	1.46	13.52
BURNHAM	59+967.441	60+029.588	LT	1.41	87.32
BURNHAM	59+967.685	60+031.151	RT	1.22	77.43
BURNHAM	60+044.615	60+049.857	LT	1.03	5.37
BURNHAM	60+049.857	60+051.653	LT	2.73	4.90
BURNHAM	60+051.653	60+055.686	LT	1.00	4.03
BURNHAM	60+055.686	60+113.114	LT	1.00	57.43
BURNHAM	60+045.460	60+048.077	RT	1.86	4.85
BURNHAM	60+048.077	60+050.160	RT	2.05	4.27
BURNHAM	60+050.160	60+070.155	RT	1.74	34.79
BURNHAM	60+070.155	60+155.000	RT	1.70	144.24
BURNHAM	60+111.423	60+159.601	LT		54.58
BURNHAM	60+153.256	60+154.986	RT	6.03	10.43
BURNHAM	60+154.986	60+159.497	RT	1.70	7.67
BURNHAM	58+855.527	58+856.507	RT	0.98	4.41
BURNHAM	59+886.442	59+886.839	RT	0.40	2.08
BURNHAM	59+901.618	59+902.104	RT	0.49	2.04
BURNHAM	59+917.316	59+917.921	LT	0.61	2.93
BURNHAM	59+940.096	59+940.907	LT	0.81	4.37
BURNHAM	60+063.507	60+064.408	LT	0.90	4.87

CONCRETE BARRIER REMOVAL — TOTAL 1877 METER

LOCATION	FROM STATION	TO STATION	OFFSET	METER
I80	5+370.000	5+517.200	LT	147.2
I80	5+815.000	6+006.800	RT	191.8
I80	6+143.276	6+350.000	RT	206.7
I80	6+406.743	6+409.743	RT	3.0
I80	6+472.182	6+475.182	RT	3.0
I80	6+537.764	6+540.764	RT	3.0
I80	6+604.005	6+744.729	RT	140.7
I80	6+738.651	6+814.721	RT	16.1
I80	4+600.000	4+800.000	CL	200.0
I80	4+800.000	5+126.184	CL	326.2
I80	5+175.995	5+500.000	CL	324.0
I80	5+500.000	5+815.000	CL	315.0

PAVED SHOULDER REMOVAL — TOTAL 7306 SQ M

LOCATION	FROM STATION	TO STATION	OFFSET	AVG WIDTH	SQ M
I80	4+950.000	5+405.000	LT	1.80	818.8
I80	4+950.000	5+405.000	LT	4.31	1960.6
I80	5+815.000	5+987.441	LT	1.94	334.4
I80	5+815.000	5+987.441	RT	1.77	305.1
I80	6+161.260	6+425.000	LT	1.62	428.1
I80	6+161.260	6+170.000	LT	2.02	17.6
I80	6+161.260	6+290.730	LT	2.77	359.1
I80	6+290.730	6+425.000	LT	1.81	243.4
I80	6+161.260	6+425.000	LT	2.13	561.2
I80	6+161.260	6+350.000	RT	1.80	339.4
I80	6+350.000	6+425.000	RT	2.82	211.2
I80	6+161.260	6+372.964	RT	2.58	545.2
I80	6+372.964	6+400.000	RT	2.21	59.7
I80	6+400.000	6+425.000	RT	4.52	113.1
I80	4+950.000	5+150.000	LT	1.99	397.0
I80	5+150.000	5+405.000	LT	1.98	504.9
I80	5+750.000	5+815.000	LT	1.66	107.6

PAVEMENT BREAKING — TOTAL 24822 SQ M

LOCATION	FROM STATION	TO STATION	OFFSET	AVG WIDTH	SQ M
I80	4+500.000	4+572.805	LT	17.92	1304.99
I80	4+572.805	4+800.000	LT	13.78	3130.63
I80	4+800.000	4+848.000	LT	13.65	655.30
I80	4+800.758	4+848.000	LT	5.45	257.68
I80	4+848.000	4+950.000	LT	19.91	2030.31
I80	5+405.000	5+500.000	LT	19.46	1848.70
I80	5+500.000	5+597.451	LT	19.78	1927.58
I80	5+597.451	5+625.000	LT	19.64	540.92
I80	5+625.000	5+750.000	LT	14.69	1835.63
I80	6+425.000	6+738.635	LT	14.88	4666.89
I80	6+425.000	6+730.461	LT	1.54	469.34
I80	6+730.461	6+738.635	LT	2.33	19.02
I80	6+425.000	6+604.000	RT	14.88	2663.52
I80	6+604.000	6+738.635	RT	13.88	1868.73
I80	6+425.000	6+738.635	RT	4.00	1252.97
I80	6+804.746	6+814.721	LT	14.88	148.43
I80	6+804.746	6+814.721	LT	2.36	23.58
I80	6+804.746	6+814.721	RT	14.88	148.43
I80	6+804.746	6+814.721	RT	2.97	29.63

PORTLAND CEMENT CONCRETE SHOULDERS - 360MM — TOTAL 23803 SQ M

LOCATION	FROM STATION	TO STATION	OFFSET	WIDTH 10M)	SQ M
I-80/94 MED	4+500.000	5+989.500	RT	3.60	5362.2
I-80/94 MED	6+062.500	6+730.461	RT	3.60	2404.7
I-80/94 MED	4+500.000	5+989.500	LT	3.60	5362.2
I-80/94 MED	6+062.500	6+730.461	LT	3.60	2404.7
I-80/94 EB OUT	6+062.500	6+159.374	RT	3.00	290.6
I-80/94 EB OUT	6+159.374	6+193.722	RT	3.00	113.3
I-80/94 EB OUT	6+193.722	6+705.151	RT	3.60	1841.1
I-80/94 EB OUT	6+705.151	6+730.461	RT	3.60	86.5
I-80/94 WB OUT	4+500.000	5+502.007	LT	3.00	3006.0
RAMP U	240+217.764	240+317.391	LT	2.40	239.1
RAMP U	240+289.050	240+351.546	RT	1.80	112.5
RAMP U	240+351.546	240+474.066	RT	MEASURED AREA	534.7
RAMP U	240+474.066	240+577.465	LT	2.40	248.2
RAMP U	240+577.465	240+588.551	LT	2.70	29.9
I-80/94 WB OUT	5+738.995	5+989.500	LT	3.00	751.5
I-80/94 WB OUT	6+062.500	6+114.275	LT	3.60	186.4
I-80/94 WB OUT	6+114.275	6+427.298	LT	MEASURED AREA	598.2
I-94 WB	32+860.000	32+937.000	RT	3.00	231.0

STORM SEWER REMOVAL 300MM — TOTAL 828 METER

LOCATION	STATION	OFFSET	STATION	OFFSET	METER
I-80/94 WB	4+622.213	-17.33	4+622.239	-19.62	2.3
I-80/94 WB	4+605.507	-1.68	4+605.530	-14.80	13.1
I-80/94 WB	4+605.590	-14.80	4+605.628	-19.60	4.8
I-80/94 WB	4+657.025	-1.54	4+657.010	-14.80	13.3
I-80/94 WB	4+657.010	-14.80	4+657.016	-19.64	4.8
I-80/94 WB	4+698.873	-1.30	4+697.600	-14.80	13.6
I-80/94 WB	4+697.600	-14.80	4+696.957	-19.67	4.9
I-80/94 WB	4+702.001	-17.50	4+696.957	-19.67	5.5
I-80/94 WB	4+718.197	-1.25	4+718.577	-14.8	13.6
I-80/94 WB	4+718.577	-14.8	4+718.695	-19.49	4.7
I-80/94 WB	4+743.440	-1.14	4+742.664	-14.8	13.7
I-80/94 WB	4+742.664	-14.8	4+742.435	-19.28	4.5
I-80/94 WB	4+790.387	-0.90	4+791.245	-14.80	13.9
I-80/94 WB	4+791.245	-14.80	4+791.593	-18.86	4.1
I-80/94 WB	4+835.285	-0.64	4+830.922	-14.80	14.8
I-80/94 WB	4+830.922	-14.80	4+829.151	-18.80	4.4
I-80/94 WB	4+896.445	-0.38	4+896.971	-14.80	14.4
I-80/94 WB	4+896.971	-14.80	4+897.098	-18.70	3.9
I-80/94 WB	4+990.304	-0.12	4+990.114	-14.80	14.7
I-80/94 WB	4+990.114	-14.80	4+990.049	-18.13	3.3
I-80/94 WB	5+041.073	-0.05	5+045.238	-14.80	15.3
I-80/94 WB	5+045.238	-14.80	5+045.703	-15.86	1.2
I-80/94 WB	5+135.802	-1.31	5+138.361	-14.80	13.7
I-80/94 WB	5+165.736	1.90	5+165.748	-14.80	16.7
I-80/94 WB	5+165.748	-14.80	5+165.751	-17.04	2.2
I-80/94 WB	5+233.563	-17.52	5+226.043	-25.81	11.2
I-80/94 WB	5+301.404	-22.72	5+299.699	-17.68	5.3
I-80/94 WB	5+433.557	-24.42	5+433.410	-17.71	6.7
I-80/94 WB	5+433.410	-17.71	5+433.584	-16.03	1.7
I-80/94 WB	5+433.584	-16.03	5+433.789	-14.80	1.2
I-80/94 WB	5+433.789	-14.80	5+436.267	0.00	15.0
I-80/94 WB	5+449.819	-36.53	5+494.388	-34.28	44.6
I-80/94 WB	5+760.327	-12.42	5+760.539	-14.80	2.4
I-80/94 WB	5+760.539	-14.80	5+761.135	-21.48	6.7
I-80/94 WB	5+963.605	-3.23	5+963.809	-14.80	11.6
I-80/94 WB	5+963.809	-14.80	5+963.851	-17.20	2.4
I-80/94 EB	6+162.390	16.41	6+165.622	14.80	3.6
I-80/94 EB	6+165.622	14.80	6+191.698	1.83	29.1
I-80/94 EB	6+191.698	1.83	6+191.758	-0.12	1.9
I-80/94 EB	6+364.835	-11.27	6+373.583	-0.19	14.1
I-80/94 WB	6+558.695	-14.80	6+599.415	-14.60	40.7
BERNICE AVE	309+958.427	4.33	309+976.593	-2.33	19.3
175th	319+944.667	-3.97	319+947.358	9.11	13.4
175th	319+947.358	9.11	319+977.452	5.48	30.3
175th	319+977.607	4.85	319+988.901	4.85	11.3
175th	320+105.125	-4.856	320+106.377	1.832	6.8
BURNHAM AVE	60+074.938	8.13	60+075.145	10.58	2.5
BURNHAM AVE	60+075.145	10.73	60+078.302	-7.79	18.8
BURNHAM AVE	60+075.110	-8.36	60+075.830	-10.93	2.7
BURNHAM AVE	60+050.466	-13.091	60+032.871	-9.836	17.9
BURNHAM AVE	60+041.348	-22.924	60+041.419	-16.048	6.9
BURNHAM AVE	60+041.403	22.75	60+041.324	0.009	22.7
BURNHAM AVE	59+864.689	-8.91	59+864.185	-10.975	2.1
BURNHAM AVE	59+864.061	-10.96	59+862.992	-8.529	2.7
BURNHAM AVE	59+862.589	7.97	59+862.821	-5.983	14.0
BURNHAM AVE	59+922.707	8.492	59+923.488	10.216	1.9
BURNHAM AVE	59+923.917	10.226	59+926.498	-8.177	18.6
BURNHAM AVE	59+926.498	-8.177	59+925.013	-10.968	3.2
BURNHAM AVE	59+923.918	-8.376	59+924.604	-10.992	2.7
BURNHAM AVE	59+957.167	-22.422	59+957.246	-10.691	11.7
BURNHAM AVE	59+956.771	21.64	59+957.096	2.1	19.5
BURNHAM AVE	59+999.679	6.247	59+999.570	-4.401	10.6
I-80/94 EB	5+099.548	2.00	5+133.718	2.04	34.2
I-80/94 EB	5+099.336	0.31	5+122.158	-1.94	22.9
I-80/94 EB	5+123.494	-1.94	5+134.010	-1.12	10.5
I-80/94 EB	5+166.426	2.14	5+182.995	1.88	16.6
I-80/94 EB	5+220.272	0.41	5+260.383	0.48	40.1
I-80/94 EB	5+261.907	0.48	5+306.499	0.46	44.6

STORM SEWER REMOVAL 375MM — TOTAL 611 METER

LOCATION	STATION	OFFSET	STATION	OFFSET	METER
I-80/94 WB	5+182.721	-0.04	5+179.755	-14.80	15.1
I-80/94 WB	5+179.755	-14.80	5+178.565	-19.23	4.6
I-80/94 EB	5+802.268	0.30	5+940.166	0.27	137.9
I-80/94 WB	6+191.758	-0.12	6+326.370	-0.19	134.6
I-80/94 WB	6+557.899	-0.29	6+694.686	-0.51	136.8
I-80/94 WB	5+382.743	0.32	5+435.780	0.33	53.0
I-80/94 WB	5+438.797	0.35	5+488.841	0.30	50.0
I-80/94 WB	5+490.365	0.30	5+533.475	0.29	43.1
I-80/94 WB	5+534.999	0.29	5+555.648	0.29	20.6
I-80/94 WB	5+557.172	0.29	5+572.474	0.60	15.3

STORM SEWER REMOVAL 450MM — TOTAL 363 METER

LOCATION	STATION	OFFSET	STATION	OFFSET	METER
I-80/94	5+761.018	0.23	5+802.268	0.30	41.3
I-80/94	6+326.370	-0.19	6+523.338	-0.40	197.0
I-80/94	6+524.589	-0.40	6+557.899	-0.29	33.3
I-80/94	5+666.692	0.20	5+708.510	0.18	41.8
I-80/94	5+710.035	0.18	5+755.216	0.23	45.2
I-80/94	5+756.740	0.23	5+761.018	0.30	4.3

STORM SEWER REMOVAL 600MM — TOTAL 155 METER

LOCATION	STATION	OFFSET	STATION	OFFSET	METER
I-80/94 WB	5+098.735	0.12	5+098.727	-14.77	14.9
I-80/94 WB	5+098.727	-14.77	5+098.725	-17.77	3.0
I-80/94 WB	5+165.870	-17.22	5+178.565	-19.23	12.9
I-80/94 WB	6+508.105	-14.68	6+511.287	-0.40	14.6
I-80/94 EB	6+510.261	14.77	6+511.237	-1.25	16.0
I-80/94 EB	6+510.006	18.23	6+510.261	14.77	3.5
I-80/94 WB	5+573.999	0.26	5+618.991	0.29	45.0
I-80/94 WB	5+620.436	0.29	5+665.167	0.20	44.7

STORM SEWER REMOVAL 1200MM — TOTAL 266 METER

LOCATION	STATION	OFFSET	STATION	OFFSET	METER
I-80/94 WB	4+943.679	0.26	4+937.043	-14.77	16.4
I-80/94 WB	4+937.043	-14.77	4+934.336	-18.79	4.0
I-80/94 WB	6+523.835	-0.40	6+558.695	-14.80	37.7
BERNICE AVE	309+942.148	-11.16	309+985.945	-11.96	43.8
BERNICE AVE	310+013.802	-10.14	310+064.182	-11.11	50.4
BURNHAM AVE	60+050.466	-13.09	60+105.703	-13.76	55.2
BURNHAM AVE	60+105.967	14.10	60+048.639	13.28	57.3

CULVERTS TO BE GROUTED — TOTAL 425 CU M

LOCATION	FROM STA	OFFSET	TO STA	OFFSET	PIPE LENGTH	PIPE SIZE	CU M
I-80 EB	5+573.240	0.00	5+572.500	14.88	14.90	1.20	16.09
I-80 EB	5+572.500	14.88	5+571.640	26.00	11.15	1.20	12.04
I-80 EB/WB	5+576.170	-17.00	5+575.067	-33.00	16.00	1.20	17.28
BL RAMP U	240+423.350	-21.00	240+423.460	-3.25	17.75	1.20	75.77
BL RAMP U	240+426.460	-21.00	240+424.580	-3.45	17.55	1.20	74.91
EB CD	190+905.000	-17.50	190+904.800	-9.18	26.68	1.20	113.88
EB CD	190+905.900	-17.50	190+906.100	-9.44	26.94	1.20	114.99

CONCRETE REMOVAL — TOTAL 17 CU M

LOCATION	FROM STA.	OFFSET	TO STA.	OFFSET	PIPE LENGTH	PIPE SIZE	CU M
I-80 EB/WB	5+574.540	0.00	5+576.170	-17.00	17.00	1.08	17.3

REVISIONS	
NAME	DATE
1 KV	1/4/06

ILLINOIS DEPARTMENT OF TRANSPORTATION
F.A.I. ROUTE 80/94 (KINGERY EXPRESSWAY)
EB & WB INSIDE LANES (MAINLINE) CONSTRUCTION
COOK COUNTY

SCHEDULE OF QUANTITIES IV

SCALE:NONE
DATE: 1/4/06
DRAWN BY: RJS
CHECKED BY: DDH

TENG
TENG & ASSOCIATES, INC.
ENGINEERS/ARCHITECTS/PLANNERS
CHICAGO, ILLINOIS

..\SCT0032A.DGN, ..\AB990012A.DGN
12-30-2005, 14:40:23
T:\DOCUMENTY\97750\CIVIL\DGN\SCT0042A.DGN
1 2 3 4 5 6 7 8 9 10 11 12 13 14 15 16 17 18 19 20 21 22 23 24 25 26 27 28 29 30 31 32 33 34 35 36 37 38 39 40 41 42 43 44 45 46 47 48 49 50 51 52 53 54 55 56 57 58 59 60 61 62 63
V4RSHWZ

F.A.I. RTE.	SECTION	COUNTY	TOTAL SHEETS	SHEET NO.
80/94	*	COOK	631	30
STA.		TO STA.		
FED. ROAD DIST. NO.		ILLINOIS	FED. AID PROJECT	

* (2425 & 2626) R-2 CONTRACT NO. 62111

SCHEDULE OF QUANTITIES

PAVEMENT MARKING TAPE, TYPE III 100MM — TOTAL 12915 METER

LOCATION	FROM STATION	OFFSET	TO STATION	OFFSET	LENGTH (M)	COLOR	METER
PHASE III, STAGE I							
I-80/94 EB	4+500.000	11.28	5+400.000	11.28	900.00	YELLOW	900.0
	5+400.000	11.3	5+815.000	2.2	415.10	YELLOW	415.1
I-80/94 EB	4+500.000	26.75	5+400.000	22.08	900.01	YELLOW	900.0
	5+400.000	22.1	5+613.397	20.1	213.41	WHITE	213.4
	5+613.397	37.6	5+815.000	16.3	202.73	WHITE	202.7
I-94WB	33+461.427	3.6	34+213.689	6.9	752.27	YELLOW	752.3
	33+461.427	7.2	34+213.689	3.0	752.27	YELLOW	752.3
PHASE III, STAGE II							
I-80/94 EB	5+400.000	11.3	5+500.000	11.3	100.00	YELLOW	100.0
	5+500.000	11.3	5+828.000	20.0	328.12	YELLOW	328.1
	5+828.000	20.0	6+064.130	20.0	236.13	YELLOW	236.1
	6+064.130	20.0	6+159.370	18.5	95.25	YELLOW	95.3
	6+159.370	18.5	6+707.461	18.5	548.09	YELLOW	548.1
	6+707.461	18.5	6+814.721	16.9	107.27	YELLOW	107.3
I-80/94 EB	5+400.000	22.2	5+500.000	22.1	100.00	WHITE	100.0
	5+500.000	22.1	5+585.687	24.2	85.71	WHITE	85.7
RAMP W	5+331.708	33.0	5+585.687	31.4	253.98	YELLOW	254.0
	5+427.025	36.4	5+500.000	35.9	72.98	WHITE	73.0
I-80/94 WB	5+613.610	37.6	5+738.000	31.3	124.55	WHITE	124.5
	5+738.000	31.3	5+828.000	33.5	90.03	WHITE	90.0
	5+828.000	33.5	5+928.000	30.2	100.05	WHITE	100.1
	5+928.000	30.2	6+159.370	28.7	231.37	WHITE	231.4
	6+159.370	28.7	6+707.461	28.7	548.09	WHITE	548.1
	6+707.461	28.7	6+814.721	27.1	107.27	WHITE	107.3
PHASE III, STAGE III							
I-80/94 WB	6+149.124	36.8	6+550.000	3.5	403.20	WHITE	403.2
	6+550.000	3.5	6+814.721	3.5	264.72	WHITE	264.7
I-80/94 WB	6+148.466	26.0	6+550.000	13.7	401.72	YELLOW	401.7
	6+550.000	13.7	6+814.721	13.7	264.72	YELLOW	264.7
PHASE III, STAGE IV							
I-80/94 EB	5+500.000	11.3	5+827.929	4.1	328.01	YELLOW	328.0
	5+827.929	4.1	6+272.550	4.1	444.62	YELLOW	444.6
	6+272.550	4.1	6+520.812	18.2	248.66	YELLOW	248.7
	6+520.812	18.2	6+600.000	18.5	79.19	YELLOW	79.2
	5+650.000	11.6	5+828.000	7.7	178.04	WHITE	178.0
	5+828.000	7.7	6+272.550	7.7	444.55	WHITE	444.6
	6+272.550	7.7	6+428.000	17.7	155.77	WHITE	155.8
	5+650.000	18.6	5+827.845	23.0	177.90	YELLOW	177.9
	5+827.845	23.0	6+062.444	23.0	234.60	YELLOW	234.6
	6+062.444	23.0	6+159.247	21.5	96.81	YELLOW	96.8
	6+159.247	21.5	6+360.000	21.5	200.75	YELLOW	200.8
	6+360.000	21.5	6+428.000	21.6	68.00	YELLOW	68.0
	5+738.030	31.6	5+827.845	30.2	89.83	WHITE	89.8
	5+827.845	30.2	5+928.000	30.2	100.16	WHITE	100.2
	6+272.550	7.7	6+428.000	17.7	155.77	WHITE	155.8
	5+650.000	18.6	5+827.845	23.0	177.90	YELLOW	177.9
	5+827.845	23.0	6+062.444	23.0	234.60	YELLOW	234.6
	6+062.444	23.0	6+159.247	21.5	96.81	YELLOW	96.8
	6+159.247	21.5	6+360.000	21.5	200.75	YELLOW	200.8
	6+360.000	21.5	6+428.000	21.6	68.00	YELLOW	68.0
	5+738.030	31.6	5+827.845	30.2	89.83	WHITE	89.8
	5+827.845	30.2	5+928.000	30.2	100.16	WHITE	100.2

DRAINAGE STRUCTURES TO BE CLEANED — TOTAL 2 EACH

LOCATION	STATION	OFFSET	LT/RT	EACH
BURNHAM AVE	60+000.002	8.72	LT	1
BURNHAM AVE	59+999.976	6.30	RT	1

IMPACT ATTENUATORS (SEVERE USE, NARROW), TEST LEVEL 3 — TOTAL 2 EACH

LOCATION	STATION	OFFSET	LT/RT	EACH
I-80/94	6+114.275	22.08	LT	1
RAMP U	240+351.547	2.40	RT	1

IMPACT ATTENUATORS, TEMPORARY (NON- REDIRECTIVE), TEST LEVEL 2 — TOTAL 2 EACH

LOCATION	STATION	OFFSET	EACH
BURNHAM-STAGE 2	59+782.620	RT	1
BURNHAM-STAGE 2	60+156.380	RT	1

TEMPORARY SHEET PILING REMOVAL — TOTAL 3434 SQ M

LOCATION	FROM STATION	OFFSET	TO STATION	OFFSET	AREA	SQ M
I80	5+830.275	18.4RT	5+998.500	17.9 RT	692.65	692.65
I80	6+148.500	17.1 RT	6+350.000	17.1 RT	852.47	852.47
I80	6+392.376	16.52 LT	6+739.461	18.1 LT	1728.97	1728.97
	FROM STRUCTURAL (BURNHAM AVE)					160.00

AGGREGATE SUBGRADE 300MM — TOTAL 10787 SQ M

LOCATION	FROM STATION	TO STATION	WIDTH 1	WIDTH 2	AVG WIDTH	AREA	SQ M
BERNICE	309+940.000	309+973.568	9.55	9.55	9.55	320.57	320.57
BERNICE	310+025.886	310+064.000	9.55	9.55	9.55	363.99	363.99
175TH ST	319+940.000	319+973.993	9.55	9.55	9.55	324.63	324.63
175TH ST	320+025.809	320+090.122	9.55	9.55	9.55	614.19	614.19
175TH ST	320+090.122	320+113.191			MEASURED	297.05	297.05
RAILROAD	300+005.105	300+027.612			MEASURED	471.10	471.10
RAILROAD	300+027.612	300+046.836	14.446	12.35	13.40	257.56	257.56
RAILROAD	300+046.836	300+066.793	12.35	12.35	12.35	246.47	246.47
RAILROAD	300+066.793	300+088.779	12.35	15.10	13.73	301.76	301.76
RAILROAD	300+088.779	300+105.741			MEASURED	449.25	449.25
BURNHAM	59+814.300	59+943.655	17.75	17.75	17.75	2296.05	2296.05
BURNHAM/175TH	59+943.655	59+978.640	INTERSECTION		MEASURED	1086.53	1086.53
BURNHAM	59+978.640	60+022.077	17.75	17.75	17.75	771.01	771.01
BURNHAM/BERNICE	60+022.077	60+057.825	INTERSECTION		MEASURED	1105.65	1105.65
BURNHAM	60+057.825	60+151.231	17.75	17.75	17.75	1657.96	1657.96
BURNHAM	60+151.231	60+161.000			MEASURED	223.48	223.48

RELOCATE TEMPORARY CONCRETE BARRIER (SPECIAL) — 3162 METER

LOCATION	FROM STATION	OFFSET	TO STATION	OFFSET	LT/RT	METER
PH III ST I						
I-80 EB	5+633.320	5.30	5+815.000	1.90	RT/RT	181.71
I-80 EB	5+798.920	19.60	5+815.000	16.90	RT/RT	16.31
	5+815.000	16.90	5+900.000	16.90	RT/RT	85.00
	5+900.000	16.90	5+945.558	15.38	RT/RT	45.58
	5+945.558	15.38	6+250.000	15.38	RT/RT	304.44
	6+250.000	15.38	6+328.554	12.80	RT/RT	78.60
	6+328.554	12.80	6+510.560	0.16	RT/LT	182.44
	6+510.560	0.16	6+586.000	0.16	RT/LT	75.44
	6+674.700	0.00	6+814.721	2.20	LT/LT	140.04
	6+219.150	1.94	6+325.000	1.06	LT/RT	105.85
I-80 WB	5+829.967	24.54	5+847.150	24.24	LT/LT	17.19
	5+847.150	24.24	5+989.500	24.24	LT/LT	142.35
	6+062.502	24.24	6+100.002	24.51	LT/LT	37.50
	6+100.002	24.51	6+400.863	20.17	LT/LT	300.89
	6+400.863	20.17	6+728.655	20.17	LT/LT	327.79
PH III ST II						
I-80 EB	5+400.000	8.88	5+779.276	16.28	RT/RT	379.35
	5+779.276	16.28	5+815.144	19.03	RT/RT	35.97
	5+815.144	19.03	5+830.000	19.38	RT/RT	14.86
PH III ST III						
I-80 EB	6+325.000	0.30	6+347.000	0.48	LT/LT	22.00
	6+347.000	0.48	6+445.000	15.47	LT/RT	99.14
I-80 WB	6+175.321	23.28	6+200.045	22.41	LT/LT	24.74
PH III ST IV						
I-80 EB	5+814.822	20.88	6+360.000	20.88	RT/RT	545.18
						3162.38

TEMPORARY MECHANICALLY STABILIZED EARTH RETAINING WALL — TOTAL 510 SQ M

LOCATION	FROM STA	OFFSET	TO STA	OFFSET	SQ M
I-80/94	6+042.370	CL	6+134.880	CL	510.00

STONE RIPRAP, CLASS A3 — TOTAL 15 SQ M

LOCATION	FROM STATION	OFFSET	SQ M
I-80	6+061.87	48.92 LT	5.00
I-80	6+059.83	42.52 RT	5.00
BURNHAM AVE.	59+980.19	3.41 RT	5.00

FILTER FABRIC FOR USE WITH RIPRAP — TOTAL 15 SQ M

LOCATION	FROM STATION	OFFSET	SQ M
I-80	6+061.87	48.92 LT	5.00
I-80	6+059.83	42.52 RT	5.00
BURNHAM AVE.	59+980.19	3.41 RT	5.00

TRENCH BACKFILL — TOTAL 11700 CU M

LOCATION	FROM STATION	OFFSET	TO STATION	OFFSET	DIA	LENGTH	TRENCH WIDTH	CU M
	Refer to Drainage Schedule							4901.2
	Refer to Drainage Schedule							326.2
	Refer to Drainage Schedule							3.4
	Refer to Drainage Schedule							569.8
I-80/94	4+622.213	-17.33	4+622.239	-19.62	0.30	2.3	1.40	6.1
I-80/94	4+605.507	-1.68	4+605.590	-14.80	0.30	13.1	1.40	38.6
I-80/94	4+605.590	-14.80	4+605.628	-19.60	0.30	4.8	1.40	14.1
I-80/94	4+657.010	-14.80	4+657.016	-19.64	0.30	4.8	1.40	13.6
I-80/94	4+657.025	-1.54	4+657.010	-14.80	0.30	13.3	1.40	37.2
I-80/94	4+697.600	-14.80	4+696.957	-19.67	0.30	4.9	1.40	16.5
I-80/94	4+698.873	-1.30	4+697.600	-14.80	0.30	13.6	1.40	45.6
I-80/94	4+702.001	-17.50	4+696.957	-19.67	0.30	5.5	1.40	18.5
I-80/94	4+718.197	-1.25	4+718.577	-14.8	0.30	13.6	1.40	39.9
I-80/94	4+718.577	-14.8	4+718.695	-19.49	0.30	4.7	1.40	13.8
I-80/94	4+742.664	-14.8	4+742.435	-19.28	0.30	4.5	1.40	15.1
I-80/94	4+743.440	-1.14	4+742.664	-14.8	0.30	13.7	1.40	46.0
I-80/94	4+790.387	-0.90	4+791.245	-14.80	0.30	13.9	1.40	50.8
I-80/94	4+791.245	-14.80	4+791.593	-18.86	0.30	4.1	1.40	14.9
I-80/94	4+830.922	-14.80	4+829.151	-18.80	0.30	4.4	1.40	15.9
I-80/94	4+835.285	-0.64	4+830.922	-14.80	0.30	14.8	1.40	54.0
I-80/94	4+896.445	-0.38	4+896.971	-14.80	0.30	14.4	1.40	44.5
I-80/94	4+896.971	-14.80	4+897.098	-18.70	0.30	3.9	1.40	12.0
I-80/94	4+937.025	-14.80	4+934.337	-18.79	0.30	4.8	1.40	12.1
I-80/94 WB	4+937.043	-14.77	4+934.336	-18.79	1.20	4.8	2.30	17.9
I-80/94 WB	4+943.679	0.26	4+937.043	-14.77	1.20	16.4	2.30	64.3
I-80/94	4+943.680	-4.91	4+937.025	-14.80	0.30	11.9	1.40	30.1
I-80/94	4+990.114	-14.80	4+990.049	-18.13	0.30	3.3	1.40	7.9
I-80/94	4+990.304	-0.12	4+990.114	-14.80	0.30	14.7	1.40	35.0
I-80/94	5+041.073	-0.05	5+045.238	-14.80	0.30	15.3	1.40	36.5
I-80/94	5+045.238	-14.80	5+045.703	-15.86	0.30	1.2	1.40	2.8
I-80/94 WB	5+098.727	-14.77	5+098.725	-17.77	0.60	3.0	1.70	11.7
I-80/94 WB	5+098.735	0.12	5+098.727	-14.77	0.60	14.9	1.70	58.3
I-80/94	5+135.802	-1.31	5+138.361	-14.80	0.30	13.7	1.40	32.7
I-80/94	5+165.736	1.90	5+165.748	-14.80	0.30	16.7	1.40	39.8
I-80/94 WB	5+165.736	-3.95	5+165.748	-14.80	0.60	10.9	1.70	29.5
I-80/94	5+165.748	-14.80	5+165.751	-17.04	0.30	2.2	1.40	5.3
I-80/94 WB	5+165.748	-14.80	5+165.751	-17.04	0.60	2.2	1.70	6.1
I-80/94 WB	5+165.870	-17.22	5+178.565	-19.23	0.60	12.9	1.70	37.2
I-80/94	5+179.755	-14.80	5+178.565	-19.23	0.38	4.6	1.48	11.5
I-80/94	5+182.721	-0.04	5+179.755	-14.80	0.38	15.1	1.48	37.8
I-80/94	5+233.563	-17.52	5+226.043	-25.81	0.30	11.2	1.40	18.8
I-80/94	5+301.404	-22.72	5+299.699	-17.68	0.30	5.3	1.40	4.8
I-80/94	5+433.410	-17.71	5+433.584	-16.03	0.30	1.7	1.40	5.5
I-80/94	5+433.557	-24.42	5+433.410	-17.71	0.30	6.7	1.40	21.6
I-80/94	5+433.584	-16.03	5+433.789	-14.80	0.30	1.2	1.40	4.0
I-80/94	5+433.789	-14.80	5+436.267	0.00	0.30	15.0	1.40	48.4
I-80/94	5+449.819	-36.53	5+494.388	-34.28	0.30	44.6	1.40	143.9
I-80/94	5+760.327	-12.42	5+760.539	-14.80	0.30	2.4	1.40	9.7
I-80/94	5+760.539	-14.80	5+761.135	-21.48	0.30	6.7	1.40	27.3
I-80/94	5+761.018	0.23	5+802.268	0.30	0.45	41.3	1.55	147.2
I-80/94	5+802.268	0.30	5+940.186	0.27	0.38	137.9	1.48	346.2
I-80/94	5+939.996	2.07	5+940.167	0.27	0.30	1.8	1.40	4.5
I-80/94	5+963.605	-3.23	5+963.809	-14.80	0.30	11.6	1.40	29.2
I-80/94	5+963.809	-14.80	5+963.851	-17.20	0.30	2.4	1.40	6.0
I-80/94	6+162.390	16.41	6+165.622	14.80	0.30	3.6	1.40	9.1
I-80/94	6+165.622	14.80	6+191.698	1.83	0.30	29.1	1.40	73.5
I-80/94	6+191.698	1.83	6+191.758	-0.12	0.30	1.9	1.40	4.4
I-80/94	6+191.758	-0.12	6+326.370	-0.19	0.38	134.6	1.48	357.8
I-80/94	6+326.370	-0.19	6+523.338	-0.40	0.45	197.0	1.55	580.7
I-80/94	6+364.835	-11.27	6+373.583	-0.19	0.30	14.1	1.40	29.7
I-80/94 WB	6+508.105	-14.68	6+511.287	-0.40	0.60	14.6	1.70	69.7
I-80/94 EB	6+510.006	18.23	6+510.261	14.77	0.60	3.5	1.70	16.5
I-80/94 EB	6+510.261	14.77	6+511.287	-1.25	0.60	16.1	1.70	76.5
I-80/94 WB	6+523.835	-0.40	6+558.695	-14.80	1.20	37.7	2.30	434.0
I-80/94	6+524.589	-0.40	6+557.899	-0.29	0.45	33.3	1.55	113.7
I-80/94	6+557.899	-0.29	6+694.686	-0.51	0.38	136.8	1.48	424.2
I-80/94 WB	6+558.695	-14.80	6+599.415	-14.60	0.30	40.7	1.40	285.4
BURNHAM	59+862.589	7.97	59+862.821	-5.983	0.30	14.0	1.40	47.0
BURNHAM	59+864.061	-10.96	59+862.992	-8.529	0.30	2.7	1.40	8.9
BURNHAM	59+864.689	-8.91	59+864.185	-10.975	0.30	2.1	1.40	7.1
BURNHAM	59+922.707	8.492	59+923.488	10.216	0.30	1.9	1.40	6.4
BURNHAM	59+923.917	10.226	59+926.498	-8.177	0.30	18.6	1.40	62.5
BURNHAM	59+923.918	-8.376	59+924.604	-10.992	0.30	2.7	1.40	9.1
BURNHAM	59+926.498	-8.177	59+925.013	-10.968	0.30	3.2	1.40	10.6
BURNHAM	59+956.771	21.64	59+957.096	2.1	0.30	19.5	1.40	65.7
BURNHAM	59+957.167	-22.422	59+957.246	-10.691	0.30	11.7	1.40	39.5
BURNHAM	59+999.679	6.247	59+999.570	-4.401	0.30	10.6	1.40	35.8
BURNHAM	60+041.348	-22.924	60+041.419	-16.048	0.30	6.9	1.40	23.1
BURNHAM	60+041.403	22.75	60+041.324	0.009	0.30	22.7	1.40	76.5
BURNHAM	60+050.466	-13.091	60+032.871	-9.836	0.30	17.9	1.40	50.2
BURNHAM	60+074.938	8.13	60+075.145	10.58	0.30	2.5	1.40	5.5
BURNHAM	60+075.110	-8.36	60+075.830	-10.93	0.30	2.7	1.40	6.0
BURNHAM	60+075.145	10.73	60+078.302	-7.79	0.30	18.8	1.40	42.1
BERNICE	309+958.427	4.33	309+976.592	-2.33	0.30	19.3	1.40	27.1
175TH	319+944.667	-3.97	319+947.358	9.11	0.30	13.4	1.40	43.0
175TH	319+977.607	4.85	319+988.901	4.85	0.30	11.3	1.40	36.4
175TH	320+105.125	-4.856	320+106.377	1.832	0.30	6.8	1.40	10.5

REVISIONS	
NAME	DATE
1 RJS	1/4/06

ILLINOIS DEPARTMENT OF TRANSPORTATION
F.A.I. ROUTE 80/94 (KINGERY EXPRESSWAY)
EB & WB INSIDE LANES (MAINLINE) CONSTRUCTION
COOK COUNTY

SCHEDULE OF QUANTITIES IX

SCALE: NONE DRAWN BY: RJS
DATE: 1/4/06 CHECKED BY: DDH

TENG & ASSOCIATES, INC.
ENGINEERS/ARCHITECTS/PLANNERS
CHICAGO, ILLINOIS

..\SCITR042A.DGN, ..\AB99D002A.DGN
12-30-2005,lm4246 T:\DOCUMENT\93050\CIVL\DGN\SCITD092A.DGN
VARSHNKZ
1 2 3 4 5 6 7 8 9 10 11 12 13 14 15 16 17 18 19 20 21 22 23 24 25 26 27 28 29 30 31 32 33 34 35 36 37 38 39 40 41 42 43 44 45 46 47 48 49 50 51 52 53 54 55 56 57 58 59 60 61 62 63

F.A.I. RTE.	SECTION	COUNTY	TOTAL SHEETS	SHEET NO.
80/94	*	COOK	631	31
STA.		TO STA.		
FED. ROAD DIST. NO.		ILLINOIS	FED. AID PROJECT	

* (2425 & 2626) R-2 CONTRACT NO. 62111

SCHEDULE OF QUANTITIES

I-80/94 MAINLINE EARTHWORK

STATION	TO STATION	EARTH EXCAVATION				REMOVAL AND DISPOSAL OF UNSUITABLE MATERIAL				STRUCTURE EXCAVATION				SPOIL FROM STRUCTURE EXCAVATION				TOTAL SUITABLE EXCAVATION				EXCAVATION TO BE USED IN EMBANKMENT (15% SHRINKAGE)				EMBANKMENT				EARTHWORK BALANCE WASTE (+) OR SHORTAGE (-)			
		PH3 ST1 CUM	PH3 ST2 CUM	PH3 ST3 CUM	PH3 ST4 CUM	PH3 ST1 CUM	PH3 ST2 CUM	PH3 ST3 CUM	PH3 ST4 CUM	PH3 ST1 CUM	PH3 ST2 CUM	PH3 ST3 CUM	PH3 ST4 CUM	PH3 ST1 CUM	PH3 ST2 CUM	PH3 ST3 CUM	PH3 ST4 CUM	PH3 ST1 CUM	PH3 ST2 CUM	PH3 ST3 CUM	PH3 ST4 CUM	PH3 ST1 CUM	PH3 ST2 CUM	PH3 ST3 CUM	PH3 ST4 CUM	PH3 ST1 CUM	PH3 ST2 CUM	PH3 ST3 CUM	PH3 ST4 CUM	PH3 ST1 CUM	PH3 ST2 CUM	PH3 ST3 CUM	PH3 ST4 CUM
I-80/94																																	
4+500.000	4+525.000	0.0	0.0	0.0	0.0	0.0	0.0	0.0	0.0	0.0	0.0	0.0	0.0	0.0	0.0	0.0	0.0	0.0	0.0	0.0	0.0	0.0	0.0	0.0	0.0	566.9	0.0	0.0	0.0	-566.9	0.0	0.0	0.0
4+525.000	4+535.807	0.0	0.0	0.0	0.0	0.0	0.0	0.0	0.0	0.0	0.0	0.0	0.0	0.0	0.0	0.0	0.0	0.0	0.0	0.0	0.0	0.0	0.0	0.0	0.0	270.8	0.0	0.0	0.0	-270.8	0.0	0.0	0.0
4+535.807	4+550.000	0.0	0.0	0.0	0.0	0.0	0.0	0.0	0.0	0.0	0.0	0.0	0.0	0.0	0.0	0.0	0.0	0.0	0.0	0.0	0.0	0.0	0.0	0.0	0.0	376.8	0.0	0.0	0.0	-376.8	0.0	0.0	0.0
4+550.000	4+565.944	0.0	0.0	0.0	0.0	0.0	0.0	0.0	0.0	0.0	0.0	0.0	0.0	0.0	0.0	0.0	0.0	0.0	0.0	0.0	0.0	0.0	0.0	0.0	0.0	446.1	0.0	0.0	0.0	-446.1	0.0	0.0	0.0
4+565.944	4+575.000	0.0	0.0	0.0	0.0	0.0	0.0	0.0	0.0	0.0	0.0	0.0	0.0	0.0	0.0	0.0	0.0	0.0	0.0	0.0	0.0	0.0	0.0	0.0	0.0	263.3	0.0	0.0	0.0	-263.3	0.0	0.0	0.0
4+575.000	4+600.000	0.0	0.0	0.0	0.0	0.0	0.0	0.0	0.0	0.0	0.0	0.0	0.0	0.0	0.0	0.0	0.0	0.0	0.0	0.0	0.0	0.0	0.0	0.0	0.0	746.6	0.0	0.0	0.0	-746.6	0.0	0.0	0.0
4+600.000	4+625.000	0.0	0.0	0.0	0.0	0.0	0.0	0.0	0.0	0.0	0.0	0.0	0.0	0.0	0.0	0.0	0.0	0.0	0.0	0.0	0.0	0.0	0.0	0.0	0.0	691.3	0.0	0.0	0.0	-691.3	0.0	0.0	0.0
4+625.000	4+650.000	0.0	0.0	0.0	0.0	0.0	0.0	0.0	0.0	0.0	0.0	0.0	0.0	0.0	0.0	0.0	0.0	0.0	0.0	0.0	0.0	0.0	0.0	0.0	0.0	611.1	0.0	0.0	0.0	-611.1	0.0	0.0	0.0
4+650.000	4+675.000	0.0	0.0	0.0	0.0	0.0	0.0	0.0	0.0	0.0	0.0	0.0	0.0	0.0	0.0	0.0	0.0	0.0	0.0	0.0	0.0	0.0	0.0	0.0	0.0	628.0	0.0	0.0	0.0	-628.0	0.0	0.0	0.0
4+675.000	4+700.000	0.0	0.0	0.0	0.0	0.0	0.0	0.0	0.0	0.0	0.0	0.0	0.0	0.0	0.0	0.0	0.0	0.0	0.0	0.0	0.0	0.0	0.0	0.0	0.0	670.6	0.0	0.0	0.0	-670.6	0.0	0.0	0.0
4+700.000	4+725.000	0.0	0.0	0.0	0.0	0.0	0.0	0.0	0.0	0.0	0.0	0.0	0.0	0.0	0.0	0.0	0.0	0.0	0.0	0.0	0.0	0.0	0.0	0.0	0.0	700.4	0.0	0.0	0.0	-700.4	0.0	0.0	0.0
4+725.000	4+750.000	0.0	0.0	0.0	0.0	0.0	0.0	0.0	0.0	0.0	0.0	0.0	0.0	0.0	0.0	0.0	0.0	0.0	0.0	0.0	0.0	0.0	0.0	0.0	0.0	719.8	0.0	0.0	0.0	-719.8	0.0	0.0	0.0
4+750.000	4+775.000	15.8	0.0	0.0	0.0	0.0	0.0	0.0	0.0	0.0	0.0	0.0	0.0	0.0	0.0	0.0	0.0	15.8	0.0	0.0	0.0	13.4	0.0	0.0	0.0	699.4	0.0	0.0	0.0	-686.0	0.0	0.0	0.0
4+775.000	4+800.000	15.8	0.0	0.0	0.0	0.0	0.0	0.0	0.0	0.0	0.0	0.0	0.0	0.0	0.0	0.0	0.0	15.8	0.0	0.0	0.0	13.4	0.0	0.0	0.0	708.8	0.0	0.0	0.0	-695.4	0.0	0.0	0.0
4+800.000	4+825.000	0.0	0.0	0.0	0.0	0.0	0.0	0.0	0.0	0.0	0.0	0.0	0.0	0.0	0.0	0.0	0.0	0.0	0.0	0.0	0.0	0.0	0.0	0.0	0.0	728.0	0.0	0.0	0.0	-728.0	0.0	0.0	0.0
4+825.000	4+850.000	0.0	0.0	0.0	0.0	0.0	0.0	0.0	0.0	0.0	0.0	0.0	0.0	0.0	0.0	0.0	0.0	0.0	0.0	0.0	0.0	0.0	0.0	0.0	0.0	680.3	0.0	0.0	0.0	-680.3	0.0	0.0	0.0
4+850.000	4+875.000	0.0	0.0	0.0	0.0	0.0	0.0	0.0	0.0	0.0	0.0	0.0	0.0	0.0	0.0	0.0	0.0	0.0	0.0	0.0	0.0	0.0	0.0	0.0	0.0	596.1	0.0	0.0	0.0	-596.1	0.0	0.0	0.0
4+875.000	4+900.000	0.0	0.0	0.0	0.0	0.0	0.0	0.0	0.0	0.0	0.0	0.0	0.0	0.0	0.0	0.0	0.0	0.0	0.0	0.0	0.0	0.0	0.0	0.0	0.0	510.0	0.0	0.0	0.0	-510.0	0.0	0.0	0.0
4+900.000	4+925.000	0.0	0.0	0.0	0.0	0.0	0.0	0.0	0.0	0.0	0.0	0.0	0.0	0.0	0.0	0.0	0.0	0.0	0.0	0.0	0.0	0.0	0.0	0.0	0.0	388.8	0.0	0.0	0.0	-388.8	0.0	0.0	0.0
4+925.000	4+950.000	0.0	0.0	0.0	0.0	0.0	0.0	0.0	0.0	0.0	0.0	0.0	0.0	0.0	0.0	0.0	0.0	0.0	0.0	0.0	0.0	0.0	0.0	0.0	0.0	257.8	0.0	0.0	0.0	-257.8	0.0	0.0	0.0
4+950.000	4+975.000	0.0	0.0	0.0	0.0	0.0	0.0	0.0	0.0	0.0	0.0	0.0	0.0	0.0	0.0	0.0	0.0	0.0	0.0	0.0	0.0	0.0	0.0	0.0	0.0	331.9	0.0	0.0	0.0	-331.9	0.0	0.0	0.0
4+975.000	5+000.000	14.5	0.0	0.0	0.0	0.0	0.0	0.0	0.0	0.0	0.0	0.0	0.0	0.0	0.0	0.0	0.0	14.5	0.0	0.0	0.0	12.3	0.0	0.0	0.0	477.5	0.0	0.0	0.0	-465.2	0.0	0.0	0.0
5+000.000	5+025.000	30.0	0.0	0.0	0.0	0.0	0.0	0.0	0.0	0.0	0.0	0.0	0.0	0.0	0.0	0.0	0.0	30.0	0.0	0.0	0.0	25.5	0.0	0.0	0.0	519.4	0.0	0.0	0.0	-493.9	0.0	0.0	0.0
5+025.000	5+050.000	32.1	0.0	0.0	0.0	0.0	0.0	0.0	0.0	0.0	0.0	0.0	0.0	0.0	0.0	0.0	0.0	32.1	0.0	0.0	0.0	27.3	0.0	0.0	0.0	580.3	0.0	0.0	0.0	-552.9	0.0	0.0	0.0
5+050.000	5+075.000	33.3	0.0	0.0	0.0	0.0	0.0	0.0	0.0	0.0	0.0	0.0	0.0	0.0	0.0	0.0	0.0	33.3	0.0	0.0	0.0	28.3	0.0	0.0	0.0	649.3	0.0	0.0	0.0	-621.0	0.0	0.0	0.0
5+075.000	5+100.000	33.0	0.0	0.0	0.0	0.0	0.0	0.0	0.0	0.0	0.0	0.0	0.0	0.0	0.0	0.0	0.0	33.0	0.0	0.0	0.0	28.1	0.0	0.0	0.0	683.5	0.0	0.0	0.0	-655.5	0.0	0.0	0.0
5+100.000	5+125.000	34.5	0.0	0.0	0.0	0.0	0.0	0.0	0.0	0.0	0.0	0.0	0.0	0.0	0.0	0.0	0.0	34.5	0.0	0.0	0.0	29.3	0.0	0.0	0.0	654.5	0.0	0.0	0.0	-625.2	0.0	0.0	0.0
5+125.000	5+150.000	41.6	0.0	0.0	0.0	0.0	0.0	0.0	0.0	0.0	0.0	0.0	0.0	0.0	0.0	0.0	0.0	41.6	0.0	0.0	0.0	35.4	0.0	0.0	0.0	542.8	0.0	0.0	0.0	-507.4	0.0	0.0	0.0
5+150.000	5+175.000	52.3	0.0	0.0	0.0	0.0	0.0	0.0	0.0	0.0	0.0	0.0	0.0	0.0	0.0	0.0	0.0	52.3	0.0	0.0	0.0	44.4	0.0	0.0	0.0	427.1	0.0	0.0	0.0	-382.7	0.0	0.0	0.0
5+175.000	5+200.000	61.0	0.0	0.0	0.0	0.0	0.0	0.0	0.0	0.0	0.0	0.0	0.0	0.0	0.0	0.0	0.0	61.0	0.0	0.0	0.0	51.9	0.0	0.0	0.0	313.6	0.0	0.0	0.0	-261.8	0.0	0.0	0.0
5+200.000	5+225.000	68.6	0.0	0.0	0.0	0.0	0.0	0.0	0.0	0.0	0.0	0.0	0.0	0.0	0.0	0.0	0.0	68.6	0.0	0.0	0.0	58.3	0.0	0.0	0.0	168.9	0.0	0.0	0.0	-110.5	0.0	0.0	0.0
5+225.000	5+250.000	112.8	0.0	0.0	0.0	0.0	0.0	0.0	0.0	0.0	0.0	0.0	0.0	0.0	0.0	0.0	0.0	112.8	0.0	0.0	0.0	95.8	0.0	0.0	0.0	74.4	0.0	0.0	0.0	21.5	0.0	0.0	0.0
5+250.000	5+275.000	171.4	0.0	0.0	0.0	0.0	0.0	0.0	0.0	0.0	0.0	0.0	0.0	0.0	0.0	0.0	0.0	171.4	0.0	0.0	0.0	145.7	0.0	0.0	0.0	48.4	0.0	0.0	0.0	97.3	0.0	0.0	0.0
5+275.000	5+300.000	195.8	0.0	0.0	0.0	0.0	0.0	0.0	0.0	0.0	0.0	0.0	0.0	0.0	0.0	0.0	0.0	195.8	0.0	0.0	0.0	166.4	0.0	0.0	0.0	49.1	0.0	0.0	0.0	117.3	0.0	0.0	0.0
5+300.000	5+301.858	10.4	0.0	0.0	0.0	0.0	0.0	0.0	0.0	0.0	0.0	0.0	0.0	0.0	0.0	0.0	0.0	10.4	0.0	0.0	0.0	8.8	0.0	0.0	0.0	3.8	0.0	0.0	0.0	5.0	0.0	0.0	0.0
5+301.858	5+325.000	43.6	0.0	0.0	0.0	0.0	0.0	0.0	0.0	0.0	0.0	0.0	0.0	0.0	0.0	0.0	0.0	43.6	0.0	0.0	0.0	37.1	0.0	0.0	0.0	70.0	0.0	0.0	0.0	-32.9	0.0	0.0	0.0
5+325.000	5+350.000	8.4	0.0	0.0	3.5	0.0	0.0	0.0	0.0	0.0	0.0	0.0	0.0	0.0	0.0	0.0	0.0	8.4	0.0	0.0	3.5	7.1	0.0	0.0	3.0	162.3	0.0	0.0	0.0	-155.1	0.0	0.0	3.0
5+350.000	5+375.000	0.0	0.0	0.0	39.8	0.0	0.0	0.0	0.0	0.0	0.0	0.0	0.0	0.0	0.0	0.0	0.0	0.0	0.0	0.0	39.8	0.0	0.0	0.0	33.8	337.0	0.0	0.0	1.3	-337.0	0.0	0.0	32.5
5+375.000	5+400.000	0.0	0.0	0.0	86.4	0.0	0.0	0.0	0.0	0.0	0.0	0.0	0.0	0.0	0.0	0.0	0.0	0.0	0.0	0.0	86.4	0.0	0.0	0.0	73.4	539.9	0.0	0.0	1.3	-539.9	0.0	0.0	72.2
5+400.000	5+425.000	1.1	0.0	0.0	96.1	0.0	0.0	0.0	0.0	0.0	0.0	0.0	0.0	0.0	0.0	0.0	0.0	1.1	0.0	0.0	96.1	1.0	0.0	0.0	81.7	617.1	0.0	0.0	0.0	-616.2	0.0	0.0	81.7
5+425.000	5+450.000	12.8	0.0	0.0	79.6	0.0	0.0	0.0	0.0	0.0	0.0	0.0	0.0	0.0	0.0	0.0	0.0	12.8	0.0	0.0	79.6	10.8	0.0	0.0	67.7	603.5	0.0	0.0	0.0	-592.7	0.0	0.0	67.7
5+450.000	5+475.000	22.3	0.0	0.0	75.9	0.0	0.0	0.0	0.0	0.0	0.0	0.0	0.0	0.0	0.0	0.0	0.0	22.3	0.0	0.0	75.9	18.9	0.0	0.0	64.5	631.6	0.0	0.0	3.9	-612.7	0.0	0.0	60.6
5+475.000	5+500.000	35.5	0.0	0.0	107.0	0.0	0.0	0.0	0.0	0.0	0.0	0.0	0.0	0.0	0.0	0.0	0.0	35.5	0.0	0.0	107.0	30.2	0.0	0.0	91.0	673.1	0.0	0.0	7.1	-643.0	0.0	0.0	83.8
5+500.000	5+525.000	46.8	0.0	0.0	103.1	0.0	0.0	0.0	0.0	0.0	0.0	0.0	0.0	0.0	0.0	0.0	0.0	46.8	0.0	0.0	103.1	39.7	0.0	0.0	87.7	697.8	0.0	0.0	5.9	-658.0	0.0	0.0	81.8
5+525.000	5+550.000	40.6	0.0	0.0	38.4	0.0	0.0	0.0	0.0	0.0	0.0	0.0	0.0	0.0	0.0	0.0	0.0	40.6	0.0	0.0	38.4	34.5	0.0	0.0	32.6	712.5	0.0	0.0	2.6	-678.0	0.0	0.0	30.0
5+550.000	5+575.000	37.4	0.0	0.0	0.0	0.0	0.0	0.0	0.0	0.0	0.0	0.0	0.0	0.0	0.0	0.0	0.0	37.4	0.0	0.0	0.0	31.8	0.0	0.0	0.0	722.4	0.0	0.0	0.0	-690.6	0.0	0.0	0.0
5+575.000	5+600.000	37.1	0.0	0.0	0.0	0.0	0.0	0.0	0.0	0.0	0.0	0.0	0.0	0.0	0.0	0.0	0.0	37.1	0.0	0.0	0.0	31.6	0.0	0.0	0.0	735.5	0.0	0.0	0.0	-703.9	0.0	0.0	0.0
5+600.000	5+625.000	95.5	0.0	0.0	0.0	0.0	0.0	0.0	0.0	0.0	0.0	0.0	0.0	0.0	0.0	0.0	0.0	95.5	0.0	0.0	0.0	81.2	0.0	0.0	0.0	736.0	0.0	0.0	0.0	-654.8	0.0	0.0	0.0
5+625.000	5+650.000	154.5	4.3	0.0	0.0	0.0	0.0	0.0	0.0	0.0	0.0	0.0	0.0	0.0	0.0	0.0	0.0	154.5	4.3	0.0	0.0	131.3	3.6	0.0	0.0	604.6	127.1	0.0	0.0	-473.3	-123.5	0.0	0.0
5+650.000	5+675.000	129.9	12.6	0.0	0.0	0.0	0.0	0.0	0.0	0.0	0.0	0.0	0.0	0.0	0.0	0.0	0.0	129.9	12.6	0.0	0.0	110.4	10.7	0.0	0.0	460.7	239.3	0.0	0.0	-350.3	-228.5	0.0	0.0
5+675.000	5+700.000	71.5	21.1	0.0	0.0	0.0	0.0	0.0	0.0	0.0	0.0	0.0	0.0	0.0	0.0	0.0	0.0	71.5	21.1	0.0	0.0	60.8	18.0	0.0	0.0	406.2	206.3	0.0	0.0	-345.4	-188.3	0.0	0.0
5+700.000	5+725.000	20.6	34.2	0.0	0.0	0.0	0.0	0.0	0.0	0.0	0.0	0.0	0.0	0.0	0.0	0.0	0.0	20.6	34.2	0.0	0.0	17.5	29.1	0.0	0.0	406.2	94.1	0.0	0.0	-388.7	-65.0	0.0	0.0
5+725.000	5+750.000	2.9	44.7	0.0	0.0	0.0	0.0	0.0	0.0	0.0	0.0	0.0	0.0	0.0	0.0	0.0	0.0	2.9	44.7	0.0	0.0	2.4	38.0	0.0	0.0	359.2	0.0	0.0	0.0	-356.7	38.0	0.0	0.0
5+750.000	5+775.000	6.5	45.2	0.0	0.0	0.0	0.0	0.0	0.0	0.0	0.0	0.0	0.0	0.0	0.0	0.0	0.0	6.5	45.2	0.0	0.0	5.5	38.4	0.0	0.0	225.2	0.0	0.0	0.0	-219.7	38.4	0.0	0.0
5+775.000	5+800.000	78.8	32.2	0.0	0.0	0.0	0.0	0.0	0.0	0.0	0.0	0.0	0.0	0.0	0.0	0.0	0.0	78.8	32.2	0.0	0.0	66.9	27.4	0.0	0.0	99.5	0.0	0.0	0.0	-32.6	27.4	0.0	0.0
5+800.000	5+815.000	128.6	10.1	0.0	0.0	0.0	0.0	0.0	0.0	0.0	0.0	0.0	0.0	0.0	0.0	0.0	0.0	128.6	10.1	0.0	0.0	109.3	8.5	0.0	0.0	11.0	0.0	0.0	0.0	98.4	8.5	0.0	0.0
5+815.000	5+825.000	118.1	70.1	0.0	0.0	0.0	0.0	0.0	0.0	0.0	0.0	0.0	0.0	0.0	0.0	0.0	0.0	118.1	70.1	0.0	0.0	100.3	59.6	0.0	0.0	2.6	0.0	0.0	0.0	97.7	59.6	0.0	0.0
5+825.000	5+850.000	407.6	516.4	0.0	0.0	0.0	0.0	0.0	0.0	0.0	0.0	0.0	0.0	0.0	0.0	0.0	0.0	407.6	516.4	0.0	0.0	346.5	438.9	0.0	0.0	0.0	0.0	0.0	0.0	346.5	438.9	0.0	0.0
5+850.000	5+875.000	565.9	753.8	0.0	0.0	0.0	0.0	0.0	0.0	0.0	0.0	0.0	0.0	0.0	0.0	0.0	0.0	565.9	753.8	0.0	0.0	481.0	640.7	0.0	0.0	0.0	0.0	0.0	0.0	481.0	640.7	0.0	0.0
5+875.000	5+900.000	659.3	752.6	0.0	0.0	0.0	0.0	0.0	0.0	0.0	0.0	0.0	0.0	0.0	0.0	0.0	0.0	659.3	752.6	0.0	0.0	560.4	639.7	0.0	0.0	0.0	0.0	0.0	0.0	560.4	639.7	0.0	0.0
5+900.000	5+918.766	539.2	597.2	0.0	0.0	0.0	0.0	0.0	0.0	0.0	0.0	0.0	0.0	0.0	0.0	0.0	0.0	539.2	597.2	0.0	0.0	458.4	507.6	0.0	0.0	0.0	0.0	0.0	0.0	458.4	507.6	0.0	0.0
5+918.766	5+925.000	186.7	226.1	0.0	0.0	0.0	0.0	0.0	0.0	0.0	0.0	0.0	0.0	0.0	0.0	0.0	0.0	186.7	226.1	0.0	0.0	158.7	192.2	0.0	0.0	0.0	0.0	0.0	0.0	158.7	192.2	0.0	0.0
5+925.000	5+950.000	776.0	950.3	0.0	0.0	0.0	0.0	0.0	0.0	0.0	0.0	0.0	0.0	0.0	0.0	0.0	0.0	776.0	950.3	0.0	0.0	659.6	807.7	0.0	0.0	0.0	0.0	0.0	0.0	659.6	807.7	0.0	0.0
5+950.000	5+975.000	801.3	1003.4	0.0	0.0	0.0	0.0	0.0	0.0	0.0	0.0	0.0	0.0	0.0	0.0	0.0	0.0	801.3	1003.4	0.0	0.0	681.1	852.9	0.0	0.0	0.0	0.0	0.0	0.0	681.1	852.9	0.0	0.0
5+975.000	6+000.000	742.7	1526.2	0.0	0.0	0.0	0.0	0.0	0.0	0.0	0.0	0.0	0.0	0.0	0.0	0.0	0.0	742.7	1526.2	0.0	0.0	631.3	1297.3	0.0	0.0	0.0	0.0	0.0	0.0	631.3	1297.3	0.0	0.0
6+000.000	6+025.000	340.6	1015.5	0.0	0.0	0.0	0.0	0.0	0.0	0.0	0.0	0.0	0.0	0.0	0.0	0.0	0.0	340.6	1015.5	0.0	0.0	289.5	863.2	0.0	0.0	0.0	0.0	0.0	0.0	289.5	863.2	0.0	0.0
6+025.000	6+050.000	0.0	0.0	0.0	0.0	0.0	0.0	0.0	0.0	58.4	0.0	0.0	0.0	45.5	0.0	0.0	0.0	45.5	0.0	0.0	0.0	38.7	0.0	0.0	0.0	667.5	623.2	0.0	0.0	-628.8	-623.2	0.0	0.0
6+050.000	6+075.000	5.4	8.6	403.5	0.0	0.0	0.0	0.0	0.0	87.0	0.0	0.0	0.0	71.0	0.0	0.0	0.0	76.4	8.6	403.5	0.0	64.9	7.3	343.0	0.0	1816.6	2144.5	0.0	0.0	-1751.7	-2137.2	343.0	0.0
6+075.000	6+100.000	12.9	17.3	808.1	0.0	0.0	0.0	0.0	0.0	73.3	0.0	0.0	0.0	63.8	0.0	0.0	0.0	76.6	17.3	808.1	0.0	65.1	14.7	686.9	0.0	2247.3	3048.0	0.0	0.0	-2182.1	-3033.3	686.9	0.0
6+100.000	6+125.000	38.4	17.3	806.0	0.0	0.0	0.0	0.0	0.0	114.6	0.0	0.0	0.0	89.8	0.0	0.0	0.0	128.1	17.3	806.0	0.0	108.9	14.7	685.1	0.0	1306.3	2962.3	0.0	0.0	-1197.4	-2947.6	685.1	0.0
6+125.000	6+150.000	427.6	452.8	401.4	0.0	0.0	0.0	0.0	0.0	70.0	0.0	0.0	0.0	51.5	0.0	0.0	0.0	479.1	452.8	401.4	0.0	407.3	384.8	341.2	0.0	208.2	1435.6	0.0	0.0	199.1	-1050.8	341.2	0.0
6+150.000	6+175.000	731.1	1059.6	0.0	0.0	0.0	0.0	0.0	0.0	0.0	0.0	0.0	0.0	0.0	0.0	0.0	0.0	731.1	1059.6	0.0	0.0	621.5	900.7	0.0	0.0	0.0	0.0	0.0	0.0	621.5	900.7	0.0	0.0
6+175.000	6+200.000	664.3	1215.4	0.0	0.0	0.0	0.0	0.0	0.0	0.0	0.0	0.0	0.0	0.0	0.0	0.0	0.0	664.3	1215.4	0.0	0.0	564.6	1033.1	0.0	0.0	0.0	0.0	0.0	0.0	564.6	1033.1	0.0	0.0
6+200.000	6+225.000	638.4	1177.0	0.0	0.0	0.0	0.0	0.0	0.0	0.0	0.0	0.0	0.0	0.0	0.0	0.0	0.0	638.4	1177.0	0.0	0.0	542.6	1000.5	0.0	0.0	0.0	0.0	0.0	0.0	542.6	1000.5	0.0	0.0
6+225.000	6+250.000	594.8	1112.1	0.0	0.0	0.0	0.0	0.0	0.0	0.0	0.0	0.0	0.0	0.0	0.0	0.0	0.0	594.8	1112.1	0.0	0.0	505.5	945.3	0.0	0.0	0.0	0.0	0.0	0.0	505.5	945.3	0.0	0.0
6+250.000	6+275.000	549.9	1003.0	0.0	0.0	0.0	0.0	0.0	0.0	0.0	0.0	0.0	0.0	0.0	0.0	0.0	0.0	549.9	1003.0	0.0	0.0	467.4	852.6	0.0	0.0	0.0	0.0	0.0	0.0	467.4	852.6	0.0	0.0
6+275.000	6+300.000	523.6	842.0	0.0	0.0	0.0	0.0	0.0	0.0	0.0	0.0	0.0	0.0	0.0	0.0	0.0	0.0	523.6	842.0	0.0	0.0	445.1	715.7	0.0	0.0	0.0	0.0	0.0	0.0	445.1	715.7	0.0	0.0
6+300.000	6+325.000	528.3	713.3	0.0	0.0	0.0	0.0	0.0	0.0	0.0	0.0	0.0	0.0	0.0	0.0	0.0	0.0	528.3	713.3	0.0	0.0	449.0	606.3	0.0	0.0	0.0	0.0	0.0	0.0	449.0	606.3	0.0	0.0
6+325.000	6+350.000	465.4	554.1	0.0	0.0	0.0	0.0	0.0	0.0	0.0	0.0	0.0	0.0	0.0	0.0	0.0	0.0	465.4	554.1	0.0	0.0	395.6	471.0	0.0	0.0	0.0	0.0	0.0	0.0	395.6	471.0	0.0	0.0
6+350.000	6+375.000	260.1	265.9	0.0	0.0	0.0	0.0	0.0	0.0	0.0	0.0	0.0	0.0	0.0	0.0	0.0	0.0	260.1	265.9	0.0	0.0	221.1	226.0	0.0	0.0	1.3	2.8	0.0	0.0	219.9	223.2	0.0	0.0
6+375.000	6+400.000	63.0	69.3	0.0	0.0	0.0	0.0	0.0	0.0	0.0	0.0	0.0	0.0	0.0	0.0	0.0	0.0	63.0	69.3	0.0	0.0	53.6	58.9	0.0	0.0	82.8	125.0	0.0	0.0	-29.2	-66.1	0.0	0.0
6+400.000	6+425.000	0.0	36.4	0.0	0.0	0.0	0.0	0.0	0.0	0.0	0.0	0.0	0.0	0.0	0.0	0.0	0.0	0.0	36.4	0.0	0.0	0.0	30.9	0.0	0.0	168.8	235.5	0.0	0.0	-168.8	-204.6	0.0	0.0
6+425.000	6+450.000	0.0	35.6	0.0	0.0	0.0	0.0	0.0	0.0	0.0	0.0	0.0	0.0	0.0	0.0	0.0	0.0	0.0	35.6	0.0	0.0	0.0	30.3	0.0	0.0	227.6	348.8	0.0	0.0	-227.6	-318.5	0.0	0.0
6+450.000	6+475.000	0.0	34.4	0.0	0.0	0.0	0.0	0.0	0.0	0.0	0.0	0.0	0.0	0.0	0.0	0.0	0.0	0.0	34.4	0.0	0.0	0.0	29.2	0.0	0.0	301.6	544.8	0.0	0.0	-301.6	-515.5	0.0	0.0
6+475.000	6+500.000	0.0	33.6	0.0	0.0	0.0	0.0	0.0	0.0	0.0	0.0	0.0	0.0	0.0	0.0	0.0	0.0	0.0	33.6	0.0	0.0	0.0	28.6	0.0	0.0	161.3	650.6	0.0	0.0	-161.3	-622.0	0.0	0.0
6+500.000	6+525.000	0.0	33.9	0.0	0.0	0.0	0.0	0.0	0.0	0.0	0.0	0.0	0.0	0.0	0.0	0.0	0.0	0.0	33.9	0.0	0.0	0.0	28.8	0.0	0.0	165.9	733.5	0.0	0.0	-165.9	-704.7	0.0	0.0
6+525.000	6+550.000	0.0	34.5	0.0	0.0	0.0	0.0	0.0	0.0	0.0	0.0	0.0	0.0	0.0	0.0	0.0	0.0	0.0	34.5	0.0	0.0	0.0	29.3	0.0	0.0	506.8	809.4	0.0	0.0	-506.8	-780.1	0.0	0.0
6+550.000	6+575.000	0.0	34.5	0.0	0.0	0.0	0.0	0.0	0.0	0.0	0.0	0.0	0.0	0.0	0.0	0.0	0.0	0.0	34.5	0.0	0.0	0.0	29.3	0.0	0.0	560.8	904.5	0.0	0.0	-560.8	-875.2	0.0	0.0
6+575.000	6+600.000	0.0	34.0	0.0	0.0	0.0	0.0	0.0	0.0	0.0	0.0	0.0	0.0	0.0	0.0	0.0	0.0	0.0	34.0	0.0	0.0	0.0	28.9	0.0	0.0	466.0	1044.8	0.0	0.0	-466.0	-1015.9	0.0	0.0
6+600.000	6+625.000	0.0	33.5	0.0	0.0	0.0	0.0	0.0	0.0	0.0	0.0	0.0	0.0	0.0	0.0	0.0	0.0	0.0	33.5	0.0	0.0	0.0	28.5	0.0	0.0	519.6	1175.5	0.0	0.0	-519.6	-1147.0	0.0	0.0
6+625.000	6+650.000	3.8	33.0	0.0	0.0	0.0	0.0	0.0	0.0	0.0	0.0	0.0	0.0	0.0	0.0	0.0	0.0	3.8	33.0	0.0	0.0	3.2	28.1	0.0	0.0	560.4	1267.1	0.0	0.0	-557.2	-1239.1	0.0	0.0
6+650.000	6+675.000	3.8	32.5	0.0	0.0	0.0	0.0	0.0	0.0	0.0	0.0	0.0	0.0	0.0	0.0	0.0	0.0	3.8	32.5	0.0	0.0	3.2	27.6	0.0	0.0	584.3	1325.5	0.0	0.0	-581.1	-1297.9	0.0	0.0
6+675.000	6+700.000	0.0	32.0	0.0	0.0	0.0	0.0	0.0	0.0	0.0	0.0	0.0	0.0	0.0	0.0	0.0	0.0	0.0	32.0	0.0	0.0	0.0	27.2	0.0	0.0	1019.3	1345.9	0.0	0.0	-1019.3	-1318.7	0.0	0.0
6+700.000	6+725.000	0.0	31.5	0.0	0.0	0.0	0.0	0.0	0.0	0.0	0.0	0.0	0.0	0.0	0.0	0.0	0.0	0.0	31.5	0.0	0.0	0.0	26.8	0.0	0.0	1456.4	1320.4	0.0	0.0	-1456.4	-1293.6	0.0	0.0
6+725.000	6+750.000	0.0	15.6	0.0	0.0	0.0	0.0	0.0	0.0	0.0	0.0	0.0	0.0	0.0	0.0	0.0	0.0	0.0	15.6	0.0	0.0	0.0	13.3	0.0	0.0	734.5	650.9	0.0	0.0	-734.5	-637.6	0.0	0.0
6+750.000	6+775.000	0.0	0.0	0.0	0.0	0.0	0.0	0.0	0.0	0.0	0.0	0.0	0.0	0.0	0.0	0.0	0.0	0.0	0.0	0.0	0.0	0.0	0.0	0.0	0.0	0.0	0.0	0.0	0.0	0.0	0.0	0.0	0.0
6+775.000	6+800.000	0.0	0.0	0.0	0.0	0.0	0.0	0.0	0.0	0.0	0.0	0.0	0.0	0.0	0.0	0.0	0.0	0.0	0.0	0.0	0.0	0.0	0.0	0.0	0.0	0.0	0.0	0.0	0.0	0.0	0.0	0.0	0.0
6+800.000	6+814.721	0.0	0.0	0.0	0.0	0.0	0.0	0.0	0.0	0.0	0.0	0.0	0.0	0.0	0.0	0.0	0.0	0.0	0.0	0.0	0.0	0.0	0.0	0.0	0.0	392.5	354.7	0.0	0.0	-392.5	-354.7	0.0	0.0
6+814.721		0.0	0.0	0.0	0.0	0.0	0.0	0.0	0.0	0.0	0.0	0.0	0.0	0.0	0.0	0.0	0.0	0.0	0.0	0.0	0.0	0.0	0.0	0.0	0.0	0.0	0.0	0.0	0.0	0.0	0.0	0.0	0.0

NOTES:

1. SEE STRUCTURAL PLANS FOR STRUCTURE EXCAVATION LOCATIONS AND TOTALS.

REVISIONS	
NAME	DATE
1 KV	1/4/06

ILLINOIS DEPARTMENT OF TRANSPORTATION
F.A.I. ROUTE 80/94 (KINGERY EXPRESSWAY)
EB & WB INSIDE LANES (MAINLINE) CONSTRUCTION
COOK COUNTY

SCHEDULE OF QUANTITIES
X

SCALE: NONE
DATE: 1/4/06
DRAWN BY: RJS
CHECKED BY: DH

TENG
TENG & ASSOCIATES, INC.
ENGINEERS/ARCHITECTS/PLANNERS
CHICAGO, ILLINOIS

..\SCI7R012A.DGN, ..\SCI7R012A.DGN, ..\AB990012A.DGN
12-30-2005, 10:57:47 T:\DOCUMENT\1931750I\CIVIL\DGN\SCI7OII2A.DGN
VARSHNKZ

F.A.I. RTE.	SECTION	COUNTY	TOTAL SHEETS	SHEET NO.
80/94	*	COOK	631	33
STA.		TO STA.		
FED. ROAD DIST. NO.		ILLINOIS	FED. AID PROJECT	

* (2425 & 2626) R-2 CONTRACT NO. 62111

SCHEDULE OF QUANTITIES

RAILROAD AVENUE & ACCIDENT INVESTIGATION SITE EARTHWORK

STATION	TO STATION	EARTH EXCAVATION				REMOVAL AND DISPOSAL OF UNSUITABLE MATERIAL				STRUCTURE EXCAVATION				SPOIL FROM STRUCTURE EXCAVATION			
		PH3 ST1 CUM	PH3 ST2 CUM	PH3 ST3 CUM	PH3 ST4 CUM	PH3 ST1 CUM	PH3 ST2 CUM	PH3 ST3 CUM	PH3 ST4 CUM	PH3 ST1 CUM	PH3 ST2 CUM	PH3 ST3 CUM	PH3 ST4 CUM	PH3 ST1 CUM	PH3 ST2 CUM	PH3 ST3 CUM	
RAILROAD AVE.																	
300+010.360	300+025.000	0.0	297.1	0.0	0.0	0.0	0.0	0.0	0.0	0.0	61.9	0.0	0.0	0.0	32.2	0.0	0.0
300+025.000	300+036.121	0.0	130.6	0.0	0.0	0.0	0.0	0.0	0.0	0.0	93.9	0.0	0.0	0.0	49.0	0.0	0.0
300+036.121	300+050.000	0.0	1001.8	0.0	0.0	0.0	0.0	0.0	0.0	0.0	156.0	0.0	0.0	0.0	63.1	0.0	0.0
300+050.000	300+075.000	227.1	1661.2	0.0	0.0	0.0	0.0	0.0	0.0	112.0	175.8	0.0	0.0	57.0	58.6	0.0	0.0
300+075.000	300+077.160	32.5	0.0	0.0	0.0	0.0	0.0	0.0	0.0	18.5	0.0	0.0	0.0	9.6	0.0	0.0	0.0
300+077.160	300+100.000	429.0	0.0	0.0	0.0	0.0	0.0	0.0	0.0	92.8	0.0	0.0	0.0	49.3	0.0	0.0	0.0
300+100.000	300+104.925	126.2	0.0	0.0	0.0	0.0	0.0	0.0	0.0	0.0	0.0	0.0	0.0	0.0	0.0	0.0	0.0
300+104.925		0.0	0.0	0.0	0.0	0.0	0.0	0.0	0.0	0.0	0.0	0.0	0.0	0.0	0.0	0.0	0.0
ACCIDENT INVESTIGATION SITE WB I-94																	
32+583.309	32+593.989	0.0	0.0	4.2	0.0	0.0	0.0	0.0	0.0	0.0	0.0	0.0	0.0	0.0	0.0	0.0	0.0
32+593.989	32+600.000	0.0	0.0	4.4	0.0	0.0	0.0	0.0	0.0	0.0	0.0	0.0	0.0	0.0	0.0	0.0	0.0
32+600.000	32+625.000	0.0	0.0	35.1	0.0	0.0	0.0	0.0	0.0	0.0	0.0	0.0	0.0	0.0	0.0	0.0	0.0
32+625.000	32+628.519	0.0	0.0	8.3	0.0	0.0	0.0	0.0	0.0	0.0	0.0	0.0	0.0	0.0	0.0	0.0	0.0
32+628.519	32+650.000	0.0	0.0	50.2	0.0	0.0	0.0	0.0	0.0	0.0	0.0	0.0	0.0	0.0	0.0	0.0	0.0
32+650.000	32+675.000	0.0	0.0	37.1	0.0	0.0	0.0	0.0	0.0	0.0	0.0	0.0	0.0	0.0	0.0	0.0	0.0
32+675.000	32+689.077	0.0	0.0	19.0	0.0	0.0	0.0	0.0	0.0	0.0	0.0	0.0	0.0	0.0	0.0	0.0	0.0
32+689.077	32+700.000	0.0	0.0	17.7	0.0	0.0	0.0	0.0	0.0	0.0	0.0	0.0	0.0	0.0	0.0	0.0	0.0
32+700.000	32+721.585	0.0	0.0	31.4	0.0	0.0	0.0	0.0	0.0	0.0	0.0	0.0	0.0	0.0	0.0	0.0	0.0
32+721.585	32+725.000	0.0	0.0	4.1	0.0	0.0	0.0	0.0	0.0	0.0	0.0	0.0	0.0	0.0	0.0	0.0	0.0
32+725.000	32+750.000	0.0	0.0	37.1	0.0	0.0	0.0	0.0	0.0	0.0	0.0	0.0	0.0	0.0	0.0	0.0	0.0
32+750.000	32+761.860	0.0	0.0	19.5	0.0	0.0	0.0	0.0	0.0	0.0	0.0	0.0	0.0	0.0	0.0	0.0	0.0
32+761.860		0.0	0.0	0.0	0.0	0.0	0.0	0.0	0.0	0.0	0.0	0.0	0.0	0.0	0.0	0.0	0.0
ACCIDENT INVESTIGATION SITE EB CD ROAD																	
190+569.562	190+575.000	0.0	0.0	4.1	0.0	0.0	0.0	0.0	0.0	0.0	0.0	0.0	0.0	0.0	0.0	0.0	0.0
190+575.000	190+579.790	0.0	0.0	3.8	0.0	0.0	0.0	0.0	0.0	0.0	0.0	0.0	0.0	0.0	0.0	0.0	0.0
190+579.790	190+600.000	0.0	0.0	20.9	0.0	0.0	0.0	0.0	0.0	0.0	0.0	0.0	0.0	0.0	0.0	0.0	0.0
190+600.000	190+602.613	0.0	0.0	3.5	0.0	0.0	0.0	0.0	0.0	0.0	0.0	0.0	0.0	0.0	0.0	0.0	0.0
190+602.613	190+625.000	0.0	0.0	33.1	0.0	0.0	0.0	0.0	0.0	0.0	0.0	0.0	0.0	0.0	0.0	0.0	0.0
190+625.000	190+642.434	0.0	0.0	25.5	0.0	0.0	0.0	0.0	0.0	0.0	0.0	0.0	0.0	0.0	0.0	0.0	0.0
190+642.434	190+650.000	0.0	0.0	10.5	0.0	0.0	0.0	0.0	0.0	0.0	0.0	0.0	0.0	0.0	0.0	0.0	0.0
190+650.000	190+673.143	0.0	0.0	20.0	0.0	0.0	0.0	0.0	0.0	0.0	0.0	0.0	0.0	0.0	0.0	0.0	0.0
190+673.143	190+675.000	0.0	0.0	0.7	0.0	0.0	0.0	0.0	0.0	0.0	0.0	0.0	0.0	0.0	0.0	0.0	0.0
190+675.000	190+683.144	0.0	0.0	2.8	0.0	0.0	0.0	0.0	0.0	0.0	0.0	0.0	0.0	0.0	0.0	0.0	0.0
190+683.144		0.0	0.0	0.0	0.0	0.0	0.0	0.0	0.0	0.0	0.0	0.0	0.0	0.0	0.0	0.0	0.0

STATION	TO STATION	TOTAL SUITABLE EXCAVATION				EXCAVATION TO BE USED IN EMBANKMENT (15% SHRINKAGE)				EMBANKMENT				EARTHWORK BALANCE WASTE (+) OR SHORTAGE (-)			
		PH3 ST1 CUM	PH3 ST2 CUM	PH3 ST3 CUM	PH3 ST4 CUM	PH3 ST1 CUM	PH3 ST2 CUM	PH3 ST3 CUM	PH3 ST4 CUM	PH3 ST1 CUM	PH3 ST2 CUM	PH3 ST3 CUM	PH3 ST4 CUM	PH3 ST1 CUM	PH3 ST2 CUM	PH3 ST3 CUM	PH3 ST4 CUM
RAILROAD AVE.																	
300+010.360	300+025.000	0.0	329.3	0.0	0.0	0.0	279.9	0.0	0.0	0.0	111.6	0.0	0.0	0.0	168.3	0.0	0.0
300+025.000	300+036.121	0.0	179.6	0.0	0.0	0.0	152.6	0.0	0.0	0.0	243.9	0.0	0.0	0.0	-91.2	0.0	0.0
300+036.121	300+050.000	0.0	1064.9	0.0	0.0	0.0	905.2	0.0	0.0	0.0	359.6	0.0	0.0	0.0	545.6	0.0	0.0
300+050.000	300+075.000	284.1	1719.8	0.0	0.0	241.5	1461.8	0.0	0.0	334.9	290.1	0.0	0.0	-93.4	1171.7	0.0	0.0
300+075.000	300+077.160	42.1	0.0	0.0	0.0	35.8	0.0	0.0	0.0	57.7	0.0	0.0	0.0	-21.9	0.0	0.0	0.0
300+077.160	300+100.000	478.3	0.0	0.0	0.0	406.5	0.0	0.0	0.0	304.5	0.0	0.0	0.0	102.1	0.0	0.0	0.0
300+100.000	300+104.925	126.2	0.0	0.0	0.0	107.2	0.0	0.0	0.0	0.0	0.0	0.0	0.0	107.2	0.0	0.0	0.0
300+104.925		0.0	0.0	0.0	0.0	0.0	0.0	0.0	0.0	0.0	0.0	0.0	0.0	0.0	0.0	0.0	0.0
ACCIDENT INVESTIGATION SITE WB I-94																	
32+583.309	32+593.989	0.0	0.0	4.2	0.0	0.0	0.0	3.5	0.0	0.0	0.0	0.6	0.0	0.0	0.0	2.9	0.0
32+593.989	32+600.000	0.0	0.0	4.4	0.0	0.0	0.0	3.7	0.0	0.0	0.0	0.0	0.0	0.0	0.0	3.7	0.0
32+600.000	32+625.000	0.0	0.0	35.1	0.0	0.0	0.0	29.9	0.0	0.0	0.0	1.8	0.0	0.0	0.0	28.1	0.0
32+625.000	32+628.519	0.0	0.0	8.3	0.0	0.0	0.0	7.0	0.0	0.0	0.0	0.5	0.0	0.0	0.0	6.5	0.0
32+628.519	32+650.000	0.0	0.0	50.2	0.0	0.0	0.0	42.6	0.0	0.0	0.0	15.9	0.0	0.0	0.0	26.7	0.0
32+650.000	32+675.000	0.0	0.0	37.1	0.0	0.0	0.0	31.6	0.0	0.0	0.0	68.1	0.0	0.0	0.0	-36.6	0.0
32+675.000	32+689.077	0.0	0.0	19.0	0.0	0.0	0.0	16.2	0.0	0.0	0.0	69.2	0.0	0.0	0.0	-53.0	0.0
32+689.077	32+700.000	0.0	0.0	17.7	0.0	0.0	0.0	15.1	0.0	0.0	0.0	52.5	0.0	0.0	0.0	-37.5	0.0
32+700.000	32+721.585	0.0	0.0	31.4	0.0	0.0	0.0	26.7	0.0	0.0	0.0	45.3	0.0	0.0	0.0	-18.6	0.0
32+721.585	32+725.000	0.0	0.0	4.1	0.0	0.0	0.0	3.5	0.0	0.0	0.0	0.9	0.0	0.0	0.0	2.5	0.0
32+725.000	32+750.000	0.0	0.0	37.1	0.0	0.0	0.0	31.6	0.0	0.0	0.0	3.6	0.0	0.0	0.0	27.9	0.0
32+750.000	32+761.860	0.0	0.0	19.5	0.0	0.0	0.0	16.5	0.0	0.0	0.0	0.2	0.0	0.0	0.0	16.3	0.0
32+761.860		0.0	0.0	0.0	0.0	0.0	0.0	0.0	0.0	0.0	0.0	0.0	0.0	0.0	0.0	0.0	0.0
ACCIDENT INVESTIGATION SITE EB CD ROAD																	
190+569.562	190+575.000	0.0	0.0	4.1	0.0	0.0	0.0	3.5	0.0	0.0	0.0	0.1	0.0	0.0	0.0	3.4	0.0
190+575.000	190+579.790	0.0	0.0	3.8	0.0	0.0	0.0	3.3	0.0	0.0	0.0	0.1	0.0	0.0	0.0	3.2	0.0
190+579.790	190+600.000	0.0	0.0	20.9	0.0	0.0	0.0	17.8	0.0	0.0	0.0	8.2	0.0	0.0	0.0	9.6	0.0
190+600.000	190+602.613	0.0	0.0	3.5	0.0	0.0	0.0	3.0	0.0	0.0	0.0	1.9	0.0	0.0	0.0	1.1	0.0
190+602.613	190+625.000	0.0	0.0	33.1	0.0	0.0	0.0	28.2	0.0	0.0	0.0	34.7	0.0	0.0	0.0	-6.5	0.0
190+625.000	190+642.434	0.0	0.0	25.5	0.0	0.0	0.0	21.6	0.0	0.0	0.0	60.5	0.0	0.0	0.0	-38.9	0.0
190+642.434	190+650.000	0.0	0.0	10.5	0.0	0.0	0.0	8.9	0.0	0.0	0.0	27.3	0.0	0.0	0.0	-18.4	0.0
190+650.000	190+673.143	0.0	0.0	20.0	0.0	0.0	0.0	17.0	0.0	0.0	0.0	31.1	0.0	0.0	0.0	-14.1	0.0
190+673.143	190+675.000	0.0	0.0	0.7	0.0	0.0	0.0	0.6	0.0	0.0	0.0	0.0	0.0	0.0	0.0	0.6	0.0
190+675.000	190+683.144	0.0	0.0	2.8	0.0	0.0	0.0	2.4	0.0	0.0	0.0	0.0	0.0	0.0	0.0	2.4	0.0
190+683.144		0.0	0.0	0.0	0.0	0.0	0.0	0.0	0.0	0.0	0.0	0.0	0.0	0.0	0.0	0.0	0.0

EARTHWORK TOTALS AND BALANCE

LOCATION	EARTH EXCAVATION				REMOVAL AND DISPOSAL OF UNSUITABLE MATERIAL				STRUCTURE EXCAVATION				SPOIL FROM STRUCTURE EXCAVATION			
	PH3 ST1 CUM	PH3 ST2 CUM	PH3 ST3 CUM	PH3 ST4 CUM	PH3 ST1 CUM	PH3 ST2 CUM	PH3 ST3 CUM	PH3 ST4 CUM	PH3 ST1 CUM	PH3 ST2 CUM	PH3 ST3 CUM	PH3 ST4 CUM	PH3 ST1 CUM	PH3 ST2 CUM	PH3 ST3 CUM	PH3 ST4 CUM
I-80/94	12544.6	16578.4	2812.0	629.8	0.0	0.0	0.0	0.0	403.3	0.0	0.0	0.0	321.5	0.0	0.0	0.0
BURNHAM AVENUE	724.3	814.0	0.0	0.0	301.4	290.5	0.0	0.0	164.5	236.1	0.0	0.0	86.3	110.3	0.0	0.0
BERNICE AVENUE	94.5	45.3	0.0	0.0	0.0	105.0	0.0	0.0	0.0	0.0	0.0	0.0	0.0	0.0	0.0	0.0
175TH STREET	60.8	378.2	0.0	0.0	98.3	549.4	0.0	0.0	1844.7	0.0	0.0	0.0	693.4	0.0	0.0	0.0
RAILROAD AVENUE	814.7	3090.6	0.0	0.0	0.0	0.0	0.0	0.0	223.3	487.5	0.0	0.0	115.9	203.0	0.0	0.0
AIS WB I-94	0.0	0.0	268.0	0.0	0.0	0.0	0.0	0.0	0.0	0.0	0.0	0.0	0.0	0.0	0.0	0.0
AIS EB CD ROAD	0.0	0.0	125.0	0.0	0.0	0.0	0.0	0.0	0.0	0.0	0.0	0.0	0.0	0.0	0.0	0.0
STAGE TOTALS	14239.0	20906.6	3205.0	629.8	399.7	944.9	0.0	0.0	2635.8	723.6	0.0	0.0	1217.1	313.2	0.0	0.0
TOTALS	38980.4	(SEE NOTE 3)			1344.7				3359.4	(FOR INFORMATION ONLY) (SEE NOTE 1)			1530.3			

LOCATION	TOTAL SUITABLE EXCAVATION				EXCAVATION TO BE USED IN EMBANKMENT (15% SHRINKAGE)				EMBANKMENT				EARTHWORK BALANCE WASTE (+) OR SHORTAGE (-)			
	PH3 ST1 CUM	PH3 ST2 CUM	PH3 ST3 CUM	PH3 ST4 CUM	PH3 ST1 CUM	PH3 ST2 CUM	PH3 ST3 CUM	PH3 ST4 CUM	PH3 ST1 CUM	PH3 ST2 CUM	PH3 ST3 CUM	PH3 ST4 CUM	PH3 ST1 CUM	PH3 ST2 CUM	PH3 ST3 CUM	PH3 ST4 CUM
I-80/94	12866.1	16578.4	2812.0	629.8	10936.2	14091.7	2390.2	535.3	40754.1	23719.8	422.6	22.0	-29817.9	-9628.1	1967.6	513.3
BURNHAM AVENUE	810.6	924.2	0.0	0.0	689.0	785.6	0.0	0.0	2841.5	2070.9	0.0	0.0	-2152.5	-1285.3	0.0	0.0
BERNICE AVENUE	94.5	45.3	0.0	0.0	80.3	38.5	0.0	0.0	159.0	218.5	0.0	0.0	-78.7	-180.0	0.0	0.0
175TH STREET	754.2	378.2	0.0	0.0	641.0	321.5	0.0	0.0	215.6	269.2	0.0	0.0	425.5	52.3	0.0	0.0
RAILROAD AVENUE	930.7	3293.6	0.0	0.0	791.1	2799.6	0.0	0.0	697.1	1005.2	0.0	0.0	94.0	1794.3	0.0	0.0
AIS WB I-94	0.0	0.0	268.0	0.0	0.0	0.0	227.8	0.0	0.0	0.0	258.8	0.0	0.0	0.0	-31.0	0.0
AIS EB CD ROAD	0.0	0.0	125.0	0.0	0.0	0.0	106.2	0.0	0.0	0.0	163.9	0.0	0.0	0.0	-57.6	0.0
STAGE TOTALS	15456.1	21219.8	3205.0	629.8	13137.6	18036.8	2724.3	535.3	44667.3	27283.7	845.3	22.0	-31529.7	9246.8	1879.0	513.3
TOTALS	40510.7				34434.1				72818.3				-40776.5	(SEE NOTE 2)		

NOTES:

1. SEE STRUCTURAL PLANS FOR STRUCTURE EXCAVATION LOCATIONS AND TOTALS.
2. TOTAL REQUIRED EMBANKMENT EQUALS THE BALANCE OF STAGE I AND STAGE 2.
3. REMOVAL OF SURCHARGE AS EARTH EXCAVATION INCLUDED IN PHASE 3 STAGE 3 TOTAL.

REVISIONS	
NAME	DATE
1 KV	1/4/06

ILLINOIS DEPARTMENT OF TRANSPORTATION
F.A.I. ROUTE 80/94 (KINGERY EXPRESSWAY)
EB & WB INSIDE LANES (MAINLINE) CONSTRUCTION
COOK COUNTY

SCHEDULE OF QUANTITIES XII

SCALE: NONE
DATE: 1/4/06

DRAWN BY: RJS
CHECKED BY: DH

TENG
TENG & ASSOCIATES, INC.
ENGINEERS/ARCHITECTS/PLANNERS
CHICAGO, ILLINOIS

..\SCITR02A.DGN,..\SCITR02A.DGN,..\SCITR02A.DGN,..\SCITR02A.DGN,..\AB99002A.DGN
12-30-2005,10:58:28 T:\DOCUMENT\93750\CIVIL\DGN\SCITR02A.DGN
1 2 3 4 5 6 7 8 9 10 11 12 13 14 15 16 17 18 19 20 21 22 23 24 25 26 27 28 29 30 31 32 33 34 35 36 37 38 39 40 41 42 43 44 45 46 47 48 49 50 51 52 53 54 55 56 57 58 59 60 61 62 63
VARSHNKZ

F.A.I. RTE.	SECTION	COUNTY	TOTAL SHEETS	SHEET NO.
80/94	*	COOK	631	40
STA.		TO STA.		
FED. ROAD DIST. NO.		ILLINOIS	FED. AID PROJECT	

* (2425 & 2626) R-2 CONTRACT NO. 62111

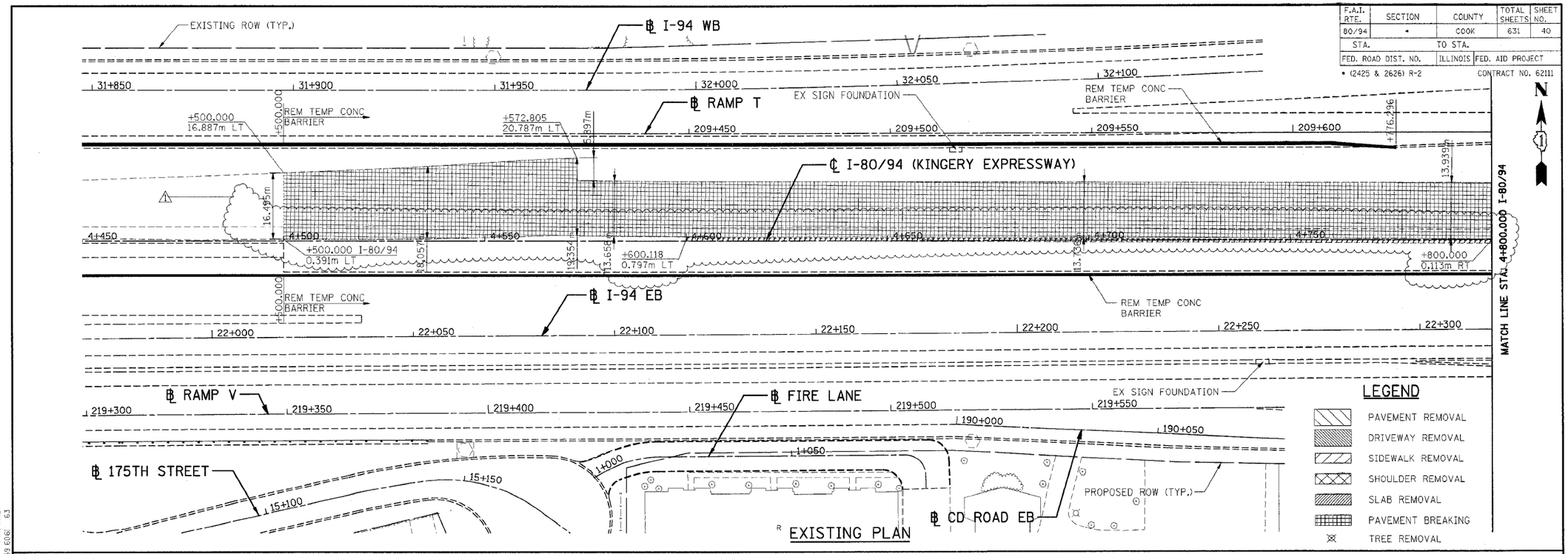

EXISTING PLAN

LEGEND

- PAVEMENT REMOVAL
- DRIVEWAY REMOVAL
- SIDEWALK REMOVAL
- SHOULDER REMOVAL
- SLAB REMOVAL
- PAVEMENT BREAKING
- TREE REMOVAL

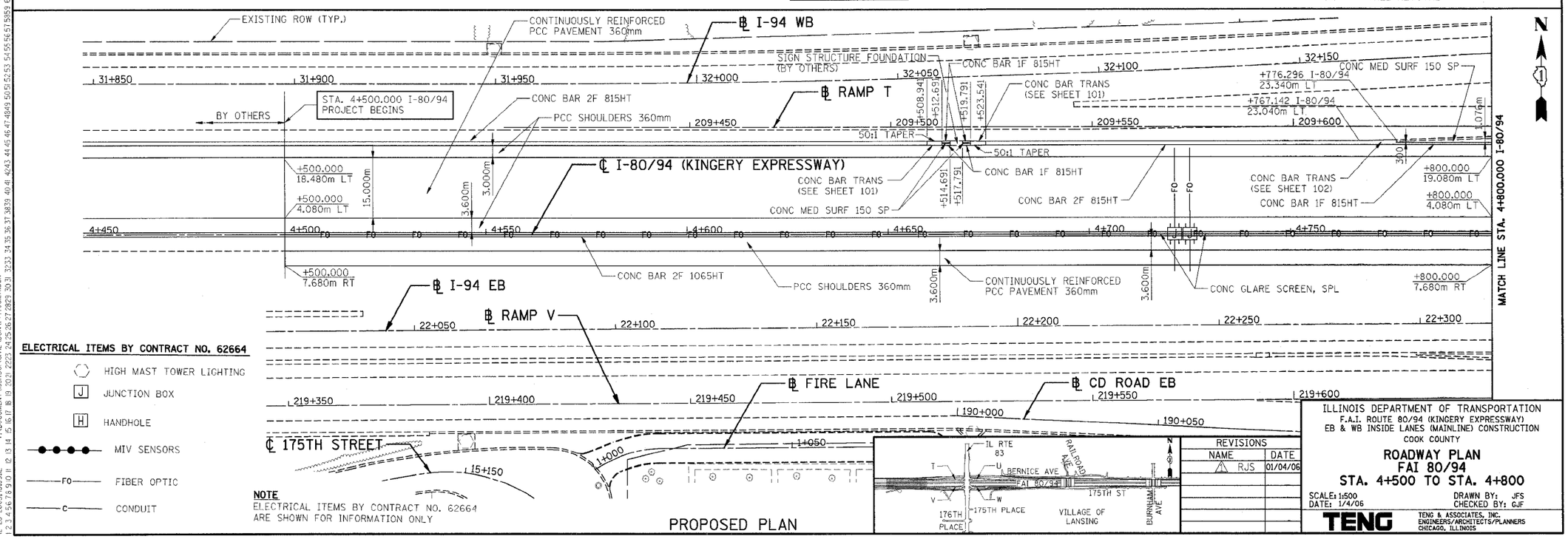

PROPOSED PLAN

ELECTRICAL ITEMS BY CONTRACT NO. 62664

- HIGH MAST TOWER LIGHTING
- JUNCTION BOX
- HANDHOLE
- MIV SENSORS
- FIBER OPTIC
- CONDUIT

NOTE
ELECTRICAL ITEMS BY CONTRACT NO. 62664 ARE SHOWN FOR INFORMATION ONLY

REVISIONS	
NAME	DATE
RJS	01/04/06

ILLINOIS DEPARTMENT OF TRANSPORTATION
F.A.I. ROUTE 80/94 (KINGERY EXPRESSWAY)
EB & WB INSIDE LANES (MAINLINE) CONSTRUCTION
COOK COUNTY

ROADWAY PLAN
FAI 80/94
STA. 4+500 TO STA. 4+800

SCALE: 1:500 DRAWN BY: JFS
DATE: 1/4/06 CHECKED BY: GJF

TENG
TENG & ASSOCIATES, INC.
ENGINEERS/ARCHITECTS/PLANNERS
CHICAGO, ILLINOIS

..\VR70022A.DGN,..\VR70022A.DGN,..\VR70022A.DGN,..\VR70022A.DGN,..\VR70032A.DGN,..\VR99002A.DGN,..\VR99002A.DGN,..\VR70022A.DGN,..\VR99002A.DGN,..\VR70032A.DGN,..\VR70022A.DGN,..\VR70022A.DGN,..\VR70022A.DGN,..\VR70022A.DGN,..\VR70022A.DGN,..\VR70022A.DGN
12-28-2005,15:59:42 T:\DOCUMENT\93150\CIVIL\DGN\PIT70002A.DGN VARGHWZ
1 2 3 4 5 6 7 8 9 0 11 12 13 14 15 16 17 18 19 20 21 22 23 24 25 26 27 28 29 30 31 32 33 34 35 36 37 38 39 40 41 42 43 44 45 46 47 48 49 50 51 52 53 54 55 56 57 58 59 60 61 62 63

F.A.I. RTE.	SECTION	COUNTY	TOTAL SHEETS	SHEET NO.
80/94	*	COOK	631	41
STA.		TO STA.		
FED. ROAD DIST. NO.		ILLINOIS	FED. AID PROJECT	

* (2425 & 2626) R-2

CONTRACT NO. 62111

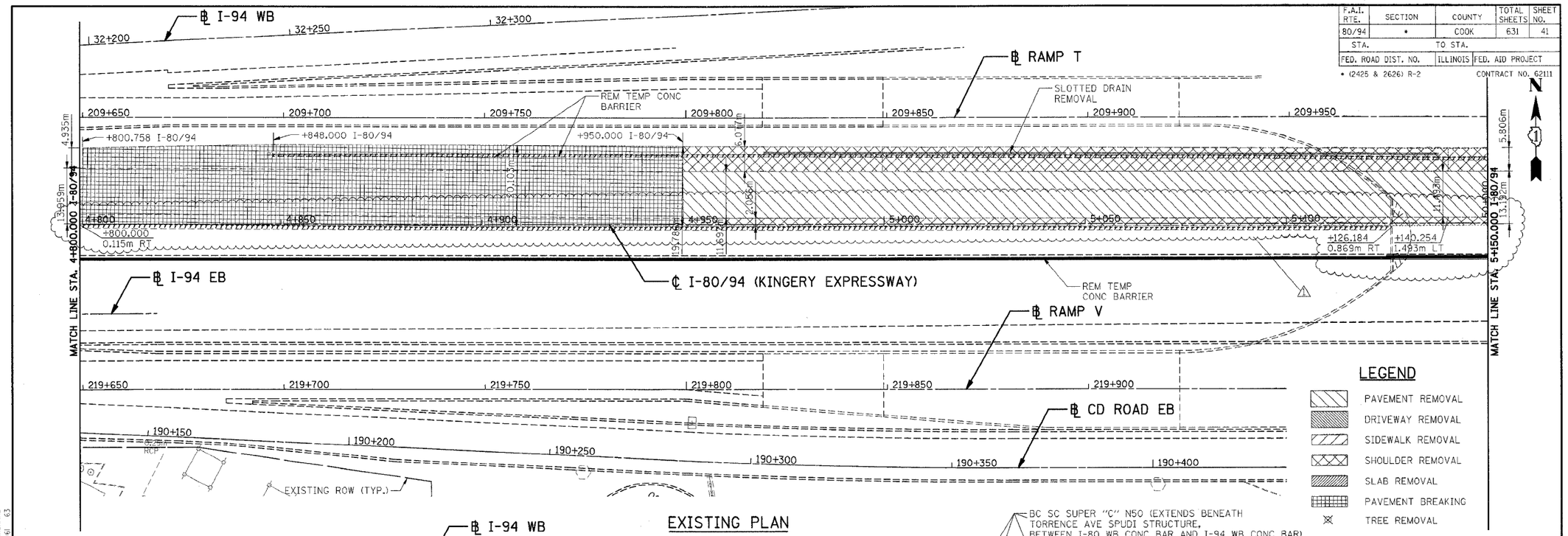

EXISTING PLAN

LEGEND

- PAVEMENT REMOVAL
- DRIVEWAY REMOVAL
- SIDEWALK REMOVAL
- SHOULDER REMOVAL
- SLAB REMOVAL
- PAVEMENT BREAKING
- TREE REMOVAL

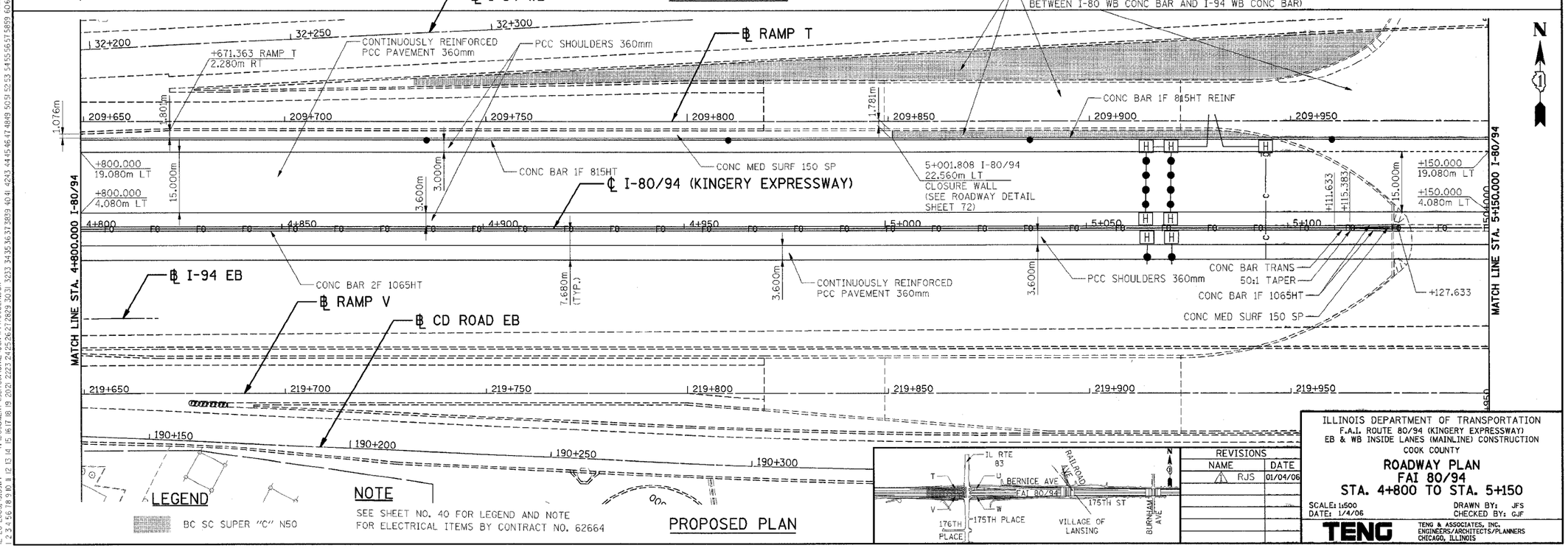

PROPOSED PLAN

LEGEND

BC SC SUPER "C" N50

NOTE

SEE SHEET NO. 40 FOR LEGEND AND NOTE FOR ELECTRICAL ITEMS BY CONTRACT NO. 62664

REVISIONS	
NAME	DATE
RJS	01/04/06

ILLINOIS DEPARTMENT OF TRANSPORTATION
F.A.I. ROUTE 80/94 (KINGERY EXPRESSWAY)
EB & WB INSIDE LANES (MAINLINE) CONSTRUCTION
COOK COUNTY

ROADWAY PLAN
FAI 80/94
STA. 4+800 TO STA. 5+150

SCALE: 1:500
DATE: 1/4/06

DRAWN BY: JFS
CHECKED BY: GJF

TENG

TENG & ASSOCIATES, INC.
ENGINEERS/ARCHITECTS/PLANNERS
CHICAGO, ILLINOIS

..\XR76022A.DGN,..\XR76022A.DGN,..\XR76022A.DGN,..\PRT0052A.DGN,..\PRT0052A.DGN,..\PRT0032A.DGN,..\PRT0022A.DGN,..\PRT0022A.DGN,..\PRT0022

F.A.I. RTE.	SECTION	COUNTY	TOTAL SHEETS	SHEET NO.
80/94	*	COOK	631	42
STA.		TO STA.		
FED. ROAD DIST. NO.		ILLINOIS	FED. AID PROJECT	
* (2425 & 2626) R-2			CONTRACT NO. 62111	

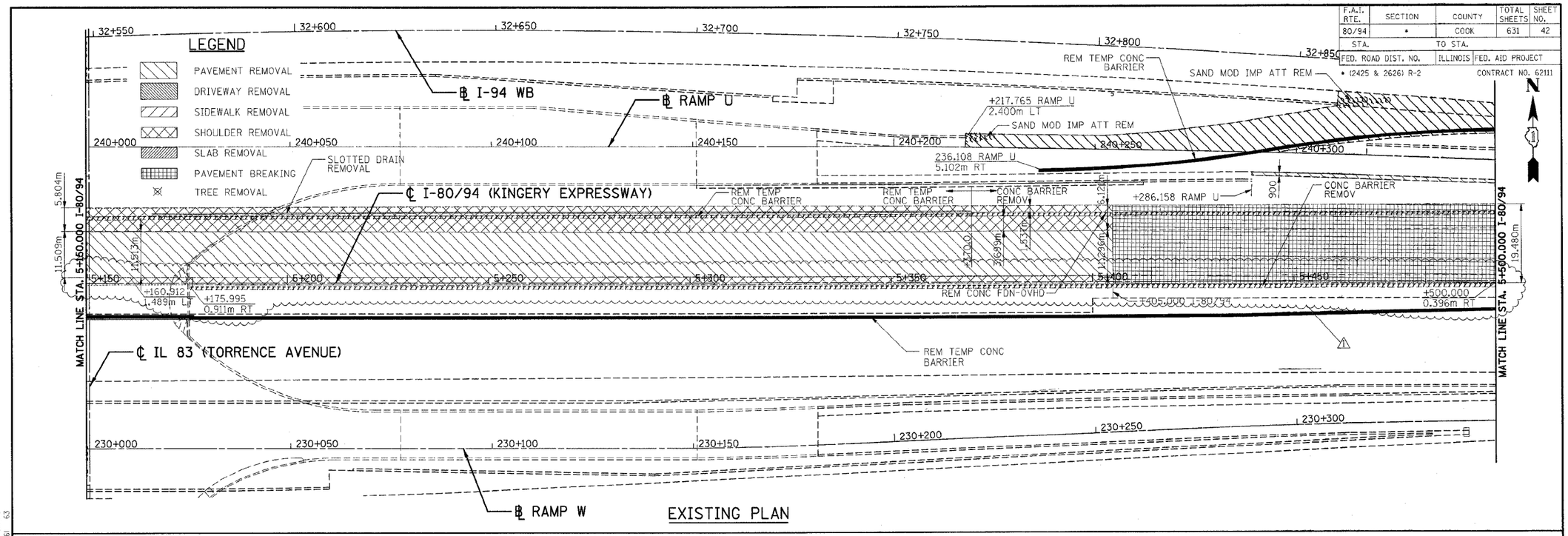

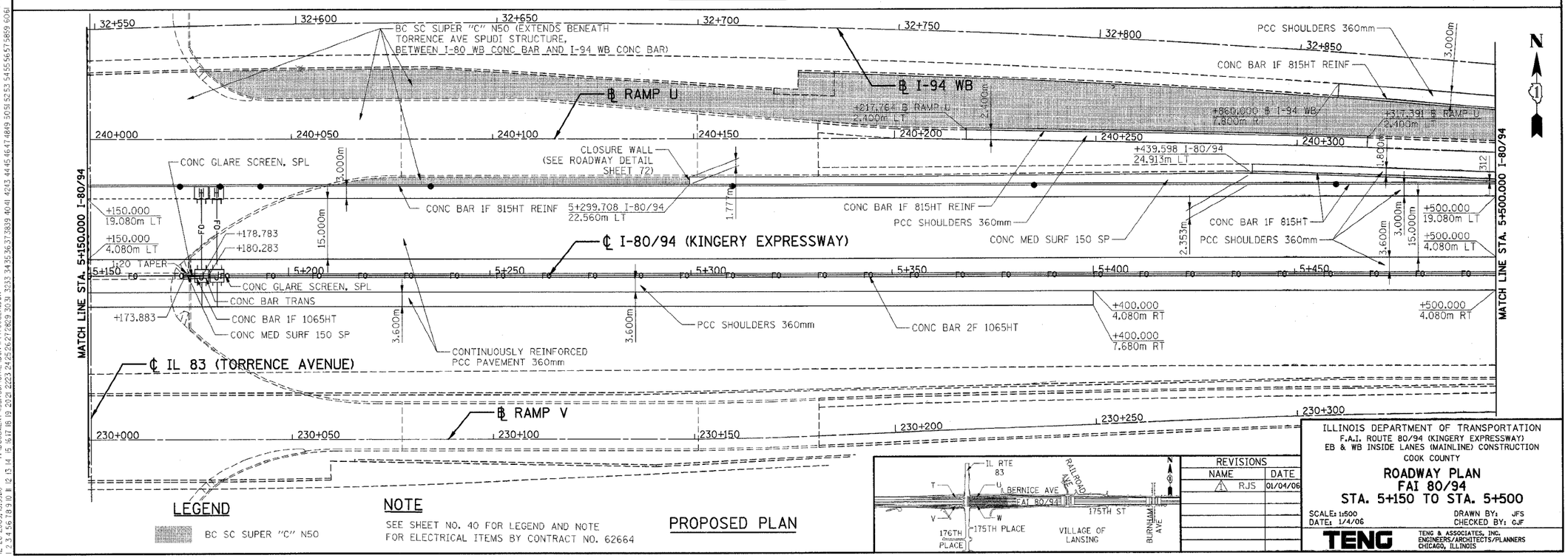

LEGEND

BC SC SUPER "C" N50

NOTE

SEE SHEET NO. 40 FOR LEGEND AND NOTE FOR ELECTRICAL ITEMS BY CONTRACT NO. 62664

REVISIONS		
	NAME	DATE
1	RJS	01/04/06

ILLINOIS DEPARTMENT OF TRANSPORTATION
F.A.I. ROUTE 80/94 (KINGERY EXPRESSWAY)
EB & WB INSIDE LANES (MAINLINE) CONSTRUCTION
COOK COUNTY

ROADWAY PLAN
FAI 80/94
STA. 5+150 TO STA. 5+500

SCALE: 1:500
DATE: 1/4/06
DRAWN BY: JFS
CHECKED BY: GJF

TENG & ASSOCIATES, INC.
ENGINEERS/ARCHITECTS/PLANNERS
CHICAGO, ILLINOIS

..\VRR70022A.DGN,..\VRR70023A.DGN,..\VRR70022A.DGN,..\VRR70022A.DGN,..\VRR70032A.DGN,..\VR99005A.DGN,..\VRR70012A.DGN,..\VRR70012A.DGN,..\PB99001A.DGN,..\AB99001A.DGN,..\VRR70022A.DGN
12-28-2005, 15:59:48 T:\DOCUMENT\93750\CIVIL\DGN\PT70052A.DGN VARSINKZ
1 2 3 4 5 6 7 8 9 10 11 12 13 14 15 16 17 18 19 20 21 22 23 24 25 26 27 28 29 30 31 32 33 34 35 36 37 38 39 40 41 42 43 44 45 46 47 48 49 50 51 52 53 54 55 56 57 58 59 60 61 62 63

F.A.I. RTE.	SECTION	COUNTY	TOTAL SHEETS	SHEET NO.
80/94	*	COOK	631	43
STA.		TO STA.		
FED. ROAD DIST. NO.		ILLINOIS	FED. AID PROJECT	

* (2425 & 2626) R-2 CONTRACT NO. 62111

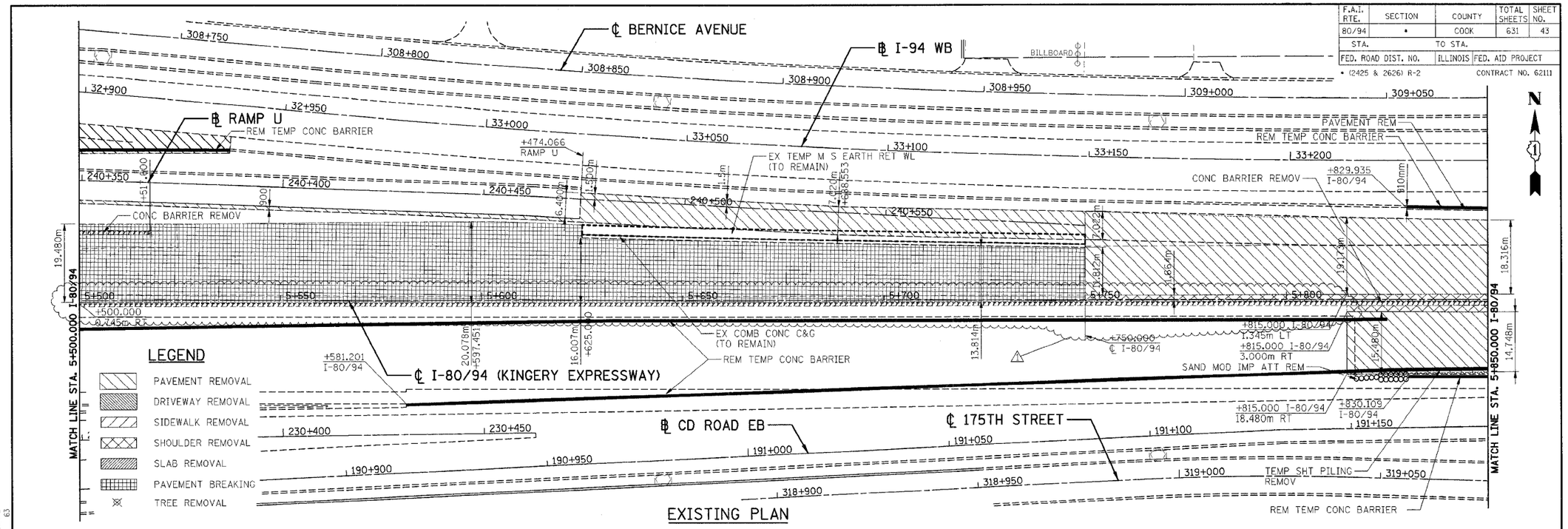

EXISTING PLAN

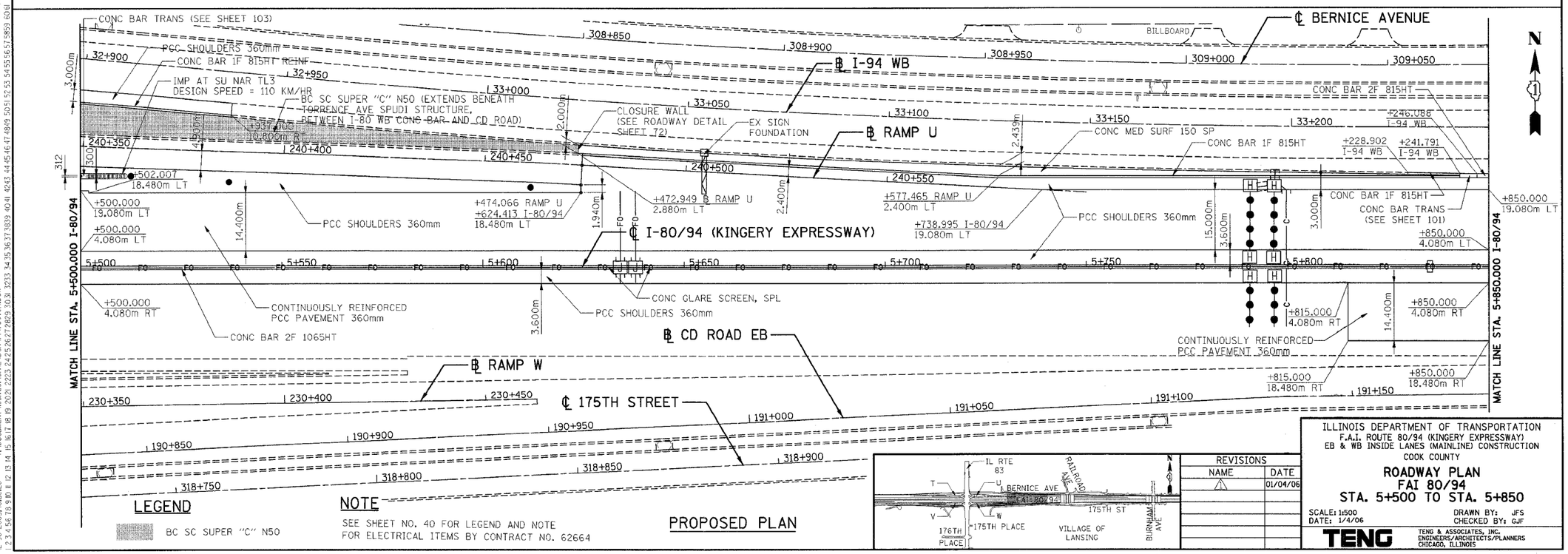

LEGEND

BC SC SUPER "C" N50

NOTE

SEE SHEET NO. 40 FOR LEGEND AND NOTE FOR ELECTRICAL ITEMS BY CONTRACT NO. 62664

PROPOSED PLAN

REVISIONS	
NAME	DATE
1	01/04/06

ILLINOIS DEPARTMENT OF TRANSPORTATION
F.A.I. ROUTE 80/94 (KINGERY EXPRESSWAY)
EB & WB INSIDE LANES (MAINLINE) CONSTRUCTION
COOK COUNTY

ROADWAY PLAN
FAI 80/94
STA. 5+500 TO STA. 5+850

SCALE: 1:500 DRAWN BY: JFS
DATE: 1/4/06 CHECKED BY: GJF

TENG
TENG & ASSOCIATES, INC.
ENGINEERS/ARCHITECTS/PLANNERS
CHICAGO, ILLINOIS

1 REVISED 01/04/2006, RJS

..\HRIT0022A.DGN, ..\HRIT0023A.DGN, ..\HRIT0022A.DGN, ..\HRIT0022A.DGN, ..\HRIT0032A.DGN, ..\PFIT0172A.DGN, ..\PRIT0012A.DGN, ..\PRIT0012A.DGN, ..\PB9990012A.DGN, ..\PB9990012A.DGN, ..\VBIT0022A.DGN
(2-10-2005, 10:56:28 T:\DOCUMENT\93750\CIVIL\DGN\PFIT00174.DGN VARSHNKZ
1 2 3 4 5 6 7 8 9 10 11 12 13 14 15 16 17 18 19 20 21 22 23 24 25 26 27 28 29 30 31 32 33 34 35 36 37 38 39 40 41 42 43 44 45 46 47 48 49 50 51 52 53 54 55 56 57 58 59 60 61 62 63

F.A.I. RTE.	SECTION	COUNTY	TOTAL SHEETS	SHEET NO.
80/94	*	COOK	631	186
STA.		TO STA.		
FED. ROAD DIST. NO.		ILLINOIS	FED. AID PROJECT	

* (2425 & 2626) R-2

CONTRACT NO. 62111

N

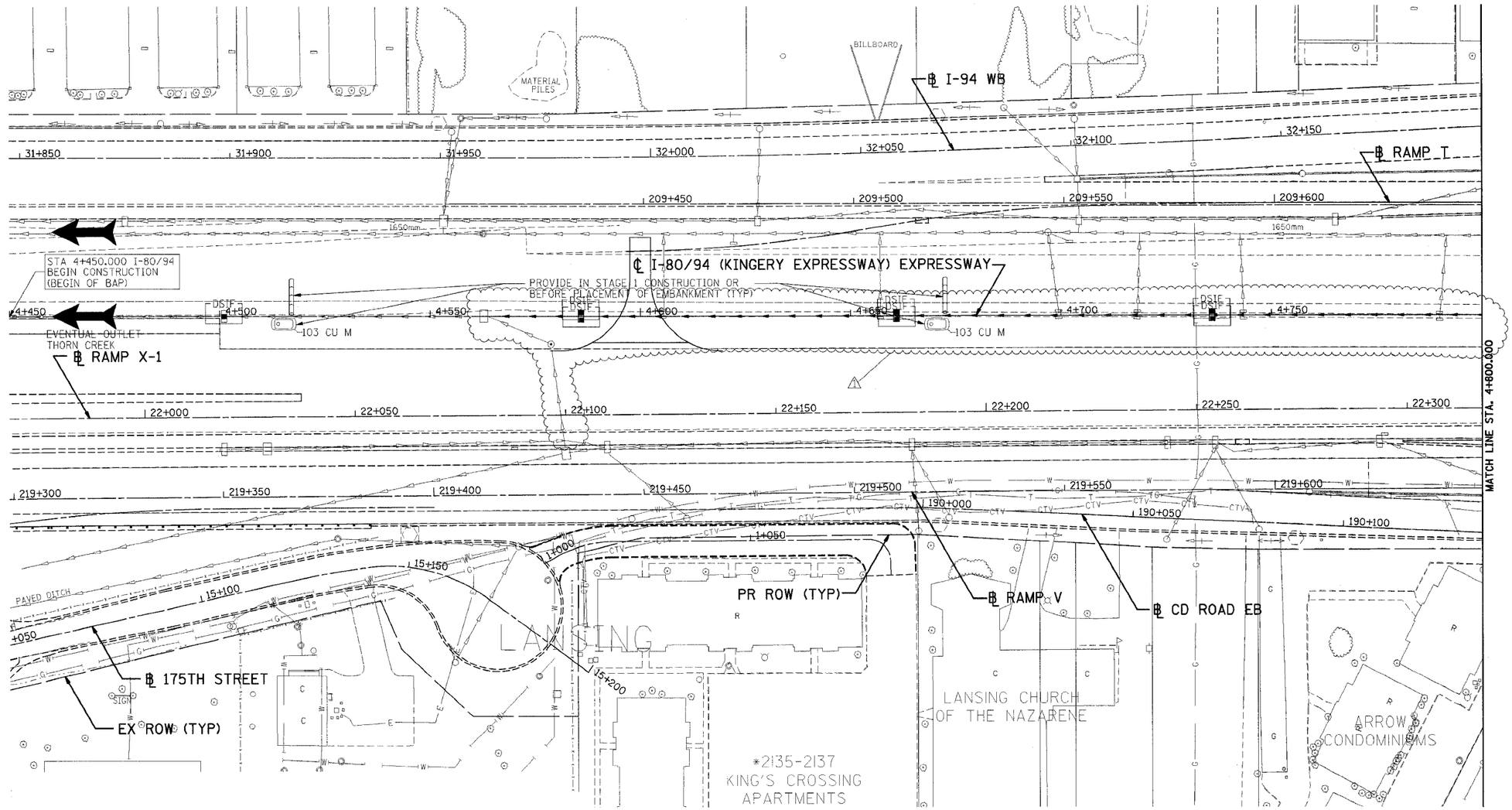

LEGEND

- WIRE FACED MSE WALL
- SHEET PILING
- STORMWATER DISCHARGE OUTLET

NOTE

1. FOR PERMANENT STRUCTURE AND PIPE INFORMATION, SEE SHEETS 210 TO 211
2. MOT SHOWN ON PLAN IS PHASE III, STAGE I
3. PROVIDE DRAINAGE STRUCTURE INLET FILTER CLEANING FOR DRAINAGE STRUCTURES ALONG CENTER LINE OF I-80 AS DIRECTED BY THE ENGINEER

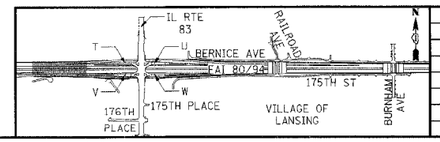

REVISIONS	
NAME	DATE
RJS	01/04/06

ILLINOIS DEPARTMENT OF TRANSPORTATION
F.A.I. ROUTE 80/94 (KINGERY EXPRESSWAY)
EB & WB INSIDE LANES (MAINLINE) CONSTRUCTION
COOK COUNTY

EROSION AND SEDIMENT CONTROL
FAI 80/94
STA. 4+500 TO STA. 4+800

SCALE: 1:500
DATE: 1/4/06

DRAWN BY: SN
CHECKED BY: MD

TENG

TENG & ASSOCIATES, INC.
ENGINEERS/ARCHITECTS/PLANNERS
CHICAGO, ILLINOIS

..\DR170012A.DGN, ..\PB990012A.DGN, ..\DR170013A.DGN, ..\DR170023A.DGN, ..\DR170022A.DGN, ..\DR170062A.DGN, ..\DR170032A.DGN
02-28-2005, 15:59:24 T:\DOCUMENT\93750\CIVIL\DGN\EC7E212A.DGN VARSHNEZ
1 2 3 4 5 6 7 8 9 10 11 12 13 14 15 16 17 18 19 20 21 22 23 24 25 26 27 28 29 30 31 32 33 34 35 36 37 38 39 40 41 42 43 44 45 46 47 48 49 50 51 52 53 54 55 56 57 58 59 60 61 62 63

F.A.I. RTE.	SECTION	COUNTY	TOTAL SHEETS	SHEET NO.
80/94	*	COOK	631	187
STA.		TO STA.		
FED. ROAD DIST. NO.		ILLINOIS	FED. AID PROJECT	

* (2425 & 2626) R-2 CONTRACT NO. 62111

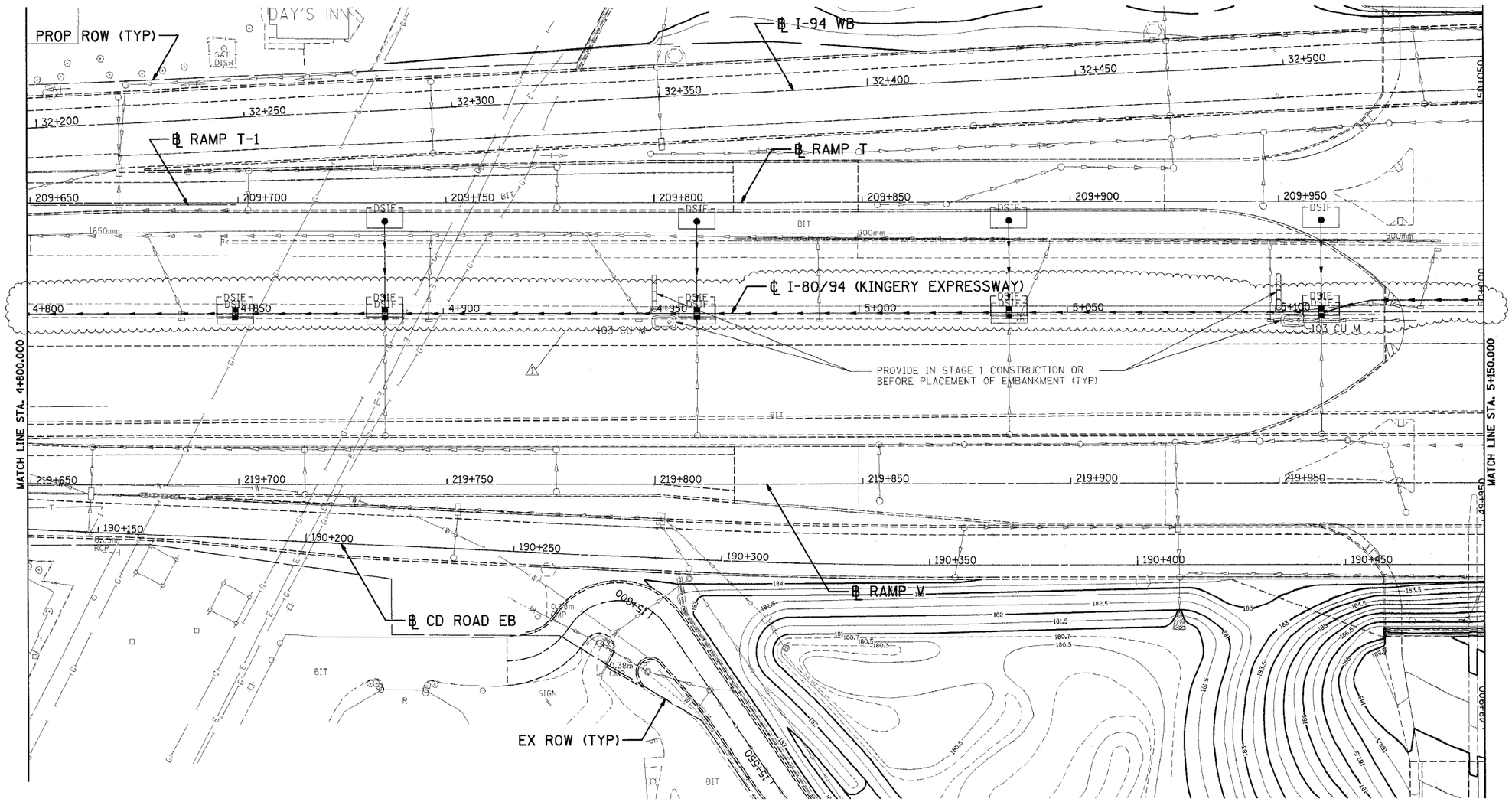

LEGEND

- WIRE FACED MSE WALL
- SHEET PILING
- STORMWATER DISCHARGE OUTLET

NOTE
1. FOR PERMANENT STRUCTURE AND PIPE INFORMATION, SEE SHEETS 210 TO 211
2. MOT SHOWN ON PLAN IS PHASE III, STAGE I
3. PROVIDE DRAINAGE STRUCTURE INLET FILTER CLEANING FOR DRAINAGE STRUCTURES ALONG CENTER LINE OF I-80 AS DIRECTED BY THE ENGINEER

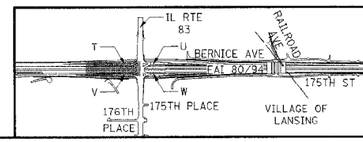

REVISIONS	
NAME	DATE
RJS	01/04/06

ILLINOIS DEPARTMENT OF TRANSPORTATION
F.A.I. ROUTE 80/94 (KINGERY EXPRESSWAY)
EB & WB INSIDE LANES (MAINLINE) CONSTRUCTION
COOK COUNTY

EROSION AND SEDIMENT CONTROL
FAI 80/94
STA. 4+800 TO STA. 5+150

SCALE: 1:500 DRAWN BY: SN
DATE: 1/4/06 CHECKED BY: MD

TENG
TENG & ASSOCIATES, INC.
ENGINEERS/ARCHITECTS/PLANNERS
CHICAGO, ILLINOIS

..\VR17002A.DGN, ..\VR17002A.DGN, ..\VR17002A.DGN,

F.A.I. RTE.	SECTION	COUNTY	TOTAL SHEETS	SHEET NO.
80/94	*	COOK	631	188
STA.		TO STA.		
FED. ROAD DIST. NO.		ILLINOIS	FED. AID PROJECT	

* (2425 & 2626) R-2 CONTRACT NO. 62111

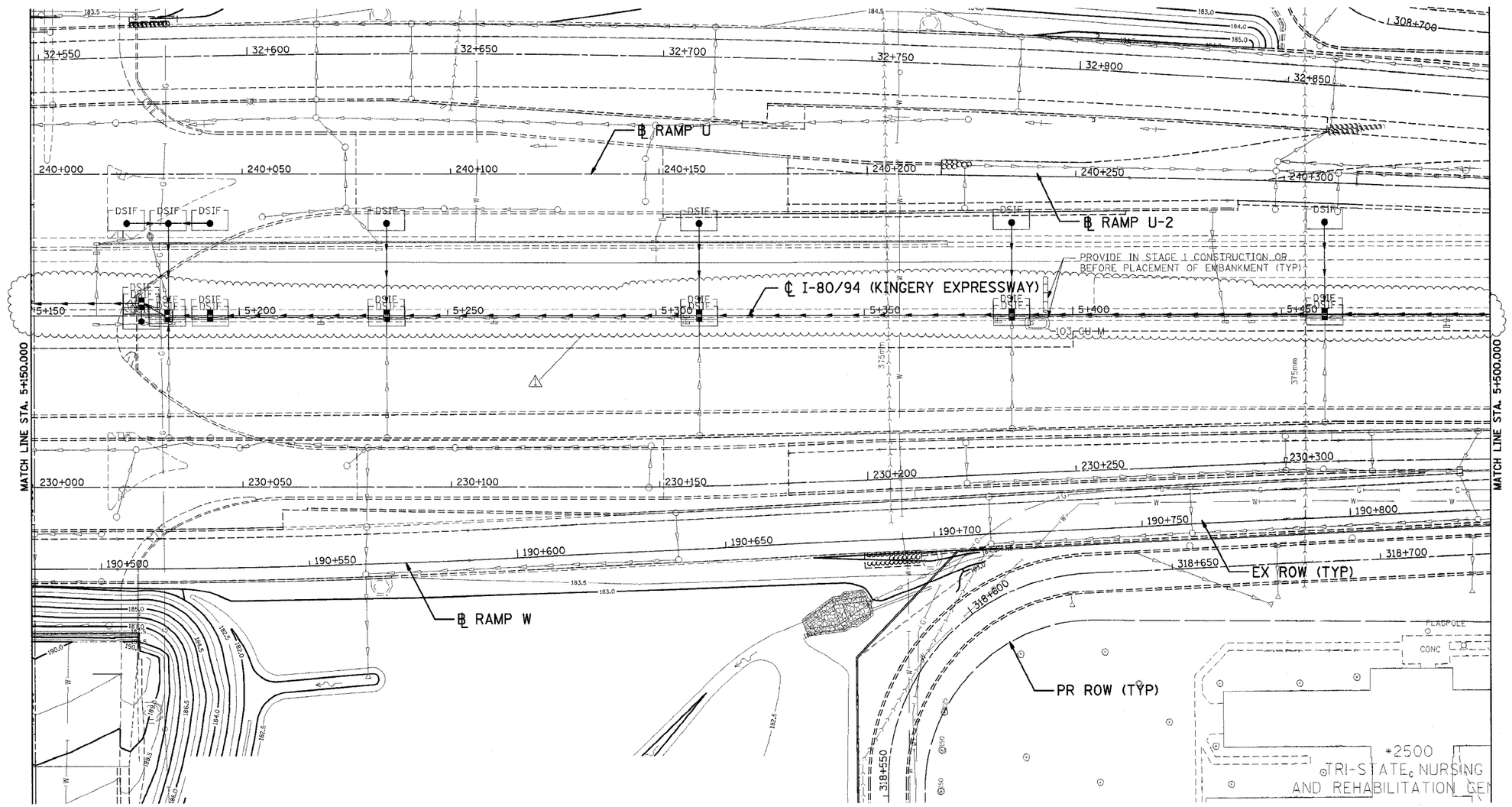

LEGEND

WIRE FACED MSE WALL

SHEET PILING

STORMWATER DISCHARGE OUTLET

NOTE
1. FOR PERMANENT STRUCTURE AND PIPE INFORMATION, SEE SHEETS 210 TO 211
2. MOT SHOWN ON PLAN IS PHASE III, STAGE I
3. PROVIDE DRAINAGE STRUCTURE INLET FILTER CLEANING FOR DRAINAGE STRUCTURES ALONG CENTER LINE OF I-80 AS DIRECTED BY THE ENGINEER

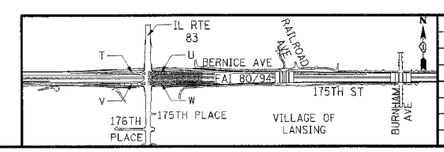

REVISIONS	
NAME	DATE
1 RJS	01/04/06

ILLINOIS DEPARTMENT OF TRANSPORTATION
F.A.I. ROUTE 80/94 (KINGERY EXPRESSWAY)
EB & WB INSIDE LANES (MAINLINE) CONSTRUCTION
COOK COUNTY

EROSION AND SEDIMENT CONTROL
FAI 80/94
STA. 5+150 TO STA. 5+500

SCALE: 1:600 DRAWN BY: SN
DATE: 1/4/06 CHECKED BY: MD

TENG & ASSOCIATES, INC.
ENGINEERS/ARCHITECTS/PLANNERS
CHICAGO, ILLINOIS

\\RRT0022A.DGN,..\DRT0032A.DGN,..\DRT0002A.DGN,..\DRT0012A.DGN,..\DRT0022A.DGN,..\PB99002A.DGN,..\ERT0052A.DGN,..\DRT0002A.DGN,..\DRT0062A.DGN,..\TRT70024.DGN,..\ER75062A.DGN,..\HR35042A.DGN,..\AB990024.DGN,..\CRA0032A.DGN
12-28-2005, 15:59:55 T:\DOCUMENT\95750\CIVIL\DGN\ED76239A.DGN VARSHNEZ
1 2 3 4 5 6 7 8 9 10 11 12 13 14 15 16 17 18 19 20 21 22 23 24 25 26 27 28 29 30 31 32 33 34 35 36 37 38 39 40 41 42 43 44 45 46 47 48 49 50 51 52 53 54 55 56 57 58 59 60 61 62 63

F.A.I. RTE.	SECTION	COUNTY	TOTAL SHEETS	SHEET NO.
80/94	*	COOK	631	189
STA.		TO STA.		
FED. ROAD DIST. NO.		ILLINOIS	FED. AID PROJECT	

* (2425 & 2626) R-2

CONTRACT NO. 62111

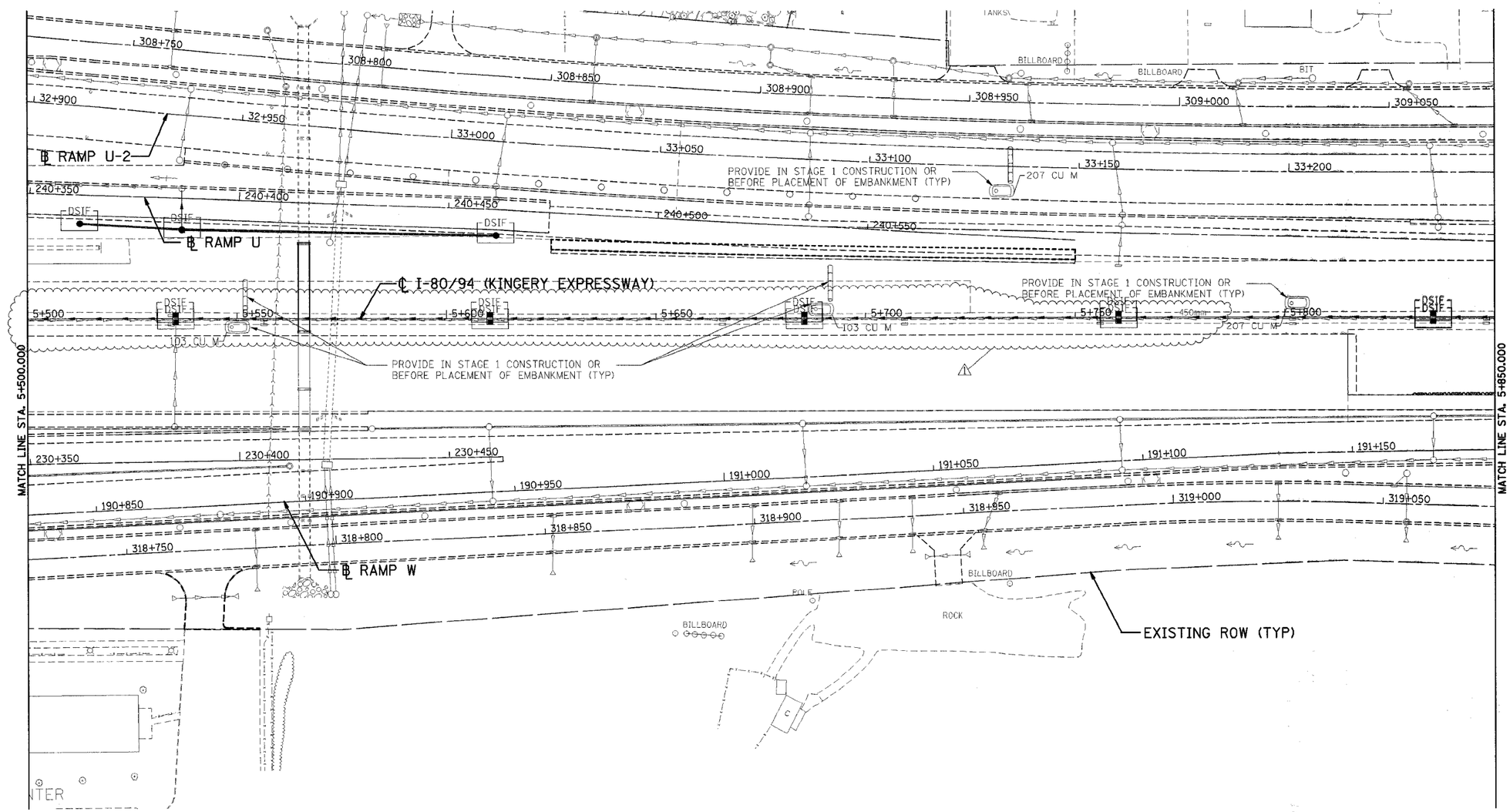

LEGEND

- WIRE FACED MSE WALL
- SHEET PILING
- STORMWATER DISCHARGE OUTLET

NOTE

1. FOR PERMANENT STRUCTURE AND PIPE INFORMATION, SEE SHEETS 210 TO 211
2. MOT SHOWN ON PLAN IS PHASE III, STAGE I
3. PROVIDE DRAINAGE STRUCTURE INLET FILTER CLEANING FOR DRAINAGE STRUCTURES ALONG CENTER LINE OF I-80 AS DIRECTED BY THE ENGINEER

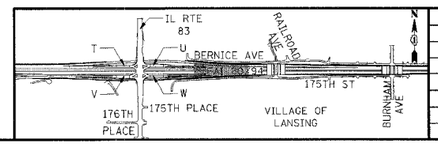

REVISIONS	
NAME	DATE
1 RJS	01/04/06

ILLINOIS DEPARTMENT OF TRANSPORTATION
F.A.I. ROUTE 80/94 (KINGERY EXPRESSWAY)
EB & WB INSIDE LANES (MAINLINE) CONSTRUCTION
COOK COUNTY

EROSION AND SEDIMENT CONTROL
FAI 80/94
STA. 5+500 TO STA. 5+850

SCALE: 1:500
DATE: 1/4/06

DRAWN BY: SN
CHECKED BY: MD

TENG

TENG & ASSOCIATES, INC.
ENGINEERS/ARCHITECTS/PLANNERS
CHICAGO, ILLINOIS

..\VRT0022A.DGN,..\DRT0032A.DGN,..\VRT0012A.DGN,..\VRT0012A.DGN,..\VRT0022A.DGN,..\ER75062A.DGN,..\ERT0052A.DGN,..\FR99002A.DGN,..\VRT0012A.DGN,..\VRT0012A.DGN,..\VRT0012

F.A.I. RTE.	SECTION	COUNTY	TOTAL SHEETS	SHEET NO.
80/94	*	COOK	631	199
STA.		TO STA.		
FED. ROAD DIST. NO.		ILLINOIS	FED. AID PROJECT	

* (2425 & 2626) R-2 CONTRACT NO. 62111

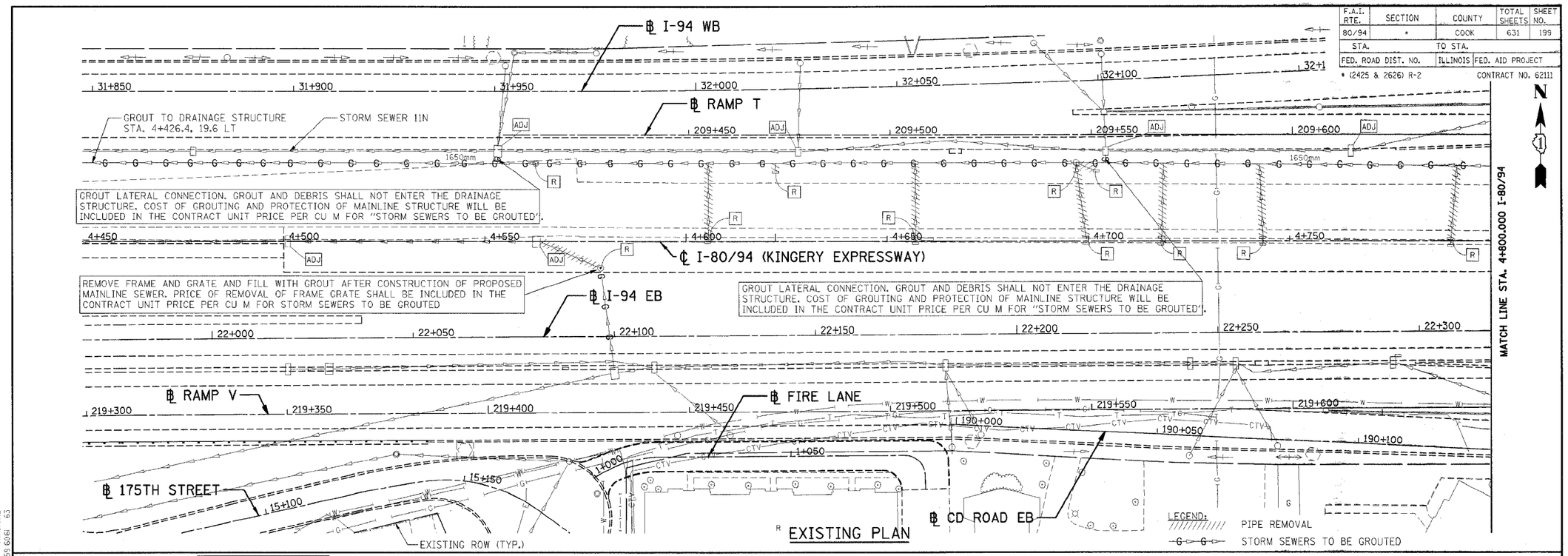

EXISTING PLAN

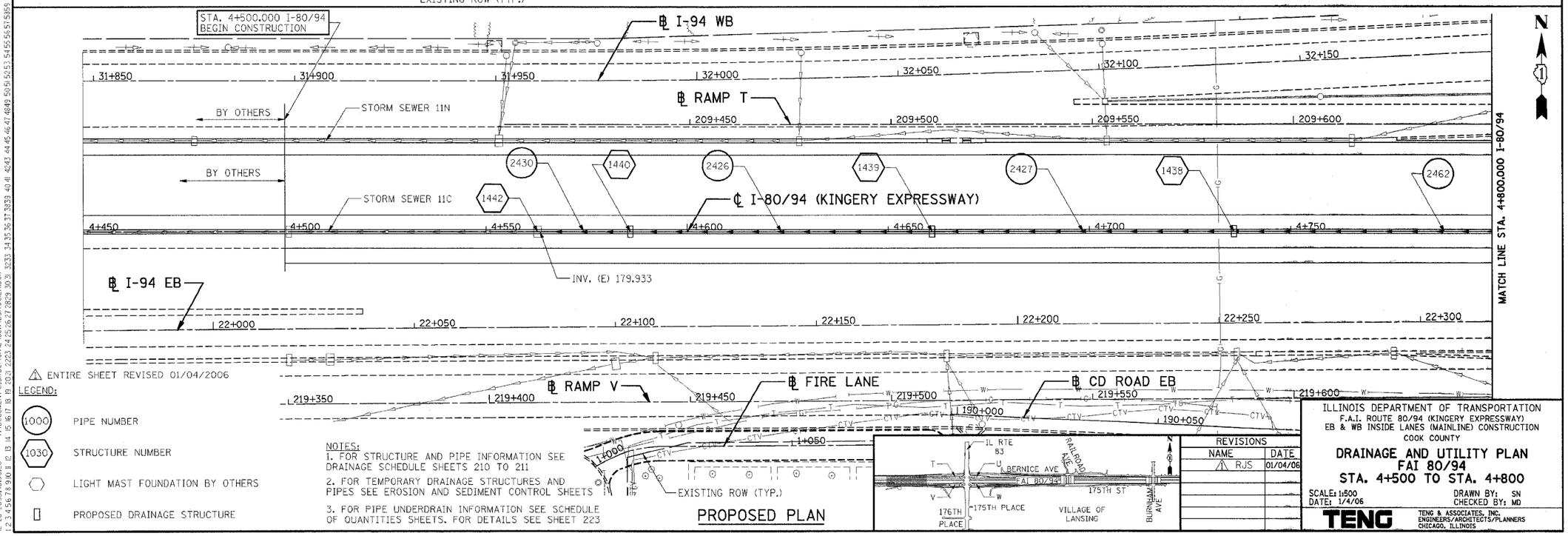

PROPOSED PLAN

⚠ ENTIRE SHEET REVISED 01/04/2006

LEGEND:

- (1000) PIPE NUMBER
- (1030) STRUCTURE NUMBER
- LIGHT MAST FOUNDATION BY OTHERS
- PROPOSED DRAINAGE STRUCTURE

NOTES:

1. FOR STRUCTURE AND PIPE INFORMATION SEE DRAINAGE SCHEDULE SHEETS 210 TO 211
2. FOR TEMPORARY DRAINAGE STRUCTURES AND PIPES SEE EROSION AND SEDIMENT CONTROL SHEETS
3. FOR PIPE UNDERDRAIN INFORMATION SEE SCHEDULE OF QUANTITIES SHEETS. FOR DETAILS SEE SHEET 223

REVISIONS	
NAME	DATE
⚠ RJS	01/04/06

ILLINOIS DEPARTMENT OF TRANSPORTATION
F.A.I. ROUTE 80/94 (KINGERY EXPRESSWAY)
EB & WB INSIDE LANES (MAINLINE) CONSTRUCTION
COOK COUNTY

DRAINAGE AND UTILITY PLAN
FAI 80/94
STA. 4+500 TO STA. 4+800

SCALE: 1:500 DRAWN BY: SN
DATE: 1/4/06 CHECKED BY: MD

TENG
TENG & ASSOCIATES, INC.
ENGINEERS/ARCHITECTS/PLANNERS
CHICAGO, ILLINOIS

..\DR170022A.DGN,..\DR170023A.DGN,..\DR170024A.DGN,..\DR170022A.DGN,..\DR170032A.DGN,..\PB99000A.DGN,..\PR170012A.DGN,..\PR170022A.DGN,..\PR170032A.DGN,..\DR170022A.DGN,..\DR170062A.DGN,..\DR170062A.DGN,..\DR170022A.DGN,..\
12-28-2005, 16:10:20 T:\DOCUMENT\93750\CIVIL\DGN\DUT0012A.DGN VARSHNKZ
1 2 3 4 5 6 7 8 9 10 11 12 13 14 15 16 17 18 19 20 21 22 23 24 25 26 27 28 29 30 31 32 33 34 35 36 37 38 39 40 41 42 43 44 45 46 47 48 49 50 51 52 53 54 55 56 57 58 59 60 61 62 63

F.A.I. RTE.	SECTION	COUNTY	TOTAL SHEETS	SHEET NO.
80/94	*	COOK	631	200
STA.		TO STA.		
FED. ROAD DIST. NO.		ILLINOIS	FED. AID PROJECT	

* (2425 & 2626) R-2 CONTRACT NO. 62111

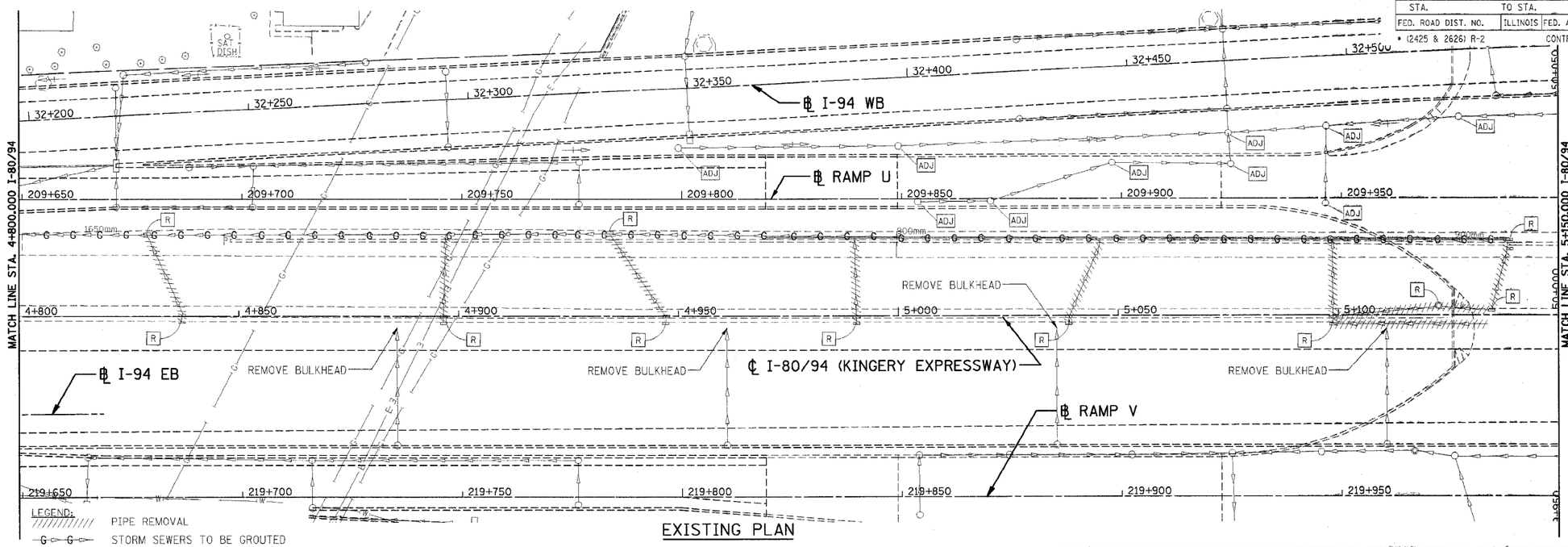

LEGEND:
PIPE REMOVAL
STORM SEWERS TO BE GROUTED

EXISTING PLAN

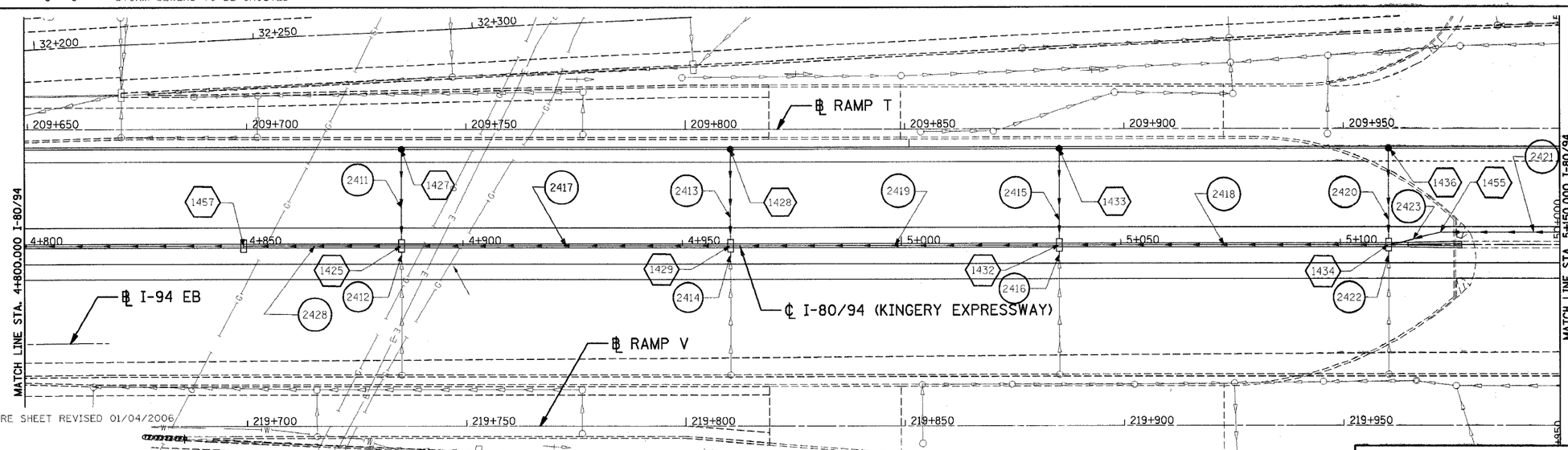

⚠ ENTIRE SHEET REVISED 01/04/2006

LEGEND:

- 1000 PIPE NUMBER
- 1030 STRUCTURE NUMBER
- LIGHT MAST FOUNDATION BY OTHERS
- PROPOSED DRAINAGE STRUCTURE

NOTES:
1. FOR STRUCTURE AND PIPE INFORMATION SEE DRAINAGE SCHEDULE SHEETS 210 TO 211
2. FOR TEMPORARY DRAINAGE STRUCTURES AND PIPES SEE EROSION AND SEDIMENT CONTROL SHEETS
3. FOR PIPE UNDERDRAIN INFORMATION SEE SCHEDULE OF QUANTITIES SHEETS. FOR DETAILS SEE SHEET 223

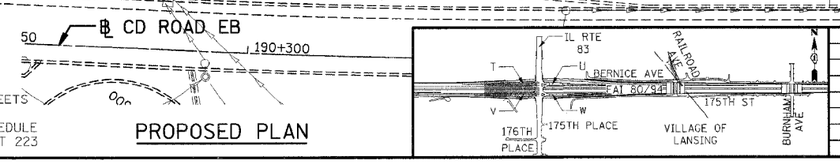

PROPOSED PLAN

REVISIONS	
NAME	DATE
⚠ RJS	01/04/06

ILLINOIS DEPARTMENT OF TRANSPORTATION
F.A.I. ROUTE 80/94 (KINGERY EXPRESSWAY)
EB & WB INSIDE LANES (MAINLINE) CONSTRUCTION
COOK COUNTY

DRAINAGE AND UTILITY PLAN
FAI 80/94
STA. 4+800 TO STA. 5+150

SCALE: 1:500 DRAWN BY: SN
DATE: 1/4/06 CHECKED BY: MD

TENG
TENG & ASSOCIATES, INC.
ENGINEERS/ARCHITECTS/PLANNERS
CHICAGO, ILLINOIS

..\HR70022A.DGN,..\HR70032A.DGN,..\HR70022A.DGN,..\HR70022A.DGN,..\HR70032A.DGN,..\HR70032A.DGN,..\HR70012A.DGN,..\HR70012A.DGN,..\HR70016A.DGN,..\HR70012A.DGN,..\HR70022A.DGN,..\
12-29-2005,16:00:35 T:\DOCUMENT\93190\CIVIL\DGN\DU70032A.DGN VARSHNEZ
1 2 3 4 5 6 7 8 9 10 11 12 13 14 15 16 17 18 19 20 21 22 23 24 25 26 27 28 29 30 31 32 33 34 35 36 37 38 39 40 41 42 43 44 45 46 47 48 49 50 51 52 53 54 55 56 57 58 59 60 61 62

F.A.I. RTE.	SECTION	COUNTY	TOTAL SHEETS	SHEET NO.
80/94	*	COOK	631	201
STA.		TO STA.		
FED. ROAD DIST. NO.		ILLINOIS	FED. AID PROJECT	

* (2425 & 2626) R-2 CONTRACT NO. 62111

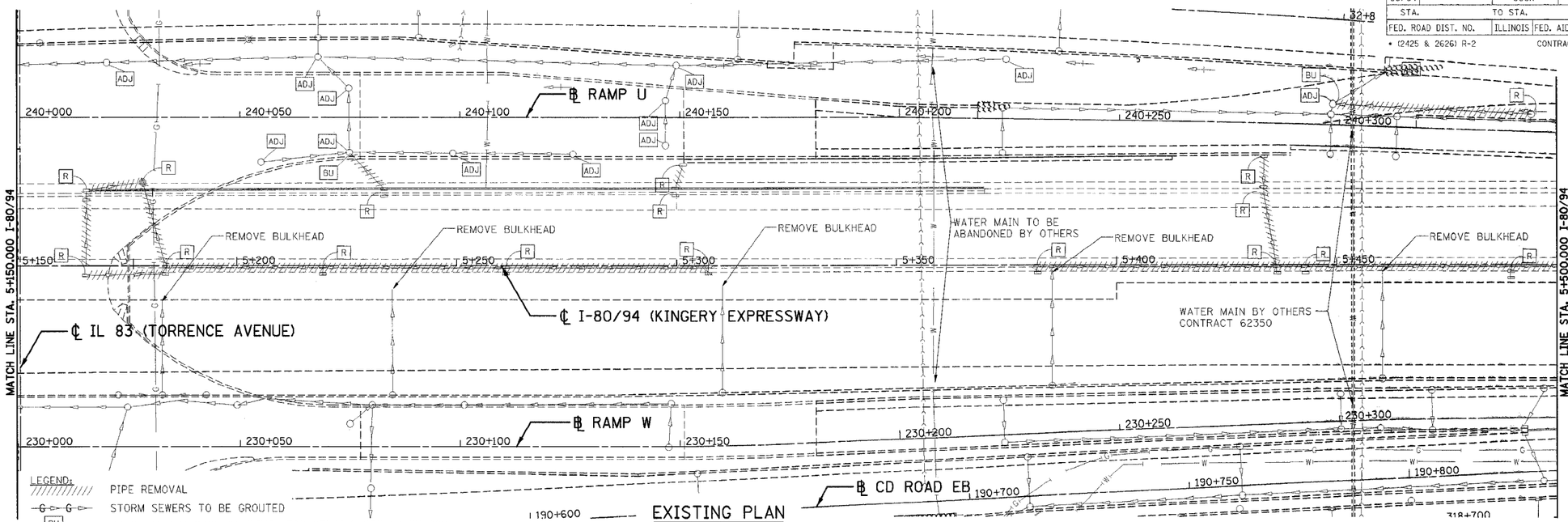

LEGEND:

PIPE REMOVAL

STORM SEWERS TO BE GROUTED

BU CONCRETE MASONRY BULKHEAD. FOR DETAILS SEE SHEET 222

EXISTING PLAN

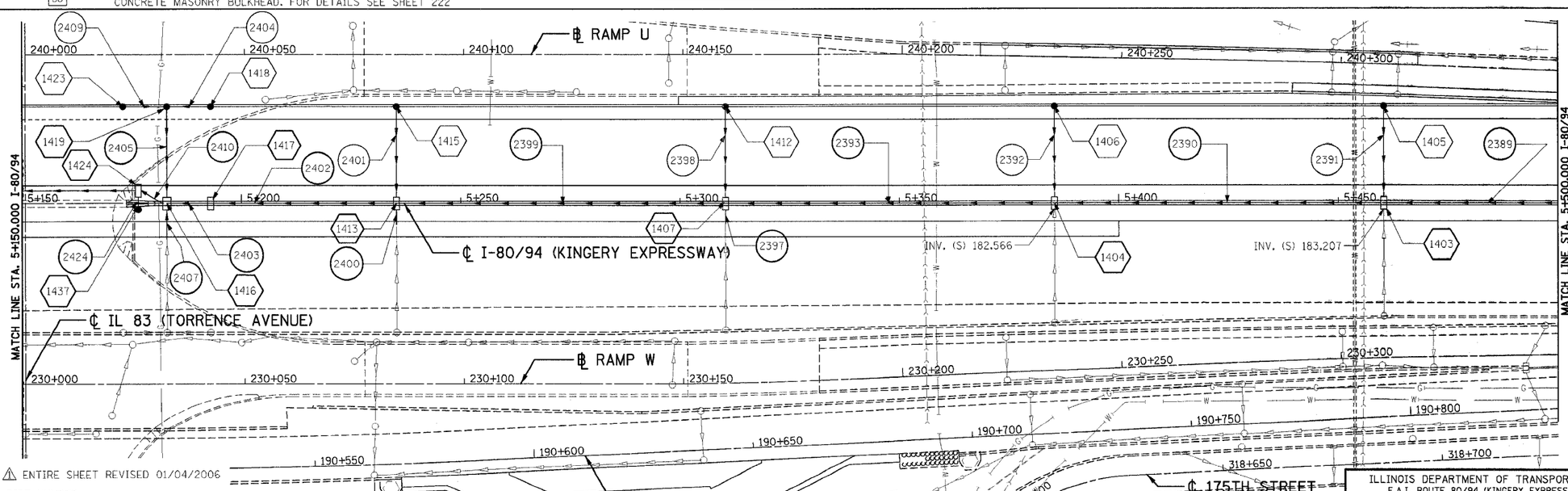

LEGEND:

⚠ ENTIRE SHEET REVISED 01/04/2006

(1000) PIPE NUMBER

(1030) STRUCTURE NUMBER

LIGHT MAST FOUNDATION BY OTHERS

PROPOSED DRAINAGE STRUCTURE

NOTES:

1. FOR STRUCTURE AND PIPE INFORMATION SEE DRAINAGE SCHEDULE SHEETS 210 TO 211

2. FOR TEMPORARY DRAINAGE STRUCTURES AND PIPES SEE EROSION AND SEDIMENT CONTROL SHEETS

3. FOR PIPE UNDERDRAIN INFORMATION SEE SCHEDULE OF QUANTITIES SHEETS. FOR DETAILS SEE SHEET 223

PROPOSED PLAN

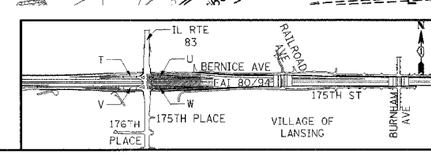

REVISIONS	
NAME	DATE
⚠ RJS	01/04/06

ILLINOIS DEPARTMENT OF TRANSPORTATION
F.A.I. ROUTE 80/94 (KINGERY EXPRESSWAY)
EB & WB INSIDE LANES (MAINLINE) CONSTRUCTION
COOK COUNTY

DRAINAGE AND UTILITY PLAN
FAI 80/94
STA. 5+150 TO STA. 5+500

SCALE: 1:500 DRAWN BY: JFS
DATE: 1/4/06 CHECKED BY: RUM

TENG & ASSOCIATES, INC.
ENGINEERS/ARCHITECTS/PLANNERS
CHICAGO, ILLINOIS

..\RRIT0022A.DGN, ..\RRIT0022A.DGN, ..\RRIT0022A.DGN, ..\RRIT0032A.DGN, ..\RRIT0032A.DGN, ..\RRIT0032A.DGN, ..\RRIT0032A.DGN, ..\RRIT0032A.DGN, ..\RRIT0032A.DGN, ..\RRIT0062A.DGN, ..\RRIT0062A.DGN, ..\RRIT0062A.DGN, ..\RRIT0062A.DGN, ..\B99900A2.DGN, ..\B99900A2.DGN, ..\B99900A2

F.A.I. RTE.	SECTION	COUNTY	TOTAL SHEETS	SHEET NO.
80/94	*	COOK	631	202
STA.		TO STA.		
FED. ROAD DIST. NO.		ILLINOIS	FED. AID PROJECT	

* (2425 & 2626) R-2 CONTRACT NO. 62111

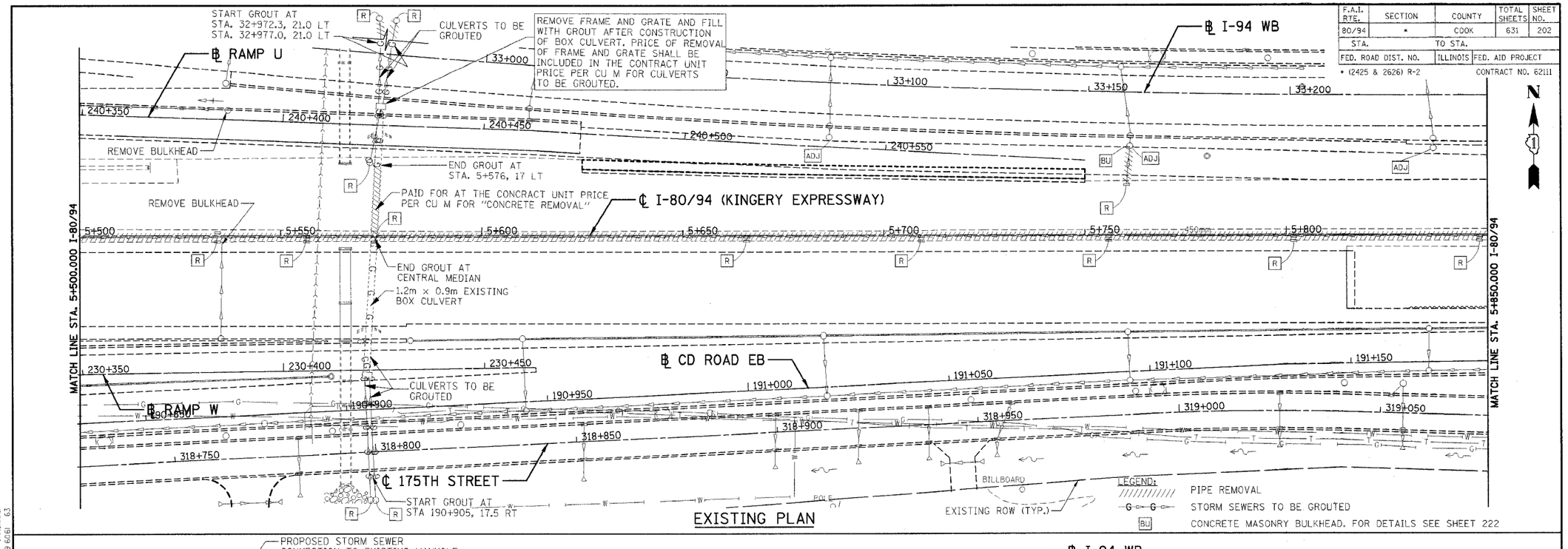

EXISTING PLAN

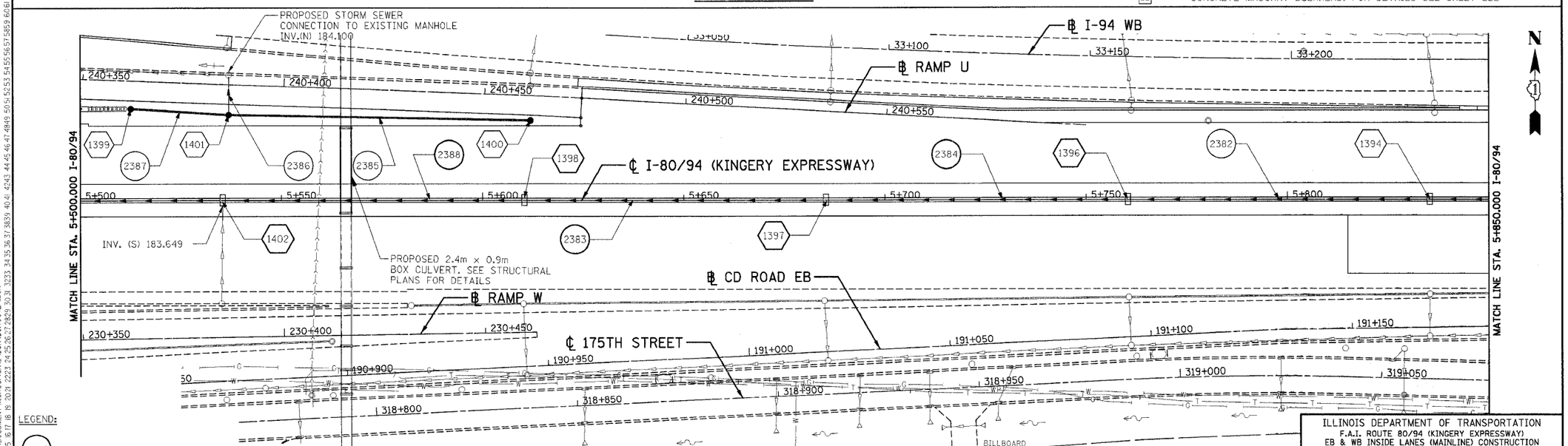

LEGEND:

- (1000) PIPE NUMBER
- (1030) STRUCTURE NUMBER
- LIGHT MAST FOUNDATION BY OTHERS
- PROPOSED DRAINAGE STRUCTURE

NOTES:

1. FOR STRUCTURE AND PIPE INFORMATION SEE DRAINAGE SCHEDULE SHEETS 210 TO 211
2. FOR TEMPORARY DRAINAGE STRUCTURES AND PIPES SEE EROSION AND SEDIMENT CONTROL SHEETS
3. FOR PIPE UNDERDRAIN INFORMATION SEE SCHEDULE OF QUANTITIES SHEETS. FOR DETAILS SEE SHEET 223

⚠ ENTIRE SHEET REVISED 01/04/2006

PROPOSED PLAN

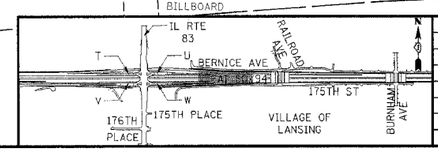

REVISIONS	
NAME	DATE
⚠ RJS	01/04/06

ILLINOIS DEPARTMENT OF TRANSPORTATION
F.A.I. ROUTE 80/94 (KINGERY EXPRESSWAY)
EB & WB INSIDE LANES (MAINLINE) CONSTRUCTION
COOK COUNTY

DRAINAGE AND UTILITY PLAN
FAI 80/94
STA. 5+500 TO STA. 5+850

SCALE: 1:500 DRAWN BY: SN
DATE: 1/4/06 CHECKED BY: MD

TENG & ASSOCIATES, INC.
ENGINEERS/ARCHITECTS/PLANNERS
CHICAGO, ILLINOIS

..\VR170022A.DGN..\VR170022A.DGN..\VR170022A.DGN..\VR170022A.DGN..\VR170032A.DGN..\VR170032A.DGN..\VR170012A.DGN..\VR170062A.DGN..\VR170012A.DGN..\VR170022A.DGN..\VR170022A.DGN..\VR170022

F.A.I. RTE.	SECTION	COUNTY	TOTAL SHEETS	SHEET NO.
80/94	*	COOK	631	210
STA.		TO STA.		
FED. ROAD DIST. NO.		ILLINOIS	FED. AID PROJECT	

* (2425 & 2626) R-2 CONTRACT NO. 62111

STRUCT. NO.	DESCRIPTION	BASELINE STATION	BASELINE OFFSET(M)	BASELINE DIR.	INV. N	INV. S	INV. E	INV. W	PROPOSED RIM ELEV	SHEET NO.	SC INLET FILTER
1344	DR STR T1 SP 2T20F&G	6+173.616	0.001	LT	187.750	--	--	187.750	189.374	203	YES
1351	DR STR T1 SP 2T20F&G	6+248.611	0.001	LT	--	--	187.000	--	188.636	204	YES
1352	DR STR T1 SP 2T20F&G	6+319.809	0.001	LT	--	184.500	--	184.500	187.834	204	YES
1358	DR STR T1 SP 2T20F&G	6+394.810	0.001	LT	--	--	185.530	--	187.199	204	YES
1364	DR STR T1 SP 2T20F&G	6+422.623	0.001	LT	--	--	184.830	184.830	187.121	204	YES
1365	DR STR T2 SP 2T22F&G	6+433.000	0.001	LT	--	184.600	184.900	184.600	187.115	204	YES
1369	DR STR T1 SP 2T20F&G	6+442.631	0.001	LT	--	--	--	185.280	187.120	204	YES
1377	DR STR T1 SP 2T20F&G	6+724.194	0.001	LT	187.229	--	--	--	189.496	205	YES
1378	DR STR T1 SP 2T20F&G	6+653.009	0.001	LT	--	187.200	--	--	189.108	205	YES
1380	DR STR T1 SP 2T20F&G	6+578.009	0.001	LT	185.297	--	--	185.300	188.291	205	YES
1386	DR STR T1 SP 2T20F&G	6+503.009	0.001	LT	--	--	185.816	--	187.392	204	YES
1387	DR STR T1 SP 2T20F&G	6+098.621	0.001	LT	--	--	188.180	--	189.766	203	YES
1392	DR STR T1 SP 2T20F&G	5+985.332	0.001	LT	--	--	--	187.399	189.734	203	YES
1393	DR STR T1 SP 2T20F&G	5+910.359	0.001	LT	--	--	186.736	186.736	189.138	203	YES
1394	DR STR T1 SP 2T20F&G	5+835.359	0.001	LT	--	--	186.073	186.073	188.486	202	YES
1399	CB A 1.2M D T1F OL	5+512.538	22.647	LT	--	--	184.732	--	185.762	202	YES
1400	CB A 1.2M D T1F OL	5+611.869	19.786	LT	--	--	--	185.639	186.682	202	YES
1401	CB A 1.2M D T1F OL	5+536.883	21.149	LT	184.400	--	184.966	184.566	185.993	202	YES
1405	CB 1.2X0.9 SPL T20F&G	5+460.357	22.081	LT	--	183.500	--	--	185.222	201	YES
1406	CB 1.2X0.9 SPL T20F&G	5+385.357	22.081	LT	--	182.810	--	--	184.570	201	YES
1412	CB 1.2X0.9 SPL T20F&G	5+310.356	22.081	LT	--	182.210	--	--	183.917	201	YES
1415	CB 1.2X0.9 SPL T20F&G	5+235.356	22.081	LT	--	181.560	--	--	183.278	201	YES
1418	CB 1.2X0.9 SPL T20F&G	5+193.000	22.081	LT	--	--	--	181.300	183.106	201	YES
1419	CB 1.2X1.5 SPL T22F&G	5+183.007	22.081	LT	--	181.200	181.200	181.200	183.099	201	YES
1423	CB 1.2X0.9 SPL T20F&G	5+173.003	22.081	LT	--	--	181.300	--	183.105	201	YES
1427	CB 1.2X0.9 SPL T20F&G	4+886.001	22.081	LT	--	181.755	--	--	185.189	200	YES
1428	CB 1.2X0.9 SPL T20F&G	4+961.001	22.081	LT	--	181.792	--	--	184.646	200	YES
1433	CB 1.2X0.9 SPL T20F&G	5+036.001	22.081	LT	--	181.829	--	--	184.037	200	YES
1436	CB 1.2X0.9 SPL T20F&G	5+111.001	22.081	LT	--	181.367	--	--	183.427	200	YES
1459	CB A 1.2M D T1F OL	60+156.983	10.176	LT	--	--	178.855	--	182.274	207	YES
1460	PRO SS CONN TO EX SS	60+157.001	8.280	LT	--	--	178.804	178.804	--	207	NO
1461	PRO SS CONN TO EX SS	60+157.000	6.269	LT	--	--	178.804	178.804	--	207	NO
1462	CB A 1.2M D T24F&G	60+157.003	10.159	RT	--	--	--	179.437	182.262	207	YES
1463	CB A 1.2M D T24F&G	60+043.655	18.180	LT	180.030	180.330	--	--	182.542	207	YES
1464	R C PIPE ELBOW 300MM	60+041.342	15.955	LT	180.180	--	180.180	--	--	207	NO
1465	R C PIPE ELBOW 300MM	60+041.338	0.026	LT	--	--	180.180	180.180	--	207	NO
1466	CB A 1.2M D T24F&G	60+050.597	9.551	RT	--	--	180.815	180.815	182.330	207	YES
1467	PRO SS CONN TO EX SS	60+030.048	8.915	LT	--	--	178.906	178.906	--	209	NO
1468	PRO SS CONN TO EX SS	60+034.000	6.803	LT	--	178.903	178.903	--	--	209	NO
1469	CB A 1.2M D T24F&G	60+030.138	10.627	LT	--	--	178.915	--	181.250	209	YES
1470	CB A 1.2M D T24F&G	60+033.812	17.588	RT	--	--	179.200	179.200	181.992	209	YES
1471	CB A 1.2M D T24F&G	59+970.000	11.772	LT	--	--	179.100	--	182.256	207	YES
1472	PRO SS CONN TO EX SS	59+970.009	9.211	LT	--	--	178.954	178.954	--	207	NO
1474	PRO SS CONN TO EX SS	59+969.989	7.074	LT	--	--	178.954	178.954	--	207	NO
1475	CB A 1.2M D T24F&G	59+970.007	11.639	RT	--	--	180.000	180.000	182.262	207	YES
1476	CB A 1.2M D T24F&G	59+957.352	16.982	LT	--	180.410	180.410	--	182.134	207	YES
1477	PRO SS CONN TO EX SS	59+846.189	6.818	LT	--	--	179.053	179.053	--	207	NO
1479	CB A 1.2M D T24F&G	59+953.037	11.477	RT	--	180.740	--	180.740	182.222	207	YES
1480	R C PIPE ELBOW 300MM	59+957.051	4.190	RT	--	--	180.355	180.355	--	207	NO
1481	CB A 1.2M D T8G	60+135.994	11.416	LT	181.103	--	179.000	--	182.637	207	YES
1482	INLETS TA T24F&G	59+842.995	8.103	LT	--	181.247	--	--	182.197	207	YES
1483	CB A 1.2M D T24F&G	59+846.152	8.101	RT	--	180.000	--	180.000	182.216	207	YES
1484	INLETS TA T24F&G	60+140.105	8.099	LT	--	181.408	--	--	182.358	207	YES
1485	CB A 1.2M D T24F&G	60+139.982	8.101	RT	--	--	--	180.166	182.358	207	YES
1486	CB A 1.2M D T24F&G	59+824.500	8.101	RT	180.700	--	--	--	182.147	207	YES
1487	INLETS TA T24F&G	59+824.500	8.116	LT	181.197	--	--	--	182.147	207	YES
1489	CB A 1.2M D T8G	59+918.000	12.300	RT	181.300	--	--	--	182.300	207	YES
1490	CB A 1.2M D T8G	59+945.001	12.000	RT	180.850	180.850	--	--	181.820	207	YES
1491	CB A 1.2M D T8G	59+945.043	12.700	LT	180.469	--	--	--	181.906	207	YES
1492	INLETS TA T1F OL	320+033.500	4.299	RT	180.655	--	--	--	181.935	208	YES
1493	CB A 1.2M D T1F OL	320+034.500	4.301	LT	--	180.615	--	180.615	181.925	208	YES
1494	CB A 1.2M D T1F OL	310+041.865	4.299	RT	--	--	179.700	179.700	181.786	209	YES

STRUCT. NO.	DESCRIPTION	BASELINE STATION	BASELINE OFFSET(M)	BASELINE DIR.	INV. N	INV. S	INV. E	INV. W	PROPOSED RIM ELEV	SHEET NO.	SC INLET FILTER
1495	CB A 1.2M D T1F OL	310+057.000	4.301	LT	--	179.900	179.900	--	181.730	209	YES
1496	INLETS TA T1F OL	310+063.036	4.301	LT	--	--	--	180.000	181.738	209	YES
1497	CB A 1.2M D T1F OL	310+057.000	4.299	RT	179.800	--	--	179.800	181.730	209	YES
1498	MAN A 1.2D T1F CL	300+013.486	24.397	RT	--	181.988	--	181.988	183.180	206	NO
1499	CB A 1.2M D T1F OL	300+016.382	11.554	LT	--	--	182.141	182.141	183.039	206	YES
1501	CB A 1.2M D T1F OL	300+090.795	5.850	RT	--	--	182.065	--	182.973	206	YES
1502	CB A 1.2M D T1F OL	300+103.442	19.906	RT	--	181.985	181.985	181.985	182.954	206	YES
1503	CB A 1.2M D T1F OL	300+099.443	12.513	LT	--	--	182.121	182.121	182.916	206	YES
1504	CB A 1.2M D T1F OL	300+018.122	10.422	RT	--	--	182.057	--	183.013	206	YES
1506	INLETS TA T1F OL	300+012.625	22.525	LT	--	182.746	--	--	183.343	206	YES
1507	PRO SS CONN TO EX SS	60+140.000	6.267	LT	--	178.818	178.818	--	--	207	NO
1510	INLETS TA T1F OL	320+072.000	4.299	RT	--	--	--	180.069	181.783	208	YES
1511	CB A 1.2M D T1F OL	320+065.000	4.299	RT	180.640	--	180.640	--	181.776	208	YES
1512	INLETS TA T1F OL	320+059.983	4.301	LT	--	--	180.821	--	181.780	208	YES
1513	CB A 1.2M D T1F OL	320+065.000	4.301	LT	--	180.800	--	180.800	181.776	208	YES
1514	MAN A 1.2D T1F CL	320+065.000	2.294	RT	180.600	180.600	180.000	180.000	181.798	208	NO
1515	INLETS TA T1F OL	320+097.147	3.981	LT	--	180.014	--	--	181.885	208	YES
1516	INLETS TA T1F OL	320+090.759	4.397	RT	--	--	180.250	--	181.801	208	YES
1517	INLETS TA T1F OL	320+107.244	5.874	RT	180.936	--	--	--	181.888	208	YES
1518	CB A 1.2M D T8G	60+064.989	12.580	LT	--	180.428	--	--	181.850	207	YES
1519	CB A 1.2M D T8G	60+048.402	17.046	RT	--	--	--	180.844	181.750	207	YES
1525	R C PIPE ELBOW 300MM	320+105.961	4.502	RT	--	180.888	--	180.888	--	208	NO
1526	R C PIPE ELBOW 300MM	320+096.316	5.272	RT	180.000	--	--	180.000	--	208	NO
1551	MAN A 1.2D T1F CL	300+102.865	15.270	RT	--	182.003	182.003	182.003	183.000	206	NO
1601	CB A 1.2 M D T1F OL	59+838.999	11.338	LT	180.950	180.220	179.100	--	182.408	207	YES
1602	R C PIPE ELBOW 300MM	59+838.026	9.927	LT	--	--	179.070	179.070	--	207	NO
1609	PRO SS CONN TO EX SS	59+838.011	8.915	LT	--	--	179.051	179.051	--	207	NO
1610	PRO SS CONN TO EX SS	60+135.991	8.432	LT	--	--	178.820	178.820	--	207	NO
3107	EXISTING STRUCTURE	319+977.523	4.854	LT	--	--	180.615	--	182.052	208	NO
3217	EXISTING STRUCTURE	319+989.801	4.850	LT	--	--	180.600	--	181.270	208	NO
3222	EXISTING STRUCTURE	309+990.261	5.722	RT	--	--	180.600	180.600	182.252	209	NO
3297	MAN A 1.8D T1F CL	320+024.276	6.834	RT	--	--	180.565	180.565	182.000	208	NO
3298	MAN A 1.8D T1F CL	320+090.371	7.967	RT	--	--	180.296	180.296	182.107	208	NO
3299	MAN A 2.1D T1F CL	309+976.427	4.849	RT	--	--	180.618	180.618	182.140	209	NO
3300	MAN A 2.1D T1F CL	310+029.150	9.760	LT	--	--	180.465	180.484	182.248	209	NO
3301	R C PIPE ELBOW 300MM	60+048.847	12.912	LT	180.360	180.360	--	--	--	207	NO
E14	EXISTING STRUCTURE	320+113.053	8.040	RT	--	--	--	180.275	182.097	208	NO
1396	DR STR T1 SP 2T20F&G	5+760.358	0.000	LT	--	--	185.410&	185.410	187.833	202	YES
1397	DR STR T1 SP 2T20F&G	5+685.358	0.000	LT	--	--	184.747	184.747	187.180	202	YES
1398	DR STR T1 SP 2T20F&G	5+610.357	0.000	LT	--	--	184.084	184.084	186.528	202	YES
1402	DR STR T1 SP 2T20F&G	5+535.357	0.000	LT	--	183.649	183.421	183.421	185.875	202	YES
1403	DR STR T1 SP 2T20F&G	5+460.357	0.000	LT	183.296	183.207	182.758	182.758	185.222	201	YES
1404	DR STR T1 SP 2T20F&G	5+385.357	0.000	LT	182.600	182.566	182.095	182.095	184.570	201	YES
1407	DR STR T1 SP 2T20F&G	5+310.357	0.000	LT	182.000	181.432	181.432	181.432	183.917	201	YES
1413	DR STR T1 SP 2T20F&G	5+235.356	0.000	LT	181.350	181.206	180.769	180.769	183.278	201	YES
1416	DR STR T2 SP 2T22F&G	5+183.009	0.000	LT	180.945	181.010	180.346	180.346	183.105	201	YES
1417	DR STR T1 SP 2T20F&G	5+193.003	0.000	LT	--	--	180.420	180.417	183.106	201	YES
1424	DR STR T1 SP 2T20F&G	5+176.517	2.001	LT	--	181.000	180.345	180.345	184.259	201	YES
1425	DR STR T1 SP 2T20F&G	4+886.001	0.000	LT	180.752	180.322	180.322	180.322	185.177	200	YES
1429	DR STR T1 SP 2T20F&G	4+961.001	0.000	LT	180.789	180.802	180.328	180.328	184.646	200	YES
1432	DR STR T1 SP 2T20F&G	5+036.000	0.000	LT	180.826	180.839	180.334	180.334	184.036	200	YES
1434	DR STR T1 SP 2T20F&G	5+111.000	0.000	LT	180.863	180.863	180.340	180.340	183.427	200	YES
1437	CB 1.2X0.9 SPL T20F&G	5+176.517	1.357	RT	181.010	--	--	--	183.113	201	YES
1438	DR STR T1 SP 2T20F&G	4+735.881	0.000	LT	--	--	180.078	180.078	185.206	199	YES
1439	DR STR T1 SP 2T20F&G	4+660.881	0.000	LT	--	--	180.041	180.041	184.981	199	YES
1440	DR STR T2 SP 2T22F&G	4+585.881	0.000	LT	--	--	180.004	180.004	184.756	199	YES
1442	EXISTING STRUCTURE	4+567.863	0.000	LT	--	179.993	179.993	179.993	184.687	199	YES
1455	R C PIPE ELBOW 1500MM	5+122.758	2.900	LT	--	--	180.268	180.268	--	200	NO
1457	DR STR T1 SP 2T20F&G	4+850.000	0.000	LT	--	--	176.430	180.134	185.312	199	YES

1

REVISIONS	
NAME	DATE
1 KV	01/04/06

ILLINOIS DEPARTMENT OF TRANSPORTATION
F.A.I. ROUTE 80/94 (KINGERY EXPRESSWAY)
EB & WB INSIDE LANES (MAINLINE) CONSTRUCTION
COOK COUNTY

DRAINAGE SCHEDULE I
PROPOSED STRUCTURES

SCALE: NONE
DATE: 1/4/06

DRAWN BY: SN
CHECKED BY: MD

TENG
TENG & ASSOCIATES, INC.
ENGINEERS/ARCHITECTS/PLANNERS
CHICAGO, ILLINOIS

..\DR1TR02A.DGN,..\DR1TR02A.DGN,..\DR1TR02A.DGN,..\DR1TR02A.DGN,..\A99I0002A.DGN
12-28-2005,16:09:07 T:\DOCUMENT\93I50K\CIVIL\DGN\DU1T0432A.DGN
1 2 3 4 5 6 7 8 9 10 11 12 13 14 15 16 17 18 19 20 21 22 23 24 25 26 27 28 29 30 31 32 33 34 35 36 37 38 39 40 41 42 43 44 45 46 47 48 49 50 51 52 53 54 55 56 57 58 59 60 61 62 63
VARSHNEY

F.A.I. RTE.	SECTION	COUNTY	TOTAL SHEETS	SHEET NO.
80/94	*	COOK	631	211
STA.		TO STA.		
FED. ROAD DIST. NO.		ILLINOIS	FED. AID PROJECT	

* (2425 & 2626) R-2 CONTRACT NO. 62111

PIPE/ CULVERT NO.	DESCRIPTION	DIA. (MM)	LENGTH (M)	SLOPE (%)	TRENCH BACKFILL (CU M)	SHEET NO.	FROM STR. 1	TO STR. 2
2323	SS 2 RCP CL 3 300	300	74.34	0.578	42.8	203	1387	1344
2333	SS 2 RCP CL 3 300	300	19.93	4.516	39.2	203	1344	E.S.
2338	SS 2 RCP CL 3 300	300	69.88	3.578	144.6	204	1351	1352
2340	SS 3 RCP CL 4 300	300	24.05	2.765	83.8	204	1352	E.S.
2352	SS 2 RCP CL 3 300	300	26.49	2.642	23.7	204	1358	1364
2353	SS 2 RCP CL 3 450	450	8.35	2.756	18.3	204	1364	1365
2354	SS 2 RCP CL 3 525	525	24.47	3.677	42.3	204	1365	E.S.
2357	SS 2 RCP CL 3 300	300	8.40	4.522	7.9	204	1369	1365
2367	SS 3 RCP CL 4 300	300	24.05	9.331	68.0	205	1378	E.S.
2376	SS 2 RCP CL 3 300	300	73.68	0.700	142.9	204	1386	1380
2380	SS 2 RCP CL 3 300	300	73.65	0.900	158.7	203	1392	1393
2381	SS 2 RCP CL 3 375	375	73.68	0.900	170.8	203	1393	1394
2382	SS 2 RCP CL 3 450	450	73.68	0.900	175.5	202	1394	E.S.
2385	SLOTTED DR 300MM W/VAR H. SLOT	300	73.77	0.912	-	202	1400	1401
2386	SS 2 RCP CL 3 300	300	8.75	3.427	3.1	202	1401	E.S.
2387	SLOTTED DR 300MM W/VAR H. SLOT	300	23.17	0.717	-	202	1399	1401
2391	SS 2 RCP CL 3 300	300	20.05	1.017	14.2	201	1405	E.S.
2392	SS 2 RCP CL 3 300	300	20.05	1.047	14.9	201	1406	E.S.
2398	SS 2 RCP CL 3 300	300	20.05	1.047	13.9	201	1412	E.S.
2401	SS 2 RCP CL 3 300	300	20.05	1.047	14.1	201	1415	E.S.
2404	SS 2 RCP CL 3 300	300	8.79	1.138	5.9	201	1418	1419
2405	SS 2 RCP CL 3 375	375	20.05	1.272	17.1	201	1419	E.S.
2409	SS 2 RCP CL 3 300	300	8.80	1.137	5.9	201	1423	1419
2411	SS 3 RCP CL 4 300	300	20.05	5.000	83.1	200	1427	E.S.
2413	SS 3 RCP CL 4 300	300	20.05	5.000	67.2	200	1428	E.S.
2415	SS 3 RCP CL 4 300	300	20.05	5.000	49.0	200	1433	E.S.
2420	SS 2 RCP CL 3 300	300	20.05	2.513	37.8	200	1436	E.S.
2463	SS RG CL A 2 300	300	1.28	4.000	4.8	207	1459	1460
2464	STORM SEW WM REQ 300MM	300	15.82	4.000	50.5	207	1462	1461
2465	STORM SEW WM REQ 300MM	300	2.60	5.775	1.8	207	1463	1464
2466	STORM SEW WM REQ 300MM	300	12.71	5.000	8.1	207	1466	1465
2467	SS RG CL A 2 300	300	1.10	0.816	2.4	207	1469	1467
2468	STORM SEW WM REQ 300MM	300	23.79	1.248	56.8	207	1470	1468
2469	SS RG CL A 2 300	300	1.95	7.490	5.3	207	1471	1472
2470	STORM SEW WM REQ 300MM	300	18.10	5.779	35.8	207	1475	1474
2471	SS RG CL A 2 300	300	5.68	2.517	3.0	207	1476	E.S.
2472	STORM SEW WM REQ 300MM	300	7.71	5.000	3.8	207	1479	1480
2473	STORM SEW WM REQ 300MM	300	1.10	2.725	3.7	207	1601	1602
2476	STORM SEW WM REQ 300MM	300	14.31	6.619	36.7	207	1483	1477
2477	STORM SEW WM REQ 300MM	300	4.37	6.979	3.0	207	1484	1481
2478	STORM SEW WM REQ 300MM	300	13.76	9.800	44.8	207	1485	1507
2479	STORM SEW WM REQ 300MM	300	20.43	3.427	16.2	207	1486	1483
2480	STORM SEW WM REQ 300MM	300	13.94	7.008	12.0	207	1487	1601
2481	STORM SEW WM REQ 300MM	300	15.53	0.440	-	207	1518	3301
2482	STORM SEW WM REQ 300MM	300	6.59	0.440	2.2	207	1519	1466
2486	SS RG CL A 2 300	300	25.78	1.746	3.9	207	1489	1490
2487	SS RG CL A 2 300	300	6.83	1.611	1.0	207	1490	1479
2488	STORM SEW WM REQ 300MM	300	11.81	0.500	7.1	207	1491	1476
2489	SS RG CL A 2 300	300	7.75	0.516	3.1	208	1492	1493
2490	SS RG CL A 2 300	300	21.76	2.826	17.8	208	1493	1475
2491	SS RG CL A 2 300	300	22.98	2.146	53.7	209	1494	1470
2492	SS RG CL A 2 300	300	13.91	0.702	24.2	209	1497	1494
2493	STORM SEW WM REQ 300MM	300	5.12	1.952	3.9	209	1496	1495
2495	STORM SEW WM REQ 300MM	300	7.39	1.354	6.1	209	1495	1497
2496	SS RG CL A 2 300	300	0.88	0.440	0.4	206	1498	E.S.
2500	SS RG CL A 1 300	300	14.09	0.440	1.1	206	1501	1551
2504	SS RG CL A 1 300	300	14.23	0.440	0.9	206	1504	1498
2505	SS D I T1 200	200	1.88	0.560	0.2	206	1506	E.P.
2510	SS RG CL A 2 300	300	6.09	1.000	4.8	208	1510	1511
2511	SS RG CL A 2 300	300	0.79	5.000	0.6	208	1511	1514
2512	SS RG CL A 2 300	300	4.11	0.500	3.1	208	1512	1513
2513	SS RG CL A 2 300	300	5.38	3.715	4.3	208	1513	1514
2514	SS RG CL A 2 300	300	5.31	4.707	4.4	208	1516	1526
2515	SS RG CL A 2 300	300	1.58	3.045	0.2	208	1517	1525
2516	SS RG CL A 2 300	300	1.41	1.000	1.3	208	1515	E.P.
2518	SS RG CL A 2 300	300	1.34	0.440	1.2	208	1526	E.P.
2520	P CUL 2 RCE EQRS 750	610	10.67	0.141	6.3	208	E.S.	E.P.
2550	STORM SEW WM REQ 300MM	300	1.09	0.457	0.7	207	1480	E.P.

PIPE/ CULVERT NO.	DESCRIPTION	DIA. (MM)	LENGTH (M)	SLOPE (%)	TRENCH BACKFILL (CU M)	SHEET NO.	FROM STR. 1	TO STR. 2
2552	STORM SEW WM REQ 300MM	300	1.01	1.876	3.3	207	1602	1609
2553	STORM SEW WM REQ 300MM	300	4.23	7.023	12.0	207	1482	1601
2554	STORM SEW WM REQ 300MM	300	2.37	7.590	9.0	207	1481	1610
2565	SS 2 RCP CL 3 300	300	15.06	5.000	31.1	205	1377	E.P.
2568	SS 2 RCP CL 3 450	450	15.06	0.769	44.0	205	1380	E.P.
4187	P CUL 2 RCE EQRS 675	560	5.13	0.150	5.2	209	E.S.	E.P.
4206	STORM SEW WM REQ 900MM	900	34.60	0.101	32.0	208	E.S.	3297
4207	P CUL 2 RCE EQRS 900	740	63.77	0.422	17.3	208	3297	3298
4208	P CUL 2 RCE EQRS 675	560	12.36	0.150	8.7	209	3299	3222
4209	STORM SEW WM REQ 900MM	900	39.91	0.291	5.0	209	3222	3300
4210	P CUL 2 RCE EQRS 900	740	34.20	0.337	18.3	209	3300	E.P.
4211	STORM SEW WM REQ 900MM	900	21.24	0.100	21.3	208	3298	E14
4212	STORM SEW WM REQ 300MM	300	6.78	0.440	6.1	207	3301	1463
2383	SS 2 RCP CL 3 525	525	73.7	0.90	94.7	202	1397	1398
2384	SS 2 RCP CL 3 525	525	73.7	0.90	93.4	202	1396	1397
2388	SS 2 RCP CL 3 600	600	73.7	0.90	93.2	202	1398	1402
2389	SS 2 RCP CL 3 600	600	73.7	0.90	120.4	201	1402	1403
2390	SS 2 RCP CL 3 750	750	73.7	0.90	116.4	201	1403	1404
2393	SS 2 RCP CL 3 750	750	73.7	0.90	117.9	201	1404	1407
2397	SS 2 RCP CL 3 300	300	2.7	0.77	4.8	201	1411	1407
2399	SS 2 RCP CL 3 750	750	73.7	0.90	162.9	201	1407	1413
2400	SS 2 RCP CL 3 300	300	3.3	0.77	1.8	201	1414	1413
2402	SS 2 RCP CL 3 900	900	41.0	0.85	88.1	201	1413	1417
2403	SS 2 RCP CL 3 1200	1200	8.4	0.85	10.7	201	1417	1416
2407	SS 2 RCP CL 3 450	450	3.3	0.81	1.9	201	1421	1416
2410	SS 2 RCP CL 3 1200	1200	5.7	0.85	23.7	201	1416	1424
2412	SS 3 RCP CL 4 300	300	1.3	0.44	8.9	200	1426	1425
2414	SS 3 RCP CL 4 300	300	1.3	3.85	4.0	200	1430	1429
2416	SS 3 RCP CL 4 300	300	1.3	5.00	2.9	200	1431	1432
2417	SS 3 RCP CL4 1650	1650	73.7	0.05	510.0	200	1429	1425
2418	SS 2 RCP CL 2 1650	1650	73.7	0.05	163.7	200	1434	1432
2419	SS 2 RCP CL 2 1650	1650	73.7	0.05	305.7	200	1432	1429
2421	SS 2 RCP CL 2 1500	1500	53.1	0.06	222.4	200	1424	1455
2422	SS 2 RCP CL 3 300	300	1.3	2.15	0.8	200	1435	1434
2423	SS 2 RCP CL 2 1500	1500	11.5	0.04	37.3	200	1455	1434
2424	SS 2 RCP CL 3 300	300	2.2	0.49	5.7	201	1437	1424
2426	SS 3 RCP CL 4 1650	1650	73.4	0.05	307.1	199	1439	1440
2427	SS 3 RCP CL 4 1650	1650	73.7	0.05	349.7	199	1438	1439
2428	SS 3 RCP CL4 1650	1650	34.7	0.05	296.0	200	1425	1457
2430	SS 3 RCP CL 4 1650	1650	21.2	0.05	80.8	199	1440	1442
2462	SS 3 RCP CL 4 1650	1650	112.8	0.05	482.9	199	1457	1438

1

* - VERTICAL RISE OF ELLIPTICAL PIPE
E.P. - EXISTING PIPE
E.S. - EXISTING STRUCTURE

NOTE:
1. CONNECTIONS TO EXISTING PIPES MAY REQUIRE CONCRETE COLLARS, AS DETERMINED BY THE ENGINEER. SEE DISTRICT ONE STANDARD DETAIL BD-7 FOR DETAILS.

REVISIONS	
NAME	DATE
1 KV	01/04/06

ILLINOIS DEPARTMENT OF TRANSPORTATION
F.A.I. ROUTE 80/94 (KINGERY EXPRESSWAY)
EB & WB INSIDE LANES (MAINLINE) CONSTRUCTION
COOK COUNTY

DRAINAGE SCHEDULE II
PROPOSED PIPES

SCALE: NONE
DATE: 1/4/06
DRAWN BY: SN
CHECKED BY: MD

TENG
TENG & ASSOCIATES, INC.
ENGINEERS/ARCHITECTS/PLANNERS
CHICAGO, ILLINOIS

..\DRIT1012A.DGN, ..\DRIT1012A.DGN, ..\AB990012A.DGN
12-28-2005, 16:00:08 T:\DOCUMENT\93750\CIVL\DGN\DUT10452A.DGN
1 2 3 4 5 6 7 8 9 10 11 12 13 14 15 16 17 18 19 20 21 22 23 24 25 26 27 28 29 30 31 32 33 34 35 36 37 38 39 40 41 42 43 44 45 46 47 48 49 50 51 52 53 54 55 56 57 58 59 60 61 62 63
VARSHNKZ

F.A.I. RTE.	SECTION	COUNTY	TOTAL SHEETS	SHEET NO.
80/94	*	COOK	631	212
STA.		TO STA.		
FED. ROAD DIST. NO.		ILLINOIS	FED. AID PROJECT	
* (2425 & 2626) R-2			CONTRACT NO. 62111	

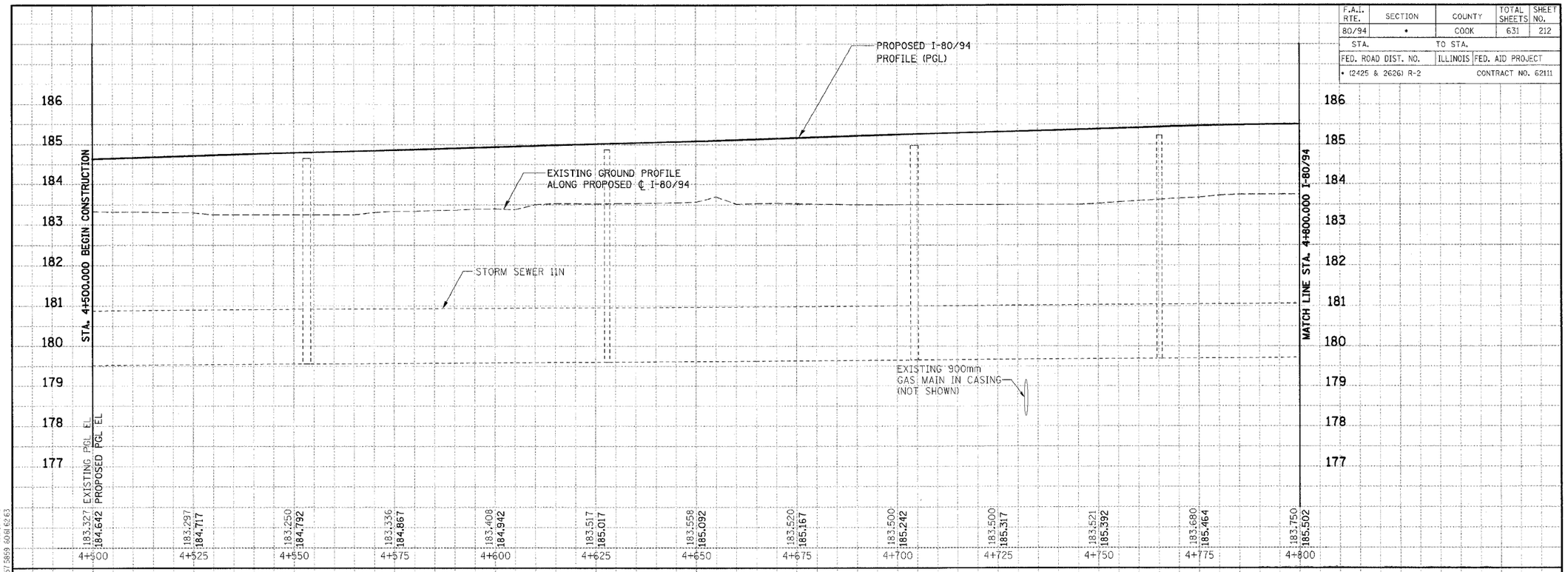

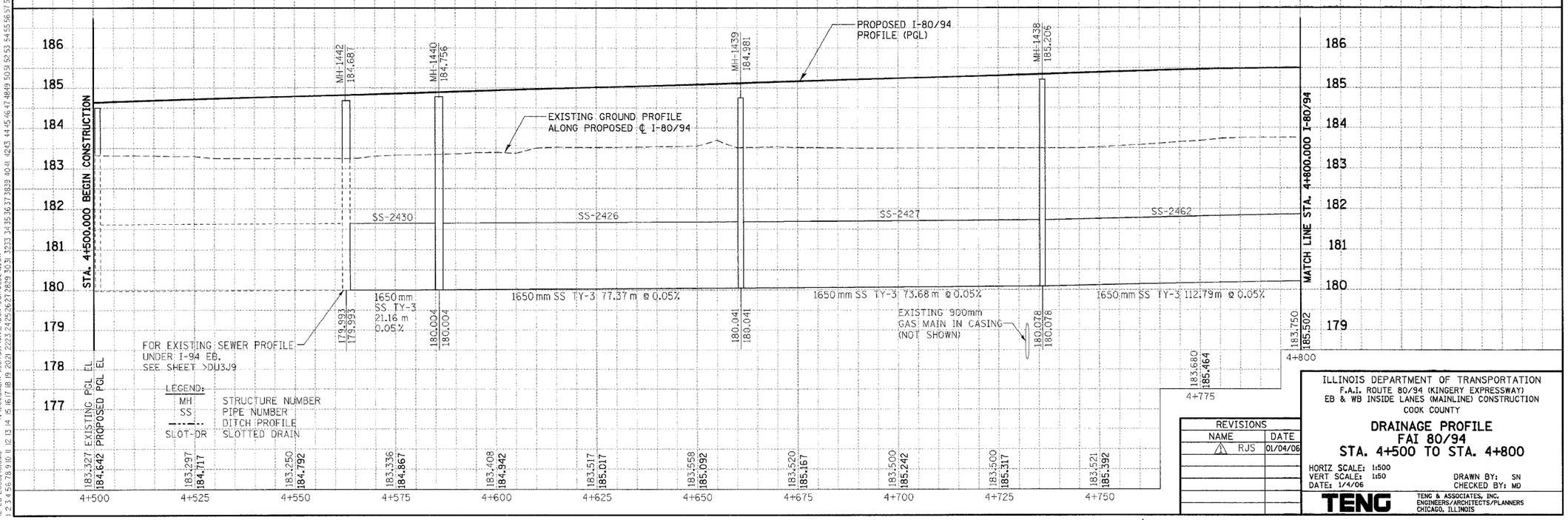

PRELIMINARY	BY	DATE
SURVEY	SURVEYED	
	PLOTTED	
NOTE BOOK	TEMPLATE	
	AREAS	
NO.	AREAS CHECKED	

ORIGINAL	BY	DATE
SURVEY	SURVEYED	
	PLOTTED	
NOTE BOOK	TEMPLATE	
	AREAS	
NO.	AREAS CHECKED	

REVISIONS	
NAME	DATE
△1 RJS	01/04/06

ILLINOIS DEPARTMENT OF TRANSPORTATION
F.A.I. ROUTE 80/94 (KINGERY EXPRESSWAY)
EB & WB INSIDE LANES (MAINLINE) CONSTRUCTION
COOK COUNTY

DRAINAGE PROFILE
FAI 80/94
STA. 4+500 TO STA. 4+800

HORIZ SCALE: 1:500
VERT SCALE: 1:50
DATE: 1/4/06

DRAWN BY: SN
CHECKED BY: MD

TENG
TENG & ASSOCIATES, INC.
ENGINEERS/ARCHITECTS/PLANNERS
CHICAGO, ILLINOIS

△1 ENTIRE SHEET REVISED 01/04/2006, RJS

..\FR70052A.DGN, ..\DR70052A.DGN, ..\FR70012A.DGN, ..\FR70012A.DGN, ..\FR70012A.DGN, ..\FR70012A.DGN, ..\DR70052A.DGN, ..\DR70052A.DGN, ..\AB99090ZA.DGN, ..\DR70052A.DGN
12-28-2005, 16:06 T:\DOCUMENT\93750\DGN\DU3J02A.DGN
YARSINKZ

F.A.I. RTE.	SECTION	COUNTY	TOTAL SHEETS	SHEET NO.
80/94	*	COOK	631	213
STA.		TO STA.		
FED. ROAD DIST. NO.		ILLINOIS	FED. AID PROJECT	
* (2425 & 2626) R-2			CONTRACT NO. 62111	

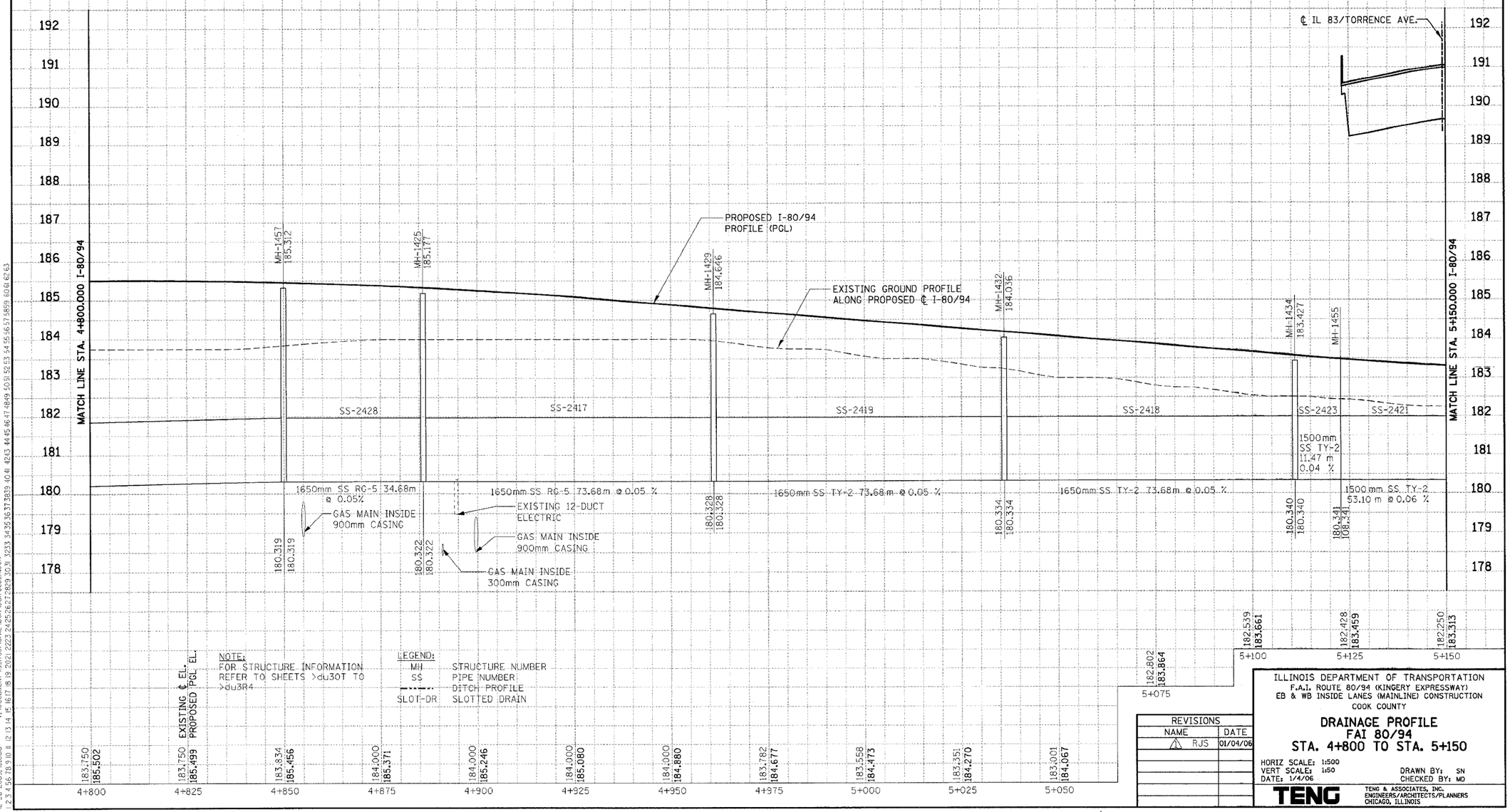

NOTE:
FOR STRUCTURE INFORMATION REFER TO SHEETS >du30T TO >du3R4

LEGEND:

MH	STRUCTURE NUMBER
SS	PIPE NUMBER
---·---	DITCH PROFILE
SLOT-DR	SLOTTED DRAIN

REVISIONS	
NAME	DATE
⚠ RJS	01/04/06

ILLINOIS DEPARTMENT OF TRANSPORTATION
F.A.I. ROUTE 80/94 (KINGERY EXPRESSWAY)
EB & WB INSIDE LANES (MAINLINE) CONSTRUCTION
COOK COUNTY

DRAINAGE PROFILE
FAI 80/94
STA. 4+800 TO STA. 5+150

HORIZ SCALE: 1:500
VERT SCALE: 1:50
DATE: 1/4/06

DRAWN BY: SN
CHECKED BY: MD

TENG
TENG & ASSOCIATES, INC.
ENGINEERS/ARCHITECTS/PLANNERS
CHICAGO, ILLINOIS

⚠ ENTIRE SHEET REVISED 01/04/2006, RJS

PRELIMINARY SURVEY	BY	DATE
SURVEYED		
PLOTTED		
NOTE BOOK		
TEMPLATE		
AREAS		
AREAS CHECKED		
NO.		

ORIGINAL SURVEY	BY	DATE
SURVEYED		
PLOTTED		
NOTE BOOK		
TEMPLATE		
AREAS		
AREAS CHECKED		
NO.		

VARSHNCZ
..\VDUT0232A.DGN, ..\A89K0102A.DGN
..\VFRT0012A.DGN, ..\VDRT0052A.DGN, ..\VFRT0012A.DGN, ..\VFRT0012A.DGN, ..\VFRT0012A.DGN, ..\VFRT0012A.DGN, ..\VFRT0012A.DGN
12-28-2005, fcdb6 T:\DOCUMENT\93750\CIVIL\DGN\DUT0252A.DGN

F.A.I. RTE.	SECTION	COUNTY	TOTAL SHEETS	SHEET NO.
80/94	*	COOK	631	214
STA.		TO STA.		
FED. ROAD DIST. NO.		ILLINOIS	FED. AID PROJECT	
* (2425 & 2626) R-2			CONTRACT NO. 62111	

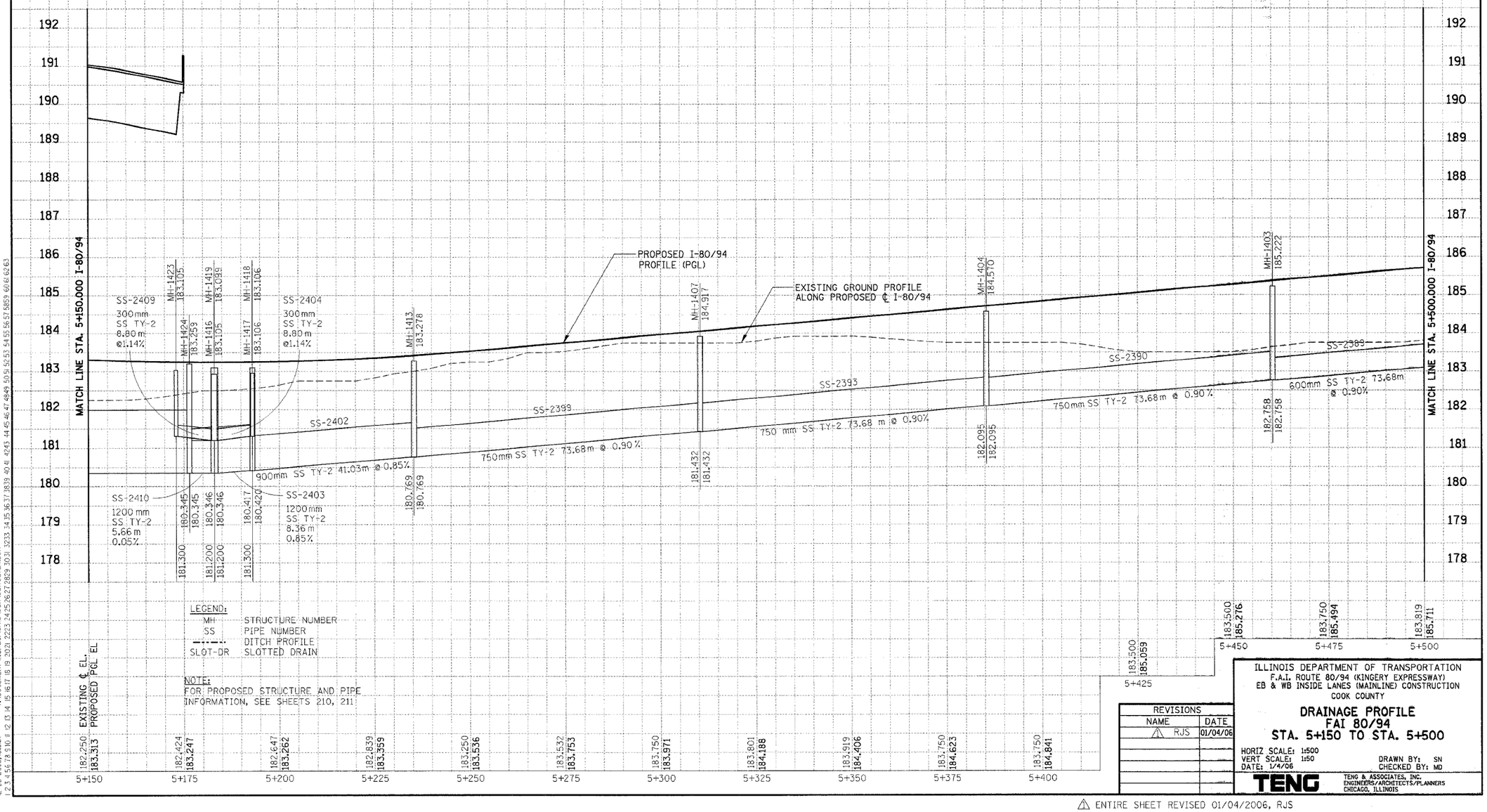

LEGEND:

MH	STRUCTURE NUMBER
SS	PIPE NUMBER
	DITCH PROFILE
SLOT-DR	SLOTTED DRAIN

NOTE:
FOR PROPOSED STRUCTURE AND PIPE INFORMATION, SEE SHEETS 210, 211

REVISIONS	
NAME	DATE
⚠ RJS	01/04/06

ILLINOIS DEPARTMENT OF TRANSPORTATION
F.A.I. ROUTE 80/94 (KINGERY EXPRESSWAY)
EB & WB INSIDE LANES (MAINLINE) CONSTRUCTION
COOK COUNTY

DRAINAGE PROFILE
FAI 80/94
STA. 5+150 TO STA. 5+500

HORIZ SCALE: 1:500
VERT SCALE: 1:50
DATE: 1/4/06

DRAWN BY: SN
CHECKED BY: MD

TENG
TENG & ASSOCIATES, INC.
ENGINEERS/ARCHITECTS/PLANNERS
CHICAGO, ILLINOIS

⚠ ENTIRE SHEET REVISED 01/04/2006, RJS

PRELIMINARY	BY	DATE
SURVEY SURVEYED		
SURVEY PLOTTED		
NOTE BOOK/TEMPLATE		
AREAS		
AREAS CHECKED		
NO.		

ORIGINAL	BY	DATE
SURVEY SURVEYED		
SURVEY PLOTTED		
NOTE BOOK/TEMPLATE		
AREAS		
AREAS CHECKED		
NO.		

..\FRT0052A.DGN, ..\FRT0052A.DGN, ..\FRT0012A.DGN, ..\FRT0012A.DGN, ..\FRT0002A.DGN, ..\FRT0002A.DGN, ..\A99S0012A.DGN
12-28-2005,16:08:07 T:\DOCUMENT\93750\CIVIL\DGN\DJ070272A.DGN
VARHNWZ

F.A.I. RTE.	SECTION	COUNTY	TOTAL SHEETS	SHEET NO.
80/94	*	COOK	631	215
STA.		TO STA.		
FED. ROAD DIST. NO.		ILLINOIS	FED. AID PROJECT	
* (2425 & 2626) R-2			CONTRACT NO. 62111	

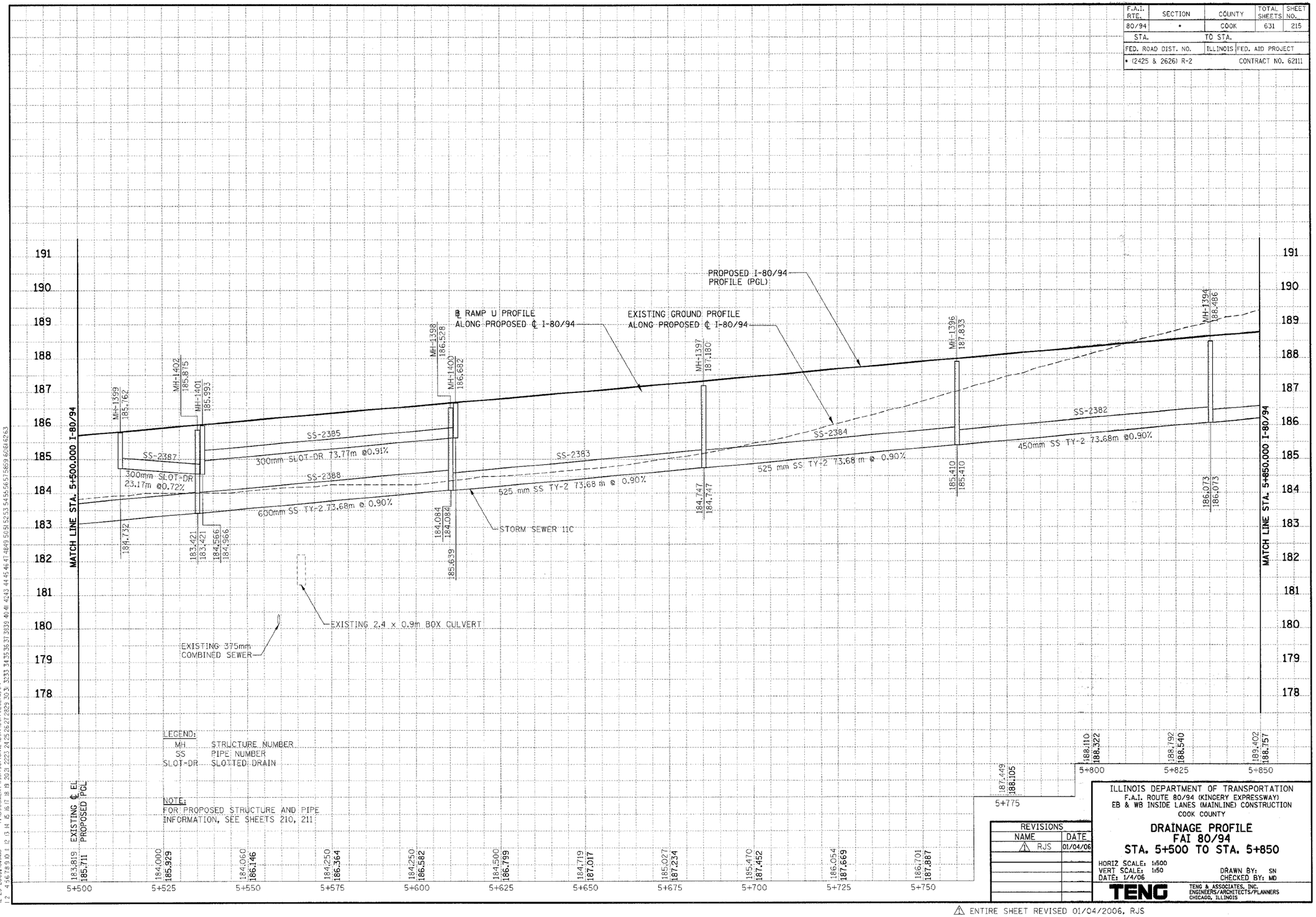

LEGEND:
MH STRUCTURE NUMBER
SS PIPE NUMBER
SLOT-DR SLOTTED DRAIN

NOTE:
FOR PROPOSED STRUCTURE AND PIPE INFORMATION, SEE SHEETS 210, 211

REVISIONS	
NAME	DATE
⚠ RJS	01/04/06

ILLINOIS DEPARTMENT OF TRANSPORTATION
F.A.I. ROUTE 80/94 (KINGERY EXPRESSWAY)
EB & WB INSIDE LANES (MAINLINE) CONSTRUCTION
COOK COUNTY

DRAINAGE PROFILE
FAI 80/94
STA. 5+500 TO STA. 5+850

HORIZ SCALE: 1:500
VERT SCALE: 1:50
DATE: 1/4/06
DRAWN BY: SN
CHECKED BY: MD

TENG
TENG & ASSOCIATES, INC.
ENGINEERS/ARCHITECTS/PLANNERS
CHICAGO, ILLINOIS

⚠ ENTIRE SHEET REVISED 01/04/2006, RJS

PRELIMINARY SURVEY: SURVEYED, PLOTTED, NOTE BOOK, TEMPLATE, AREAS, AREAS CHECKED, NO. — BY — DATE

ORIGINAL SURVEY: SURVEYED, PLOTTED, NOTE BOOK, TEMPLATE, AREAS, AREAS CHECKED, NO. — BY — DATE

..\FRIT0092A.DGN, ..\DRIT0052A.DGN, ..\FRIT0092A.DGN, ..\FRIT0002A.DGN, ..\FRIT0092A.DGN, ..\FRIT0092A.DGN, ..\A39900I2A.DGN
12-28-2005, 16:09:18 T:\DOCUMENT\95750\CIVIL\DGN\DUI70252A.DGN
VARSHNEY

F.A.I. RTE.	SECTION	COUNTY	TOTAL SHEETS	SHEET NO.
	*	COOK	631	339A
STA.		TO STA.		
FED. ROAD DIST. NO.		ILLINOIS	FED. AID PROJECT	

* (2425 & 2626) R-2 CONTRACT NO. 62111

BENCHMARK:
TBM "M" Chiseled square cut in southwest wingwall of existing IL Rte 83 (Torrence Avenue) bridge over I-80. El. 188.209

EXISTING STRUCTURE:
Single 1.2 m x 0.9 m x 86 m (Approx.) long Concrete Box Culvert. Route/ Section and date built are unknown.

STAGING:
Traffic to be maintained utilizing staged construction. See Sheet BC-04.

SALVAGE:
None.

DESIGN SPECIFICATIONS:
2002 AASHTO Standard Specifications for Highway Bridges.

DESIGN LOADING:
Roadway Live Loads HS20-44 & Alt.
Future Wearing Surface = 2.4 kN/m²
Precast alternate not allowed.

DESIGN STRESSES:
Concrete, f'c = 24 MPa
Reinforcement, fy = 420 MPa

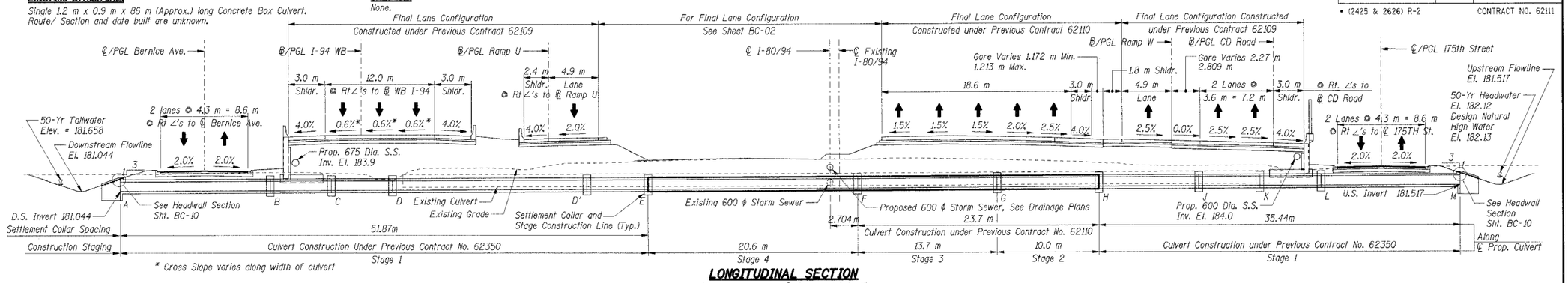

* Cross Slope varies along width of culvert

LONGITUDINAL SECTION

(Looking East along ℄ Proposed Culvert)

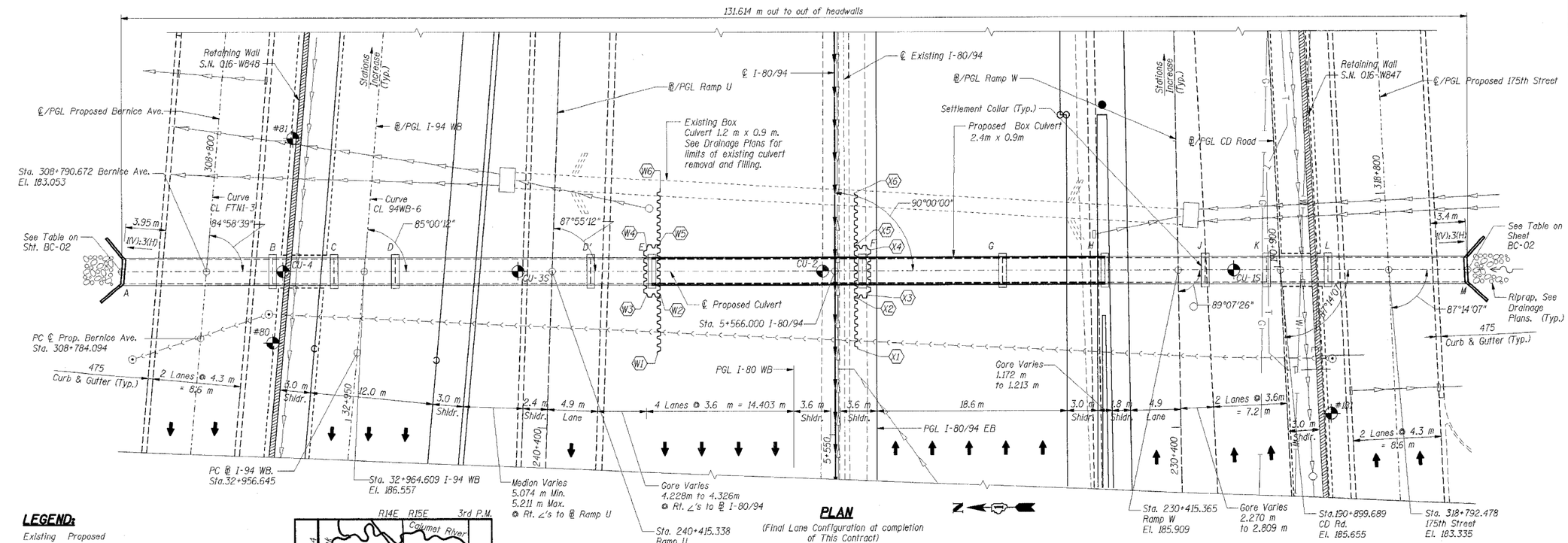

PLAN

(Final Lane Configuration at completion of This Contract)

LEGEND:

Existing	Proposed	
		Storm Sewer
		Combined Sewer
		Catch Basin
		Manhole
		Inlet
		Retaining Wall
		Pavement
		Gas Main
		Water Main
		Buried Electric
		Telephone
		Temporary Soil Retention System

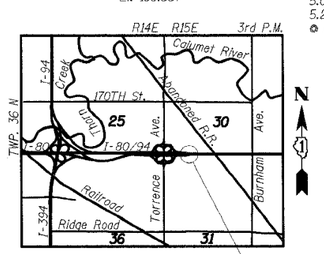

LOCATION MAP

Notes:
1. See Sht. BC-02 for Index of Sheets.
2. For Temporary Soil Retention System workpoints, see Sheet BC-02. For additional details, see Sheet BC-05.
3. All dimensions are in millimeters (mm) except as noted.

STATE OF ILLINOIS
VINOD C. PATEL
081-004428
CHICAGO, IL
LICENSED STRUCTURAL ENGINEER
DATE 12/30/2005
EXP. 11/30/2006

SHT. BC-01 OF 11

REVISIONS	
NAME	DATE

ILLINOIS DEPARTMENT OF TRANSPORTATION
F.A.I. ROUTE 80/94 (KINGERY EXPRESSWAY)
EB & WB INSIDE LANES (MAINLINE) CONSTRUCTION
BOX CULVERT
STRUCTURE NO. 016-C013 STA. 5+566.000
SECTIONS 2001-167R AND (2425 & 2626) R-1
COOK COUNTY

GENERAL PLAN & LONGITUDINAL SECTION

DATE: 1/4/06
DRAWN BY: OD
CHECKED BY: MJK

TENG
TENG & ASSOCIATES, INC.
ENGINEERS/ARCHITECTS/PLANNERS
CHICAGO, ILLINOIS

1 Added Sheet 01/04/2006

..\RB99G02A.DGN, ..\DR13002A.DGN, ..\DC99R02A.DGN, ..\VR13002A.DGN, ..\DR13002A.DGN, ..\SL99R02A.DGN, ..\DR99G02A.DGN, ..\DR99R02A.DGN, ..\VR99R02A.DGN
12-30-2005, 10:32:20 T:\DOCUMENTS\750K\STRUCT\DGN\BC17002A.DGN VARSHNIZ
1 2 3 4 5 6 7 8 9 10 11 12 13 14 15 16 17 18 19 20 21 22 23 24 25 26 27 28 29 30 31 32 33 34 35 36 37 38 39 40 41 42 43 44 45 46 47 48 49 50 51 52 53 54 55 56 57 58 59 60 61 62 63

F.A.I. RTE.	SECTION	COUNTY	TOTAL SHEETS	SHEET NO.
	*	COOK	631	339B
STA.		TO STA.		
FED. ROAD DIST. NO.		ILLINOIS	FED. AID PROJECT	

* (2425 & 2626) R-2 CONTRACT NO. 62111

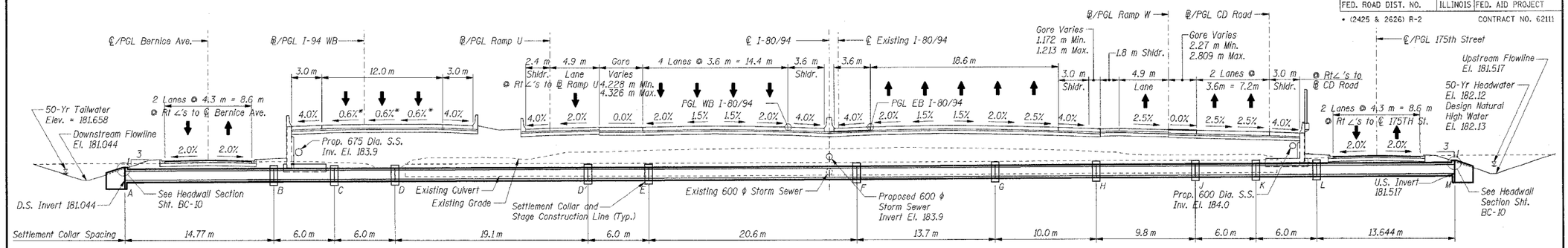

LONGITUDINAL SECTION

(Final Configuration at completion of This Contract)
(Looking East along ℄ Proposed Culvert)

TEMPORARY SOIL RETENTION SYSTEM LOCATIONS

(Roadway Reference ℄ I-80/94)

Location	Station	Offset (m)
W1	5+557.85	17.396Lt.
W2	5+564.35	17.396Lt.
W3	5+564.35	18.396Lt.
W4	5+567.65	18.396Lt.
W5	5+567.65	17.396Lt.
W6	5+574.15	17.396Lt.

Location	Station	Offset (m)
X1	5+558.40	2.204Rt.
X2	5+564.35	2.204Rt.
X3	5+564.35	3.204Rt.
X4	5+567.65	3.204Rt.
X5	5+567.65	2.204Rt.
X6	5+573.60	2.204Rt.

~~Location~~	~~Station~~	~~Offset (m)~~
~~Y1~~	~~5+558.60~~	~~15.904Rt.~~
~~Y2~~	~~5+564.35~~	~~15.904Rt.~~
~~Y3~~	~~5+564.35~~	~~16.904Rt.~~
~~Y4~~	~~5+567.65~~	~~16.904Rt.~~
~~Y5~~	~~5+567.65~~	~~15.904Rt.~~
~~Y6~~	~~5+573.40~~	~~15.904Rt.~~

~~Location~~	~~Station~~	~~Offset (m)~~
~~Z1~~	~~5+558.85~~	~~25.904Rt.~~
~~Z2~~	~~5+564.35~~	~~25.904Rt.~~
~~Z3~~	~~5+564.35~~	~~26.904Rt.~~
~~Z4~~	~~5+567.65~~	~~26.904Rt.~~
~~Z5~~	~~5+567.65~~	~~25.904Rt.~~
~~Z6~~	~~5+573.15~~	~~25.904Rt.~~

TOTAL BILL OF MATERIALS

Item	Unit	Total
Concrete Box Culverts	Cu m	32.2
Reinforcement Bars	kg	4,580
Temporary Soil Retention System	Sq m	37
*Removal of Temporary Soil Retention System	Sq m	58

*Installed by others under Contracts 62350 and 62110

CULVERT LAYOUT & PROFILE DATA

Location		Roadway Reference	Station	Offset (m)	I-80/94		Invert Elevation
ID	Description				Station	Offset (m)	
A	Downstream	I-94 WB	32+962.526	23.630 Lt.	5+566.000	69.766 Lt.	181.044
B	Settlement Collar	I-94 WB	32+963.826	8.917 Lt.	5+566.000	54.996 Lt.	181.097
C	Settlement Collar	I-94 WB	32+964.351	2.940 Lt.	5+566.000	48.996 Lt.	181.153
D	Settlement Collar	I-94 WB	32+964.874	3.038 Rt.	5+566.000	42.996 Lt.	181.209
D'	Settlement Collar	I-94 WB	32+966.524	22.066 Rt.	5+566.000	23.896 Lt.	181.277
E	Settlement Collar	I-94 WB	32+967.037	28.043 Rt.	5+566.000	17.896 Lt.	181.298
F	Settlement Collar				5+566.000	2.704 Rt.	181.372
G	Settlement Collar				5+566.000	16.404 Rt.	181.420
H	Settlement Collar	CD Road EB	190+900.516	17.123 Lt.	5+566.000	26.404 Rt.	181.456
J	Settlement Collar	CD Road EB	190+900.043	7.334 Lt.	5+566.000	36.204 Rt.	181.491
K	Settlement Collar	CD Road EB	190+899.754	1.341 Lt.	5+566.000	42.204 Rt.	181.477
L	Settlement Collar	CD Road EB	190+899.464	4.652 Rt.	5+566.000	48.204 Rt.	181.463
M	Upstream	CD Road EB	190+898.806	18.280 Rt.	5+566.000	61.848 Rt.	181.512

WATERWAY INFORMATION

Drainage Area = 35.88 Ha Low Grade El. = 186.286 at Station: 5+566 Max. Recorded H.W.E. = N/A

Flood	Frequency (Yr.)	Discharge (cms)	Waterway Opening (Sq. m)		Natural H.W.E. (m)	Created Head (m)		Headwater Elevation (m)	
			Existing	Proposed		Existing	Proposed	Existing	Proposed
	10	1.05	1.110	1.155	182.00	0.01	-0.07	183.16	181.93
Design	50	1.86	1.110	1.477	182.13	0.31	0.02	183.50	182.12
Base	100	2.46	1.110	1.667	182.21	-	0.03	-	182.24
Overtopping	>500								
Max. Calc.	500	4.18	1.110	2.160	182.38	-	0.20	-	182.58

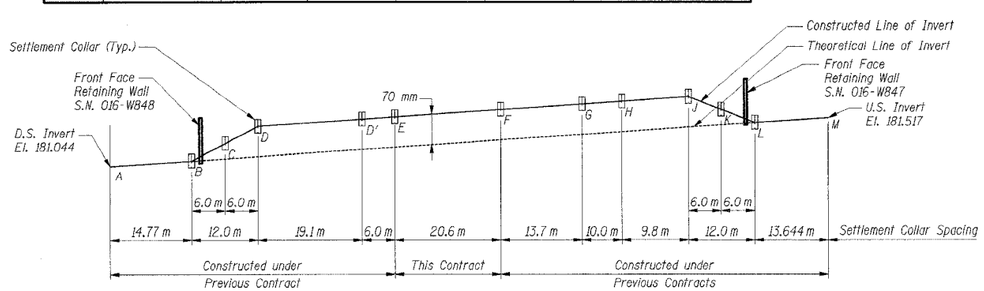

CULVERT PROFILE

(Looking East)
See Table above for Constructed Invert Elevations

General Notes:

1. All dimensions are in millimeters (mm) except as noted.
2. All construction joints shall be bonded.
3. Reinforcement bars shall conform to the requirements of AASHTO M31 or M322 Grade 400.
4. Precast culvert alternate is not allowed.
5. Exposed edges shall have 20 mm chamfer.
6. For backfilling and embankment, see Standard Specifications.
7. Layout of slope protection system may be varied in the Field to suit ground conditions as directed by the Engineer.
8. The design or design information shown in the plans relative to the temporary structures is provided for the existing and/or proposed conditions including traffic patterns and locations shown or detailed in the plans. If the actual existing and/or proposed conditions including traffic patterns and locations vary from those shown in the plans, the Contractor shall verify the design parameters for the temporary structures and submit the design (or redesign if any) for Engineer's approval. The design/redesign including calculations shall be sealed and signed by a structural engineer licensed in the State of Illinois.

INDEX OF SHEETS

BC-01 GENERAL PLAN & LONGITUDINAL SECTION
BC-02 INDEX OF SHEETS, GENERAL NOTES, WATERWAY INFORMATION & TOTAL BILL OF MATERIAL
BC-03 PROFILE GRADE LINES
BC-04 CONSTRUCTION STAGING SEQUENCE & SECTIONS
BC-05 TEMPORARY SOIL RETENTION SYSTEM
BC-06 TOP & BOTTOM SLAB PLANS & WALL ELEVATIONS I ***
BC-07 TOP & BOTTOM SLAB PLANS & WALL ELEVATIONS II
BC-08 TOP & BOTTOM SLAB PLANS & WALL ELEVATIONS III ***
BC-09 SECTION THROUGH BARREL & SETTLEMENT COLLAR DETAILS
BC-10 HEADWALL DETAILS ***
BC-11 BORING LOGS

*** FOR INFORMATION ONLY

SHT. BC-02 OF 11

REVISIONS	
NAME	DATE

ILLINOIS DEPARTMENT OF TRANSPORTATION
F.A.I. ROUTE 80/94 (KINGERY EXPRESSWAY)
EB & WB INSIDE LANES (MAINLINE) CONSTRUCTION
BOX CULVERT
STRUCTURE NO. 016-C013 STA. 5+566.000
SECTIONS 2001-167R AND (2425 & 2626) R-1
COOK COUNTY

INDEX OF SHEETS, GENERAL NOTES, WATERWAY INFORMATION & TOTAL BILL OF MATERIAL

DATE: 1/4/06
DRAWN BY: OD
CHECKED BY: MJK

TENG & ASSOCIATES, INC.
ENGINEERS/ARCHITECTS/PLANNERS
CHICAGO, ILLINOIS

1 Added Sheet 01/04/2006

VARSHNKZ
39 60B 62 63
-\AB99G012A.DGN, -\BC99R012A.DGN, -\BC99R022A.DGN
02-30-2005, 10:25:19 T:\DOCUMENT\93753\STRUCT\DGN\BC70032A.DGN
1 2 3 4 5 6 7 8 9 10 11 12 13 14 15 16 17 18 19 20 21 22 23 24 25 26 27 28 29 30 31 32 33 34 35 36 37 38 39 40 41 42 43 44 45 46 47 48 49 50 51 52 53 54 55 56 57 58 59 60 61 62 63

F.A.I. RTE.	SECTION	COUNTY	TOTAL SHEETS	SHEET NO.
	*	COOK	631	339C
STA.		TO STA.		
FED. ROAD DIST. NO.		ILLINOIS	FED. AID PROJECT	

* (2425 & 2626) R-2 CONTRACT NO. 62111

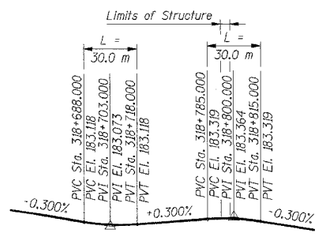

PGL 175th STREET ***

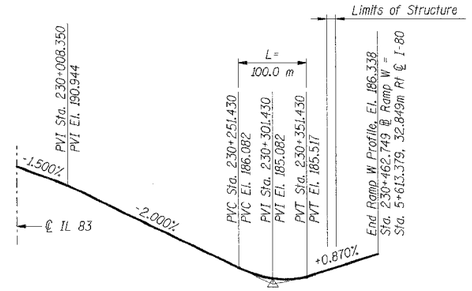

PGL RAMP W ***

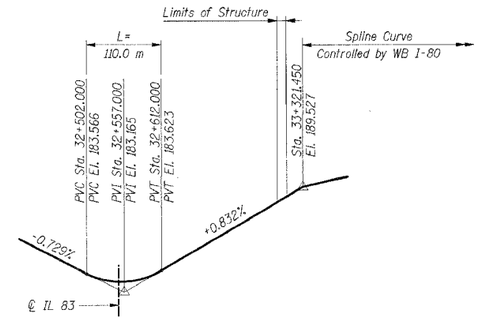

PGL I-94 WB ***

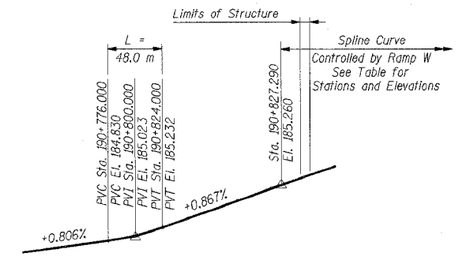

PGL CD ROAD EB ***

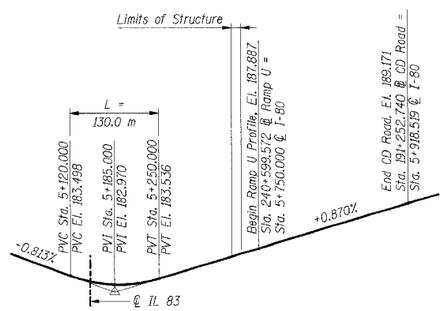

PGL I-80/94

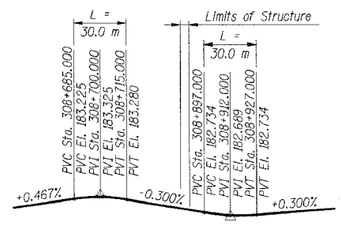

PGL BERNICE AVENUE ***

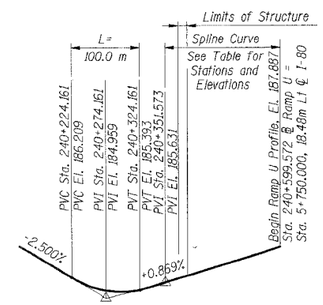

PGL RAMP U

PGL RAMP U

SPLINE CURVE DATA	
Station	Elevation
240+351.566	185.631
240+355.000	185.661
240+360.000	185.705
240+365.000	185.748
240+370.000	185.792
240+375.000	185.835
240+380.000	185.879
240+385.000	185.922
240+390.000	185.966
240+395.000	186.009
240+400.000	186.053
240+405.000	186.096
240+410.000	186.140
240+415.000	186.183
240+420.000	186.227
240+425.000	186.270

Limits of Structure

PGL CD ROAD EB ***

SPLINE CURVE DATA	
Station	Elevation
190+827.290	185.260
190+830.000	185.284
190+835.000	185.327
190+840.000	185.371
190+845.000	185.414
190+850.000	185.458
190+855.000	185.501
190+860.000	185.545
190+865.000	185.588
190+870.000	185.631
190+875.000	185.675
190+880.000	185.718
190+885.000	185.762
190+890.000	185.805
190+895.000	185.849
190+900.000	185.892
190+905.000	185.936
190+910.000	185.979
190+915.000	186.023
190+920.000	186.066
190+925.000	186.110

Limits of Structure

*** For Information Only

PROP. CURVE CL 94WB-6 ***

P.I. Sta. = 33+089.438
Δ = 5°04'08" (Lt.)
R = 3,000.000 m
T = 132.792 m
L = 265.412 m
E = 2.938 m
P.C. Sta. = 32+956.645
P.T. Sta. = 33+222.057

PROP. CURVE CL FTN1-3 ***

P.I. Sta. = 308+976.233
Δ = 7°22'01" (Lt.)
R = 2,984.620 m
T = 192.140 m
L = 383.750 m
E = 6.178 m
P.C. Sta. = 308+784.094
P.T. Sta. = 308+167.843

Notes:
1. All dimensions are in millimeters (mm) except as noted.

SHT. BC-03 OF 11

REVISIONS	
NAME	DATE

ILLINOIS DEPARTMENT OF TRANSPORTATION
F.A.I. ROUTE 80/94 (KINGERY EXPRESSWAY)
EB & WB INSIDE LANES (MAINLINE) CONSTRUCTION
BOX CULVERT
STRUCTURE NO. 016-C013 STA. 5+566.000
SECTIONS 2001-167R AND (2425 & 2626) R-1
COOK COUNTY

PROFILE GRADE LINES

DATE: 1/4/06
DRAWN BY: OD
CHECKED BY: MJK

TENG
TENG & ASSOCIATES, INC.
ENGINEERS/ARCHITECTS/PLANNERS
CHICAGO, ILLINOIS

1 Added Sheet 01/04/2006

..\A69900G2A.DGN, ..\BC99R042A.DGN, ..\BC99R042A.DGN
12-30-2005, 10:25:20 T:\DOCUMENT\93150\STRUCT\DGN\BC170052A.DGN
VARSHNKZ

F.A.I. RTE.	SECTION	COUNTY	TOTAL SHEETS	SHEET NO.
	*	COOK	631	339D
STA.		TO STA.		
FED. ROAD DIST. NO.		ILLINOIS	FED. AID PROJECT	

* (2425 & 2626) R-2 CONTRACT NO. 62111

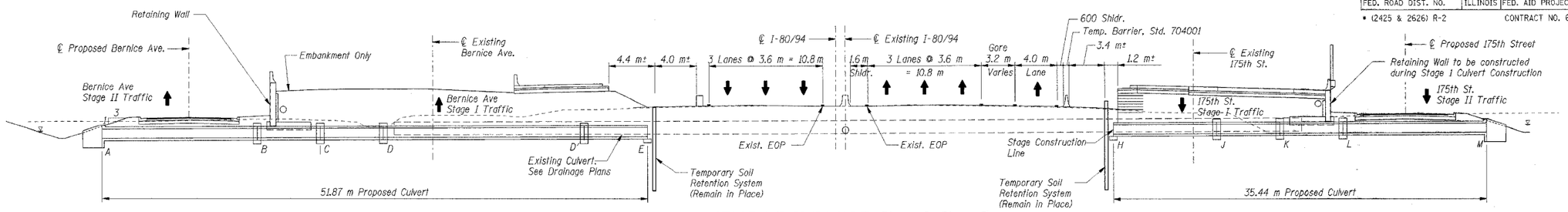

STAGE 1 (I-80/94 M.O.T. Phase I, Stage I)
(BY OTHERS, PREVIOUS CONTRACT 62350)

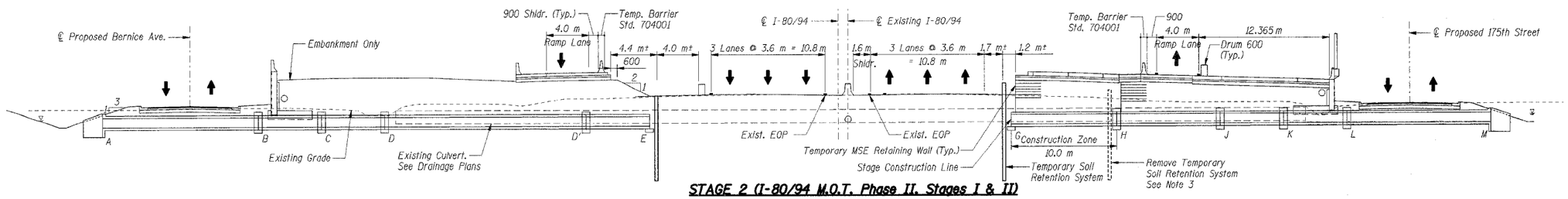

STAGE 2 (I-80/94 M.O.T. Phase II, Stages I & II)
(BY OTHERS, PREVIOUS CONTRACT 62110)

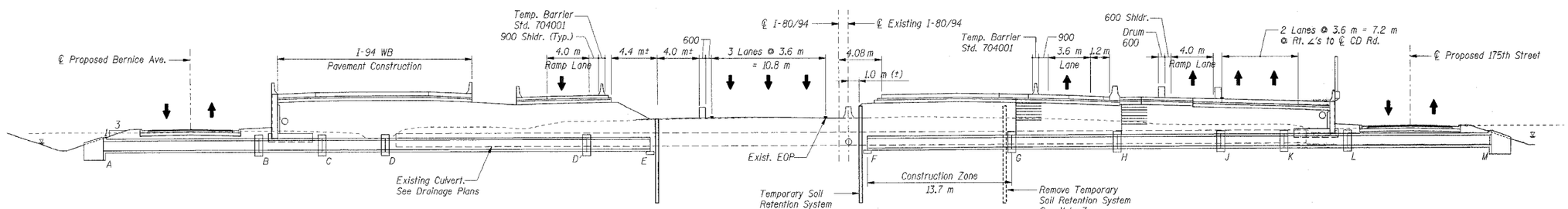

STAGE 3 (I-80/94 M.O.T. Phase II, Stages III & IV)
(BY OTHERS, PREVIOUS CONTRACT 62110)

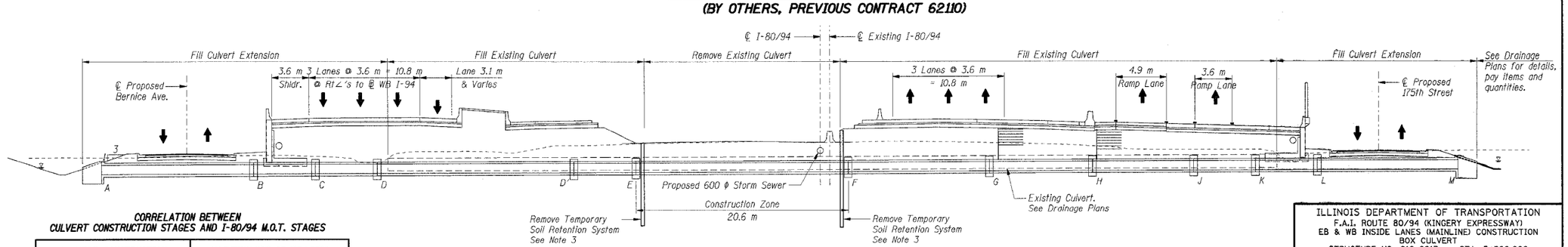

STAGE 4 (I-80/94 M.O.T. Phase III, Stage I)
(THIS CONTRACT)

CORRELATION BETWEEN CULVERT CONSTRUCTION STAGES AND I-80/94 M.O.T. STAGES

CULVERT CONSTRUCTION	MAINTENANCE OF TRAFFIC (For Culvert, Embankment & Pavement Construction)
Stage 1	Phase I, Stage I
Stage 2	Phase II, Stage I & II
Stage 3	Phase II, Stage III & IV
Stage 4	Phase III, Stage I

Notes:

1. All dimensions in millimeters (mm) except as noted.
2. EOP denotes Edge of Pavement
3. See Sht. BC-05 for details of Temporary Soil Retention System at stage Construction Line.

SHT. BC-04 OF 11

REVISIONS	
NAME	DATE

ILLINOIS DEPARTMENT OF TRANSPORTATION
F.A.I. ROUTE 80/94 (KINGERY EXPRESSWAY)
EB & WB INSIDE LANES (MAINLINE) CONSTRUCTION
BOX CULVERT
STRUCTURE NO. 016-C013 STA. 5+566.000
SECTIONS 2001-167R AND (2425 & 2626) R-1
COOK COUNTY

CONSTRUCTION STAGING SEQUENCE & SECTIONS

DATE: 1/4/06 DRAWN BY: OD CHECKED BY: MJK

TENG
TENG & ASSOCIATES, INC.
ENGINEERS/ARCHITECTS/PLANNERS
CHICAGO, ILLINOIS

1 Added Sheet 01/04/2006

..\A899002A.DGN, ..\BC95\032A.DGN T:\DOCUMENT\93750\STRUCT\DGN\BC70012A.DGN
12-30-2005, 10:25:21
VARGINKZ

F.A.I. RTE.	SECTION	COUNTY	TOTAL SHEETS	SHEET NO.
	*	COOK	631	339E
STA.		TO STA.		
FED. ROAD DIST. NO.		ILLINOIS	FED. AID PROJECT	
* (2425 & 2626) R-2			CONTRACT NO. 62111	

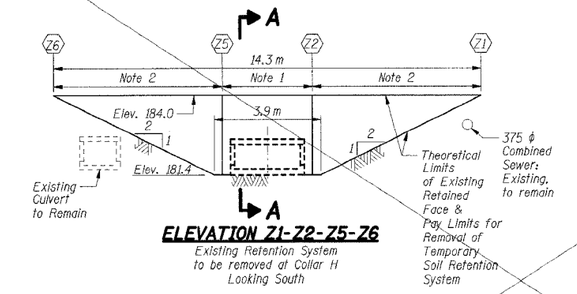

ELEVATION Z1-Z2-Z5-Z6

Existing Retention System to be removed at Collar H Looking South

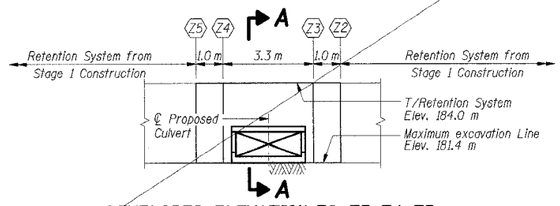

DEVELOPED ELEVATION Z2-Z3-Z4-Z5

Runaround at Collar H Looking South

Notes:

1. Removal limits for access to Staged Construction line, Stage 2.
2. Removal limits upon completion of Stage 2 backfilling.

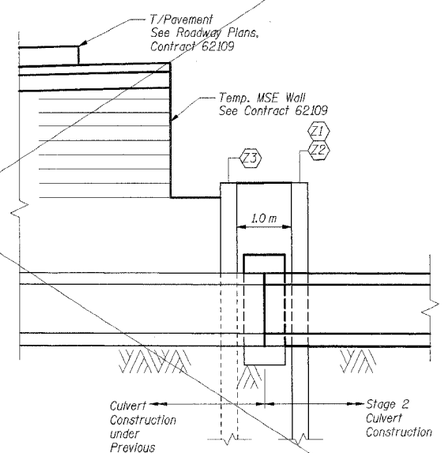

SECTION A-A

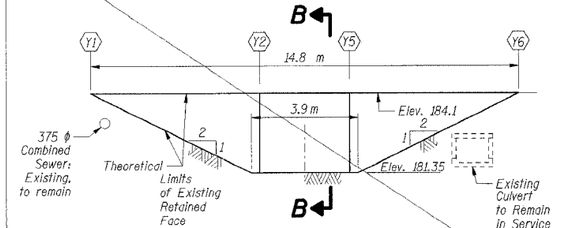

ELEVATION Y1-Y2-Y5-Y6

Retention for Collar G For Stage 2 Construction Looking North

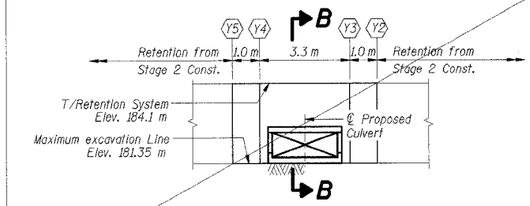

DEVELOPED ELEVATION Y2-Y3-Y4-Y5

Runaround at Collar G For Stage 3 Construction Looking South

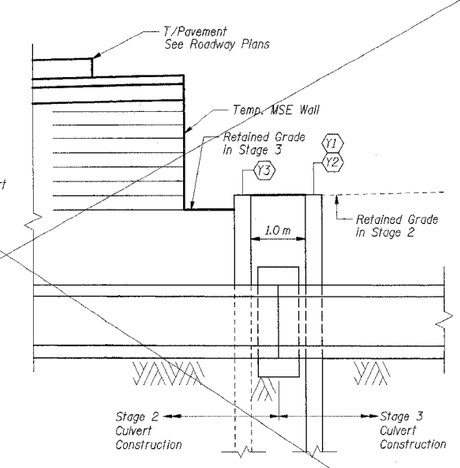

SECTION B-B

Notes:

3. Removal limits for access to Staged Construction line, Stage 4.
4. Removal limits upon completion of Stage 4 backfilling.

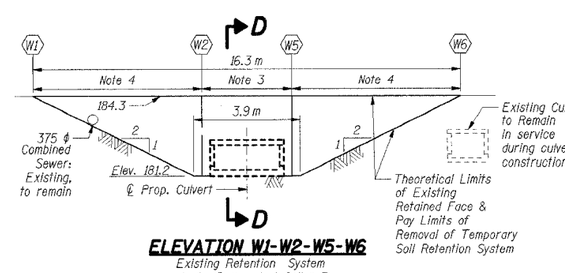

ELEVATION W1-W2-W5-W6

Existing Retention System to be Removed at Collar E Looking North

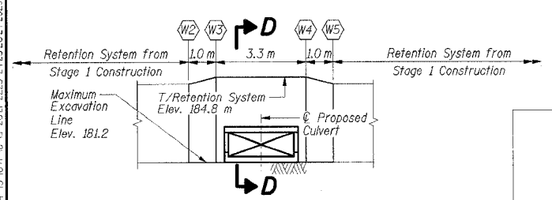

DEVELOPED ELEVATION W2-W3-W4-W5

Runaround at Collar E Looking North

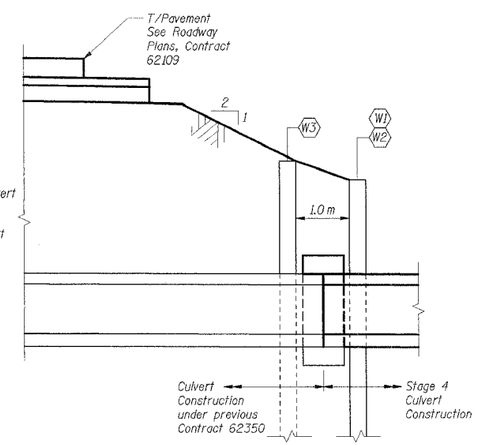

Notes:

1. Removal limits for access to Staged Construction line, Stage 4.
2. Removal limits upon completion of Stage 4 backfilling.

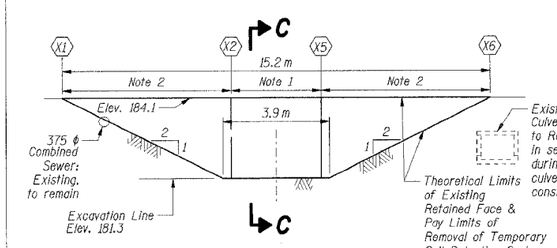

ELEVATION X1-X2-X5-X6

Existing Retention System to be Removed at Collar F Looking North

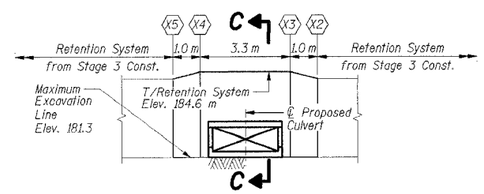

DEVELOPED ELEVATION X2-X3-X4-X5

Runaround at Collar F for Stage 4 Construction Looking South

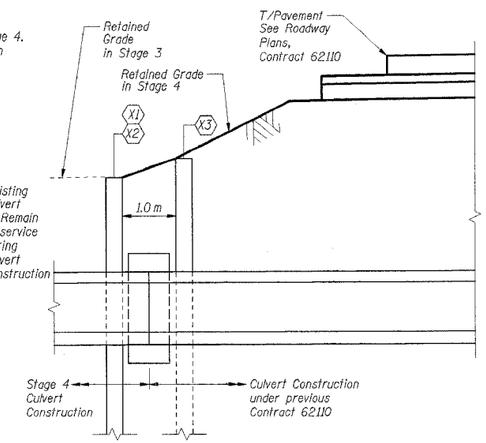

SECTION C-C

BILL OF MATERIAL

Item	Unit	Total
Temporary Soil Retention System	Sq m	37
Removal of Temporary Soil Retention System	Sq m	58

SHT. BC-05 OF 11

REVISIONS	
NAME	DATE

ILLINOIS DEPARTMENT OF TRANSPORTATION
F.A.I. ROUTE 80/94 (KINGERY EXPRESSWAY)
EB & WB INSIDE LANES (MAINLINE) CONSTRUCTION
BOX CULVERT
STRUCTURE NO. 016-C013 STA. 5+566.000
SECTIONS 2001-167R AND (2425 & 2626) R-1
COOK COUNTY

TEMPORARY SOIL RETENTION SYSTEM

DATE: 1/4/06

DRAWN BY: OD
CHECKED BY: MJK

TENG

TENG & ASSOCIATES, INC.
ENGINEERS/ARCHITECTS/PLANNERS
CHICAGO, ILLINOIS

1 Added Sheet 01/04/2006

..\A8990012A.DGN, ..\B1990032A.DGN
12-30-2005, 10:06:46
T:\DOCUMENT\93170\STRUCT\DGN\BCT10092A.DGN
VARSHNKZ
1 2 3 4 5 6 7 8 9 10 11 12 13 14 15 16 17 18 19 20 21 22 23 24 25 26 27 28 29 30 31 32 33 34 35 36 37 38 39 40 41 42 43 44 45 46 47 48 49 50 51 52 53 54 55 56 57 58 59 60 61 62 63

F.A.I. RTE.	SECTION	COUNTY	TOTAL SHEETS	SHEET NO.
	*	COOK	631	339F
STA.		TO STA.		
FED. ROAD DIST. NO.		ILLINOIS	FED. AID PROJECT	

* (2425 & 2626) R-2 CONTRACT NO. 62111

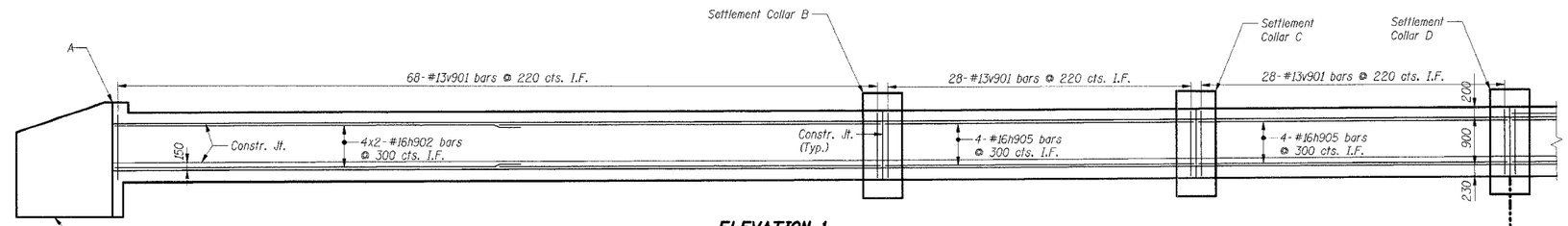

ELEVATION-1
(Looking East along ℄ Culvert)

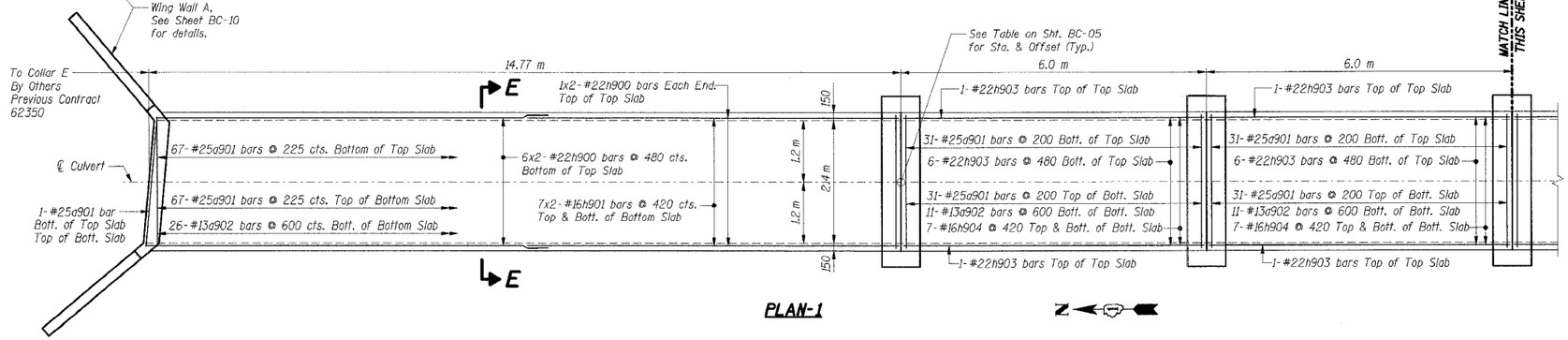

PLAN-1

BILL OF MATERIAL

Bar	No.	Size	Length (m)	Shape
a901	514	#25	3.16	
a902	92	#13	2.48	
h900	16	#22	7.84	
h901	28	#16	7.66	
h902	16	#16	7.66	
h903	24	#22	5.90	
h904	42	#16	5.90	
h905	24	#16	5.90	
h906	24	#22	6.97	
h907	42	#16	6.73	
h908	24	#16	6.73	
v901	480	#13	1.23	

Item	Unit	Total
Reinforcement Bars	kg	9,880
Concrete Box Culverts	Cu m	76.8

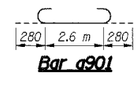

Bar a901

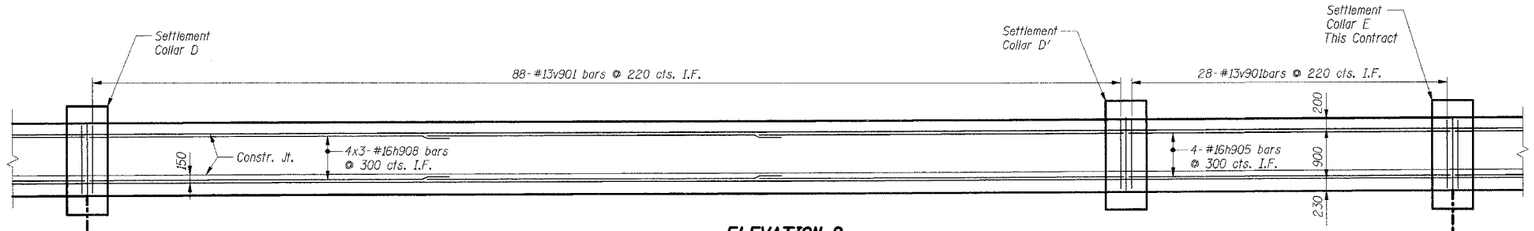

ELEVATION-2
(Looking East along ℄ Culvert)

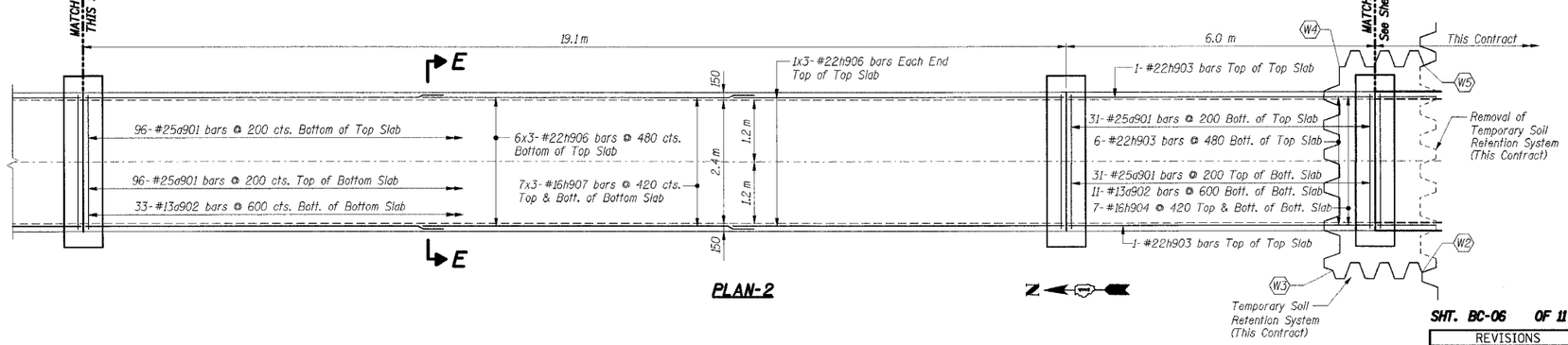

PLAN-2

Notes:

1. All dimensions are in millimeters (mm) except as noted.
2. Bars indicated thus 4 x 2-#15 etc. indicates 4 lines of bars with 2 lengths per line.
3. For Sections E-E, see Sht. BC-09.
4. For Settlement Collar Details see Sheet BC-09.
5. Work this sheet with Shts. BC-07 and BC-08.
6. I.F. denotes Inside Face. O.F. denotes Outside Face.

THIS SHEET FOR INFORMATION ONLY

SHT. BC-06 OF 11

REVISIONS	
NAME	DATE

ILLINOIS DEPARTMENT OF TRANSPORTATION
F.A.I. ROUTE 80/94 (KINGERY EXPRESSWAY)
EB & WB INSIDE LANES (MAINLINE) CONSTRUCTION
BOX CULVERT
STRUCTURE NO. 016-C013 STA. 5+566.000
SECTIONS 2001-167R AND (2425 & 2626) R-1
COOK COUNTY

TOP & BOTTOM SLAB PLANS & WALL ELEVATIONS I

DATE: 1/4/06 DRAWN BY: QD CHECKED BY: MJK

TENG & ASSOCIATES, INC.
ENGINEERS/ARCHITECTS/PLANNERS
CHICAGO, ILLINOIS

1 Added Sheet 01/04/2006

..\AB99B01A.DGN,..\BC99R01A.DGN,..\FR50R01A.DGN,..\BC99R02A.DGN,..\BC99R01A.DGN,..\BC99R02A.DGN
12-30-2005, 10:01:17 T:\DOCUMENT\193750\STRUCT\DGN\BC17032A.DGN VARSINKZ
1 2 3 4 5 6 7 8 9 10 11 12 13 14 15 16 17 18 19 20 21 22 23 24 25 26 27 28 29 30 31 32 33 34 35 36 37 38 39 40 41 42 43 44 45 46 47 48 49 50 51 52 53 54 55 56 57 58 59 60 61 62 63

F.A.I. RTE.	SECTION	COUNTY	TOTAL SHEETS	SHEET NO.
	*	COOK	631	339G
STA.		TO STA.		
FED. ROAD DIST. NO.		ILLINOIS	FED. AID PROJECT	

* (2425 & 2626) R-2 CONTRACT NO. 62111

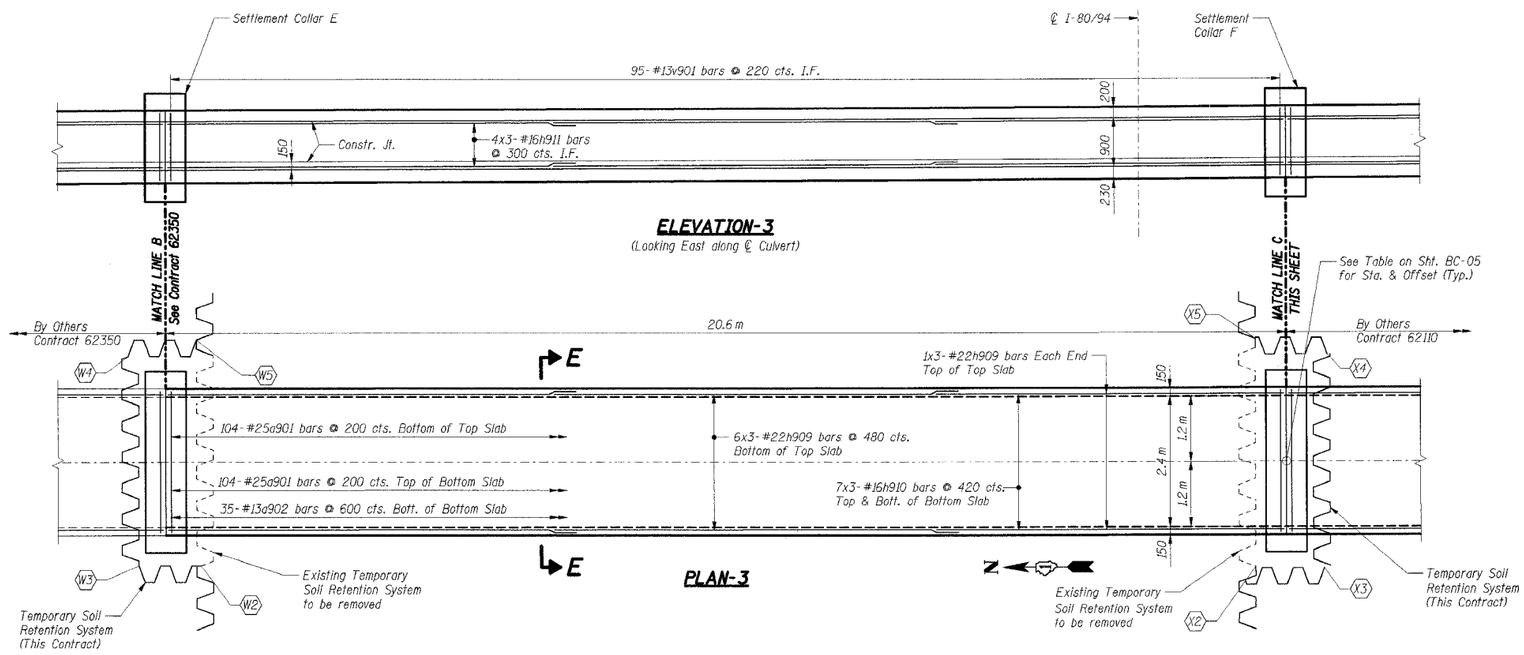

BILL OF MATERIAL

Bar	No.	Size	Length (m)	Shape
a901	208	#25	3.16	
a902	35	#13	2.48	
h909	24	#22	7.62	
h910	42	#16	7.29	
h911	24	#16	7.29	
v901	190	#13	1.23	

Item	Unit	Total
Reinforcement Bars	kg	4,020
Concrete Box Culverts	Cu m	29.5

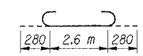

Bar a901

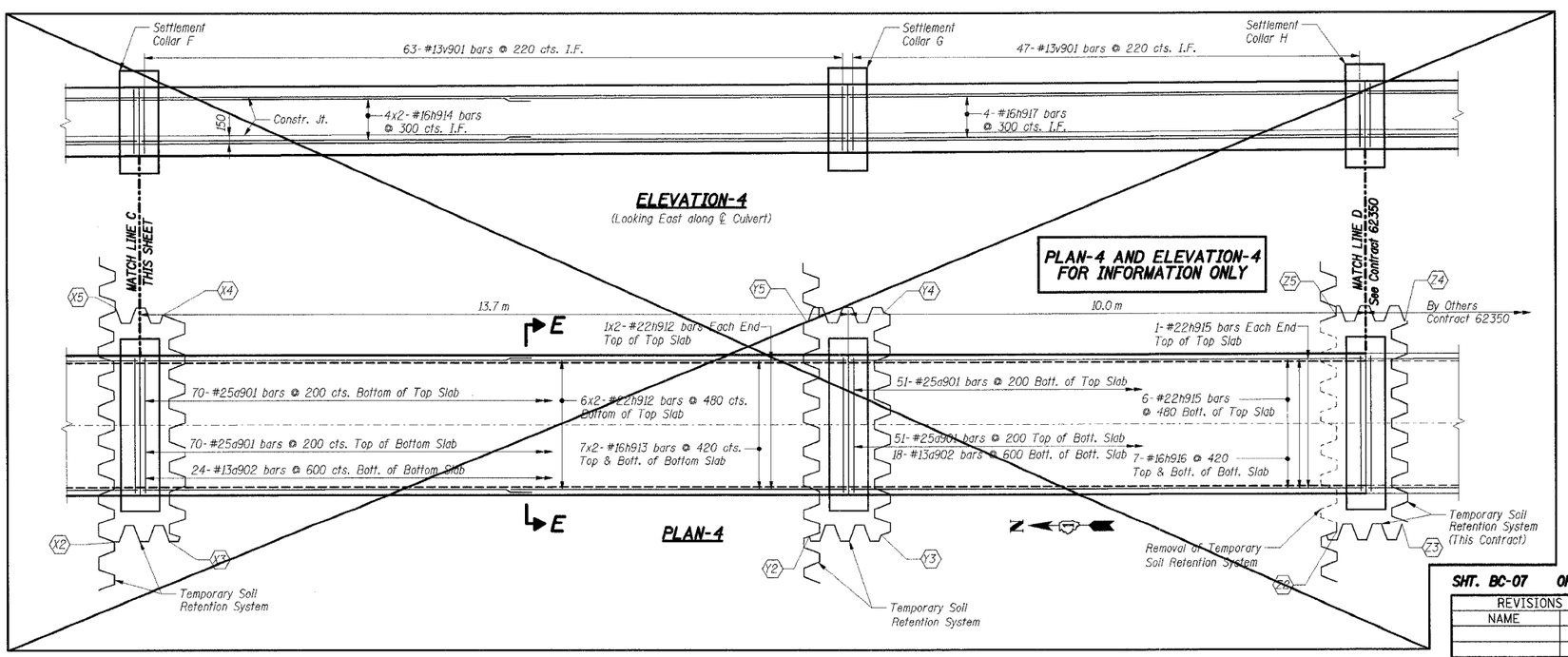

Notes:

1. All dimensions are in millimeters (mm) except as noted.
2. Bars indicated thus 4 x 2-#15 etc. indicates 4 lines of bars with 2 lengths per line.
3. For Sections E-E, see Sht. BC-09.
4. For Settlement Collar Details see Sheet BC-09
5. I.F. denotes Inside Face.
   O.F. denotes Outside Face.
6. For Temporary Soil Retention System workpoint locations see Sht. BC-02. For additional details, see Sht. BC-05.

SHT. BC-07 OF 11

REVISIONS	
NAME	DATE

ILLINOIS DEPARTMENT OF TRANSPORTATION
F.A.I. ROUTE 80/94 (KINGERY EXPRESSWAY)
EB & WB INSIDE LANES (MAINLINE) CONSTRUCTION
BOX CULVERT
STRUCTURE NO. 016-C013 STA. 5+566.000
SECTIONS 2001-167R AND (2425 & 2626) R-1
COOK COUNTY

TOP & BOTTOM SLAB PLANS & WALL ELEVATIONS II

DATE: 1/4/06 DRAWN BY: OD CHECKED BY: MJK

TENG & ASSOCIATES, INC.
ENGINEERS/ARCHITECTS/PLANNERS
CHICAGO, ILLINOIS

1 Added Sheet 01/04/2006

..\BC99R002A.DGN, ..\BC06052A.DGN, ..\BC99R022A.DGN, ..\BC99R002A.DGN, ..\BC99R022A.DGN VARSHNEZ
12-30-2005, 10:10:18 T:\DOCUMENT\193750\STRUCT\DGN\BC07052A.DGN 162643

F.A.I. RTE.	SECTION	COUNTY	TOTAL SHEETS	SHEET NO.
	*	COOK	631	339H
STA.		TO STA.		
FED. ROAD DIST. NO.		ILLINOIS	FED. AID PROJECT	

* (2425 & 2626) R-2 CONTRACT NO. 62111

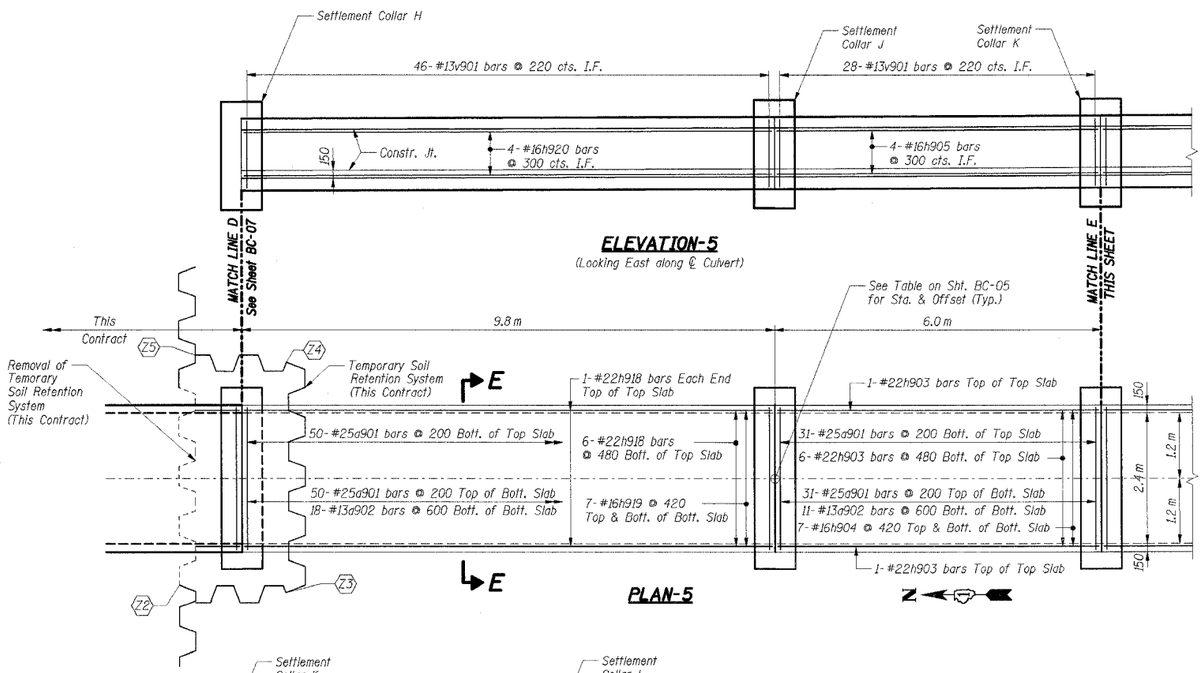

ELEVATION-5
(Looking East along ℄ Culvert)

PLAN-5

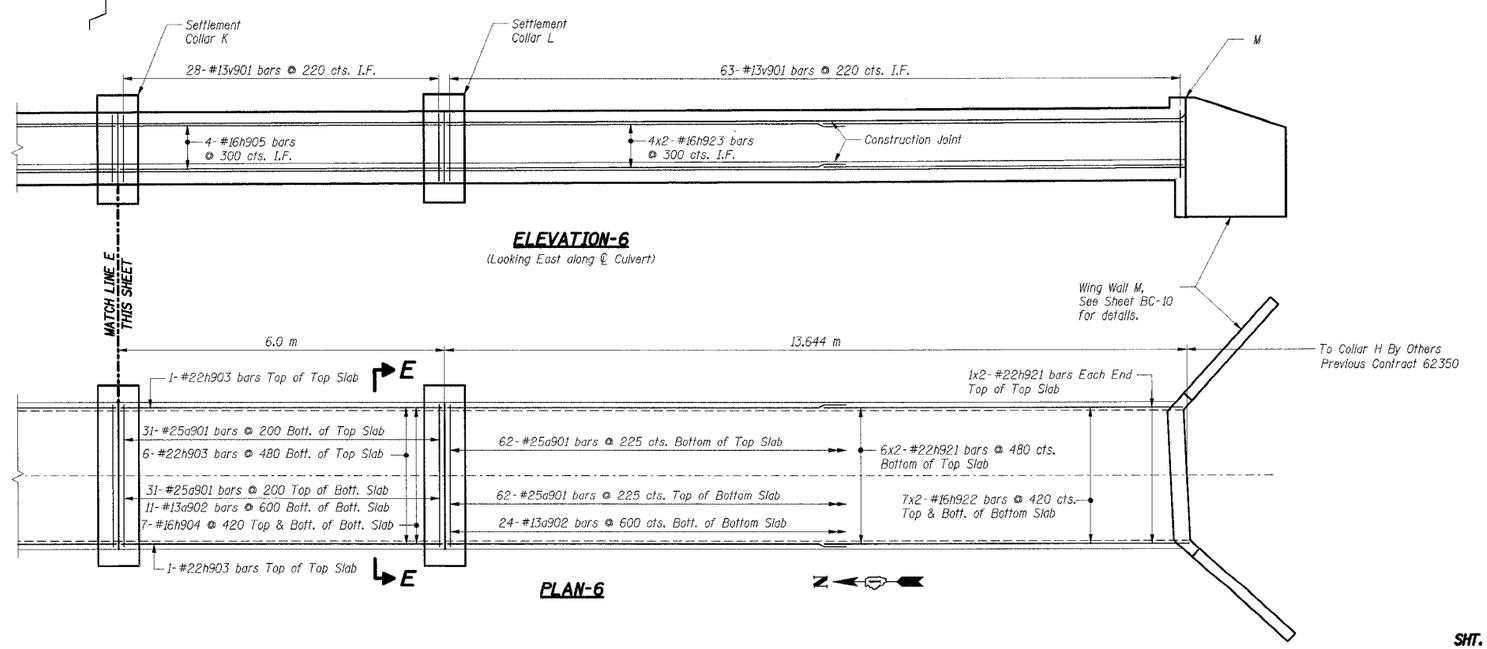

ELEVATION-6
(Looking East along ℄ Culvert)

PLAN-6

BILL OF MATERIAL

Bar	No.	Size	Length (m)	Shape
a901 *	348	#25	3.16	
a902	64	#13	2.48	
h903	16	#22	5.90	
h904	28	#16	5.90	
h905	16	#16	5.90	
h918	8	#22	9.70	
h919	14	#16	9.70	
h920	8	#16	9.70	
h921	16	#22	7.23	
h922	28	#16	7.05	
h923	16	#16	7.05	
v901	330	#13	1.23	

Item	Unit	Total
Reinforcement Bars	kg	8,670
Concrete Box Culverts	Cu m	53.4

* See Sht. BC-06 for Bar a901 bending diagram.

Notes:
1. All dimensions are in millimeters (mm) except as noted.
2. Bars indicated thus 4 x 2-#15 etc. indicates 4 lines of bars with 2 lengths per line.
3. For Sections E-E, see Sht. BC-09.
4. For Settlement Collar details, see Sheet BC-09.
5. Work this sheet with Shts. BC-06 and BC-07.
6. I.F. denotes Inside Face.
   O.F. denotes Outside Face.

THIS SHEET FOR INFORMATION ONLY

SHT. BC-08 OF 11

REVISIONS	
NAME	DATE

ILLINOIS DEPARTMENT OF TRANSPORTATION
F.A.I. ROUTE 80/94 (KINGERY EXPRESSWAY)
EB & WB INSIDE LANES (MAINLINE) CONSTRUCTION
BOX CULVERT
STRUCTURE NO. 016-C013 STA. 5+566.000
SECTIONS 2001-167R AND (2425 & 2626) R-1
COOK COUNTY

TOP & BOTTOM SLAB PLANS & WALL ELEVATIONS III

DATE: 1/4/06 DRAWN BY: OD CHECKED BY: MJK

TENG & ASSOCIATES, INC.
ENGINEERS/ARCHITECTS/PLANNERS
CHICAGO, ILLINOIS

1 Added Sheet 01/04/2006

..\BC99R002A.DGN..\BC06012A.DGN..\AB99002A.DGN..\BC99R012A.DGN..\PR06002A.DGN..\BC99R022A.DGN..\BC99R012A.DGN..\BC99R022A.DGN VARSPACE
12-30-2005,10:08 T:\DOCUMENT\93750\STRUCT\DGN\BC07072A.DGN
1 2 3 4 5 6 7 8 9 10 11 12 13 14 15 16 17 18 19 20 21 22 23 24 25 26 27 28 29 30 31 32 33 34 35 36 37 38 39 40 41 42 43 44 45 46 47 48 49 50 51 52 53 54 55 56 57 58 59 60 61 62 63

F.A.I. RTE.	SECTION	COUNTY	TOTAL SHEETS	SHEET NO.
	*	COOK	631	3391
STA.		TO STA.		
FED. ROAD DIST. NO.		ILLINOIS	FED. AID PROJECT	

* (2425 & 2626) R-2 CONTRACT NO. 62111

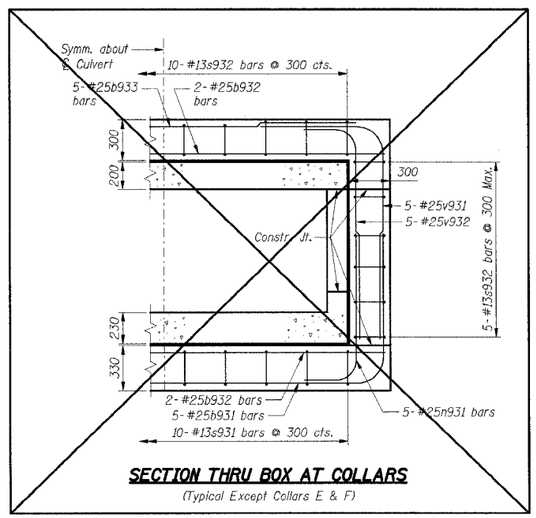

SECTION THRU BOX AT COLLARS

(Typical Except Collars E & F)

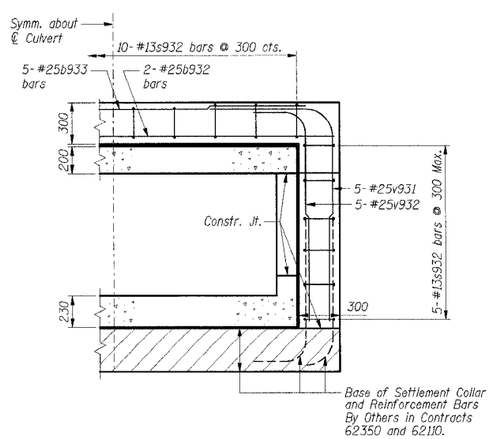

SECTION THRU BOX AT COLLARS E AND F

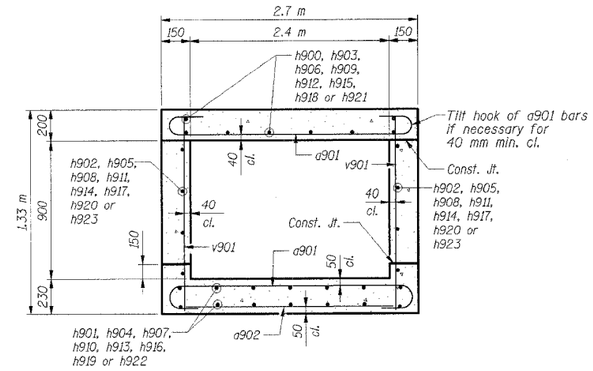

SECTION E-E

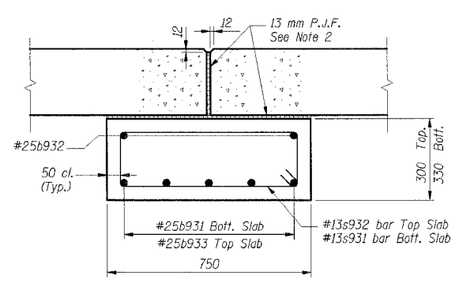

SECTION THRU TOP AND BOTTOM SLAB

(Bottom Slab Shown. Top Slab Inverted)

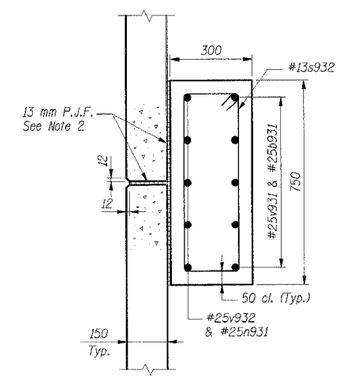

SECTION THRU SIDEWALL

SETTLEMENT COLLAR DETAILS

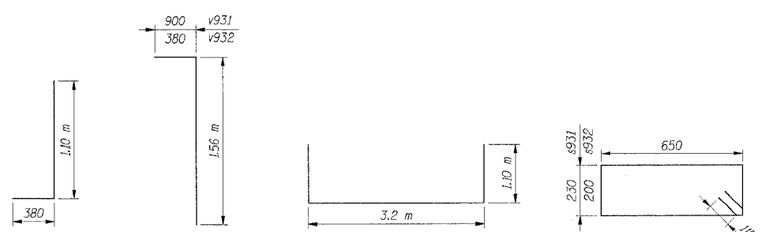

Bar n931 **Bars v931 & v932** **Bar b931** **Bars s931 & s932**

BAR LIST AND QUANTITIES
Typical Collar

Bar	No.	Size	Length (m)	Shape
b931	5	#25	5.4	
b932	4	#25	3.2	
b933	5	#25	2.83	
n931	10	#25	1.48	
s931	10	#13	1.99	
s932	20	#13	1.93	
v931	10	#25	2.46	
v932	10	#25	1.94	

Item	Unit	Total
Concrete Box Culverts	Cu m	2.2
Reinforcement Bars	kg	490

BAR LIST AND QUANTITIES
Completion of Collars E & F

Bar	No.	Size	Length (m)	Shape
b932	2	#25	3.20	
b933	5	#25	2.83	
s932	20	#13	1.93	
v931	10	#25	2.46	
v932	10	#25	1.94	

Item	Unit	Total
Concrete Box Culverts	Cu m	1.4
Reinforcement Bars	kg	280

BILL OF MATERIAL
Includes completion of Collars E & F

Item	Unit	Total
Concrete Box Culverts	Cu m	2.7
Reinforcement Bars	kg	560

Notes:
1. All dimensions are in millimeters (mm) except as noted.
2. The cost of Preformed Joint Filler (P.J.F.) is included with Concrete Box Culverts

SHT. BC-09 OF 11

REVISIONS	
NAME	DATE

ILLINOIS DEPARTMENT OF TRANSPORTATION
F.A.I. ROUTE 80/94 (KINGERY EXPRESSWAY)
EB & WB INSIDE LANES (MAINLINE) CONSTRUCTION
BOX CULVERT
STRUCTURE NO. 016-C013 STA. 5+566.000
SECTIONS 2001-167R AND (2425 & 2626) R-1
COOK COUNTY

SECTION THROUGH BARREL & SETTLEMENT COLLAR DETAILS

DATE: 1/4/06 DRAWN BY: OD CHECKED BY: MJK

TENG & ASSOCIATES, INC.
ENGINEERS/ARCHITECTS/PLANNERS
CHICAGO, ILLINOIS

1 Added Sheet 01/04/2006

..\AB9900C2A.DGN, ..\BC1301E2A.DGN, ..\BC1301F2A.DGN, ..\BC0602S2A.DGN
12-30-2005, 10:06:19 T:\DOCUMENT\93750\STRUCT\DGN\3C0702A.DGN
VARSHNKZ
VARSHNKZ 12:63

F.A.I. RTE.	SECTION	COUNTY	TOTAL SHEETS	SHEET NO.
	*	COOK	631	339J
STA.		TO STA.		
FED. ROAD DIST. NO.		ILLINOIS	FED. AID PROJECT	

* (2425 & 2626) R-2 CONTRACT NO. 62111

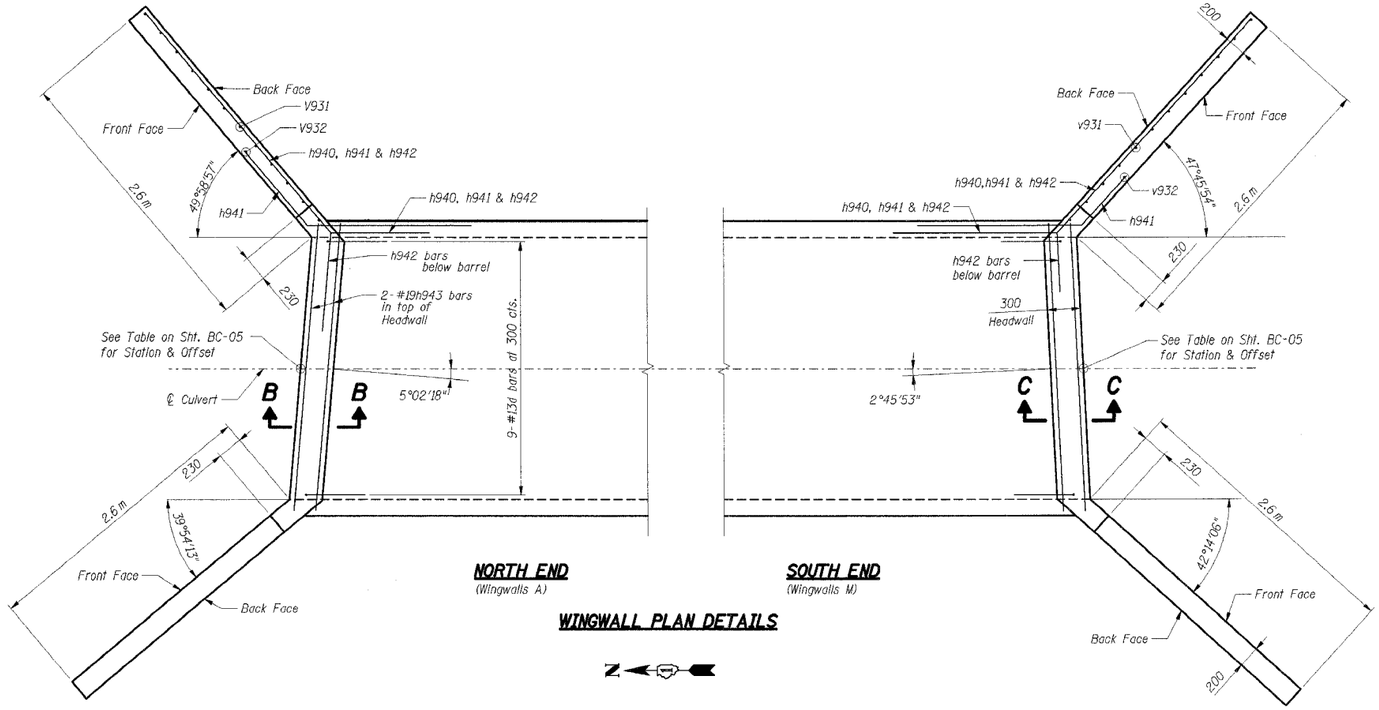

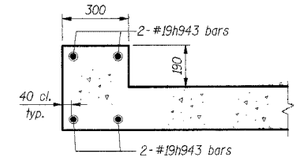

SECTION B-B
(Down Stream End)

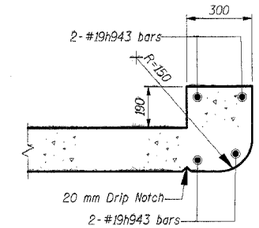

SECTION C-C
(Up Stream End)

SECTION THRU HEADWALL

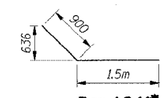

Bar h941*

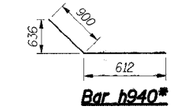

Bar h940*

Bar d

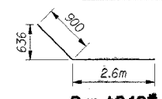

Bar h942*

* Bend in the field as required to fit

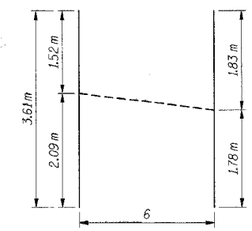

v931 bar cutting diagram

BAR LIST

Bar	No.	Size	Length (m)	Shape
d	18	#13	1.36	
h940	4	#15	1.51	
h941	20	#15	2.40	
h942	36	#15	3.50	
h943	8	#19	2.62	
v931	24	#15	3.61	
v932	4	#15	1.90	

Item	Unit	Total
Reinforcement Bars	kg	4[illegible]
Concrete Box Culverts	cu m	**

**Quantities for Concrete Box Culverts at wingwalls & headwalls on sheets BC-02 & BC-09

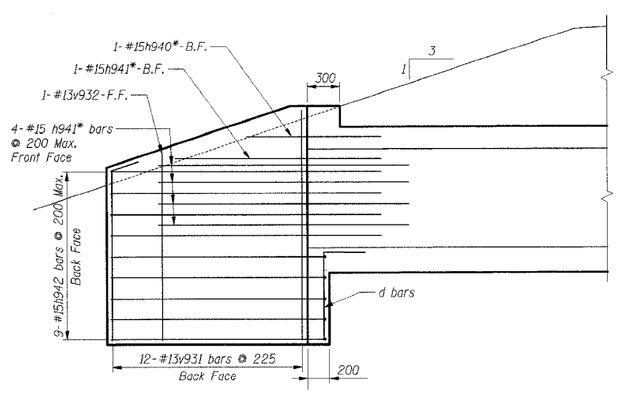

*Bend bars in Field as required to fit

WINGWALL ELEVATION DETAIL

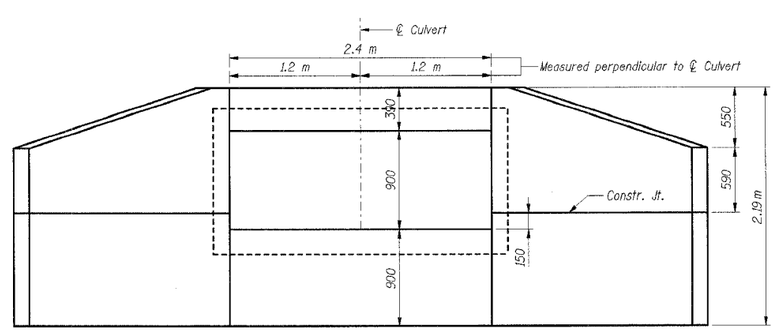

HEADWALL ELEVATION

Notes:
All dimensions are in millimeters (mm) except as noted.

THIS SHEET FOR INFORMATION ONLY

SHT. BC-10 OF 11

REVISIONS	
NAME	DATE

ILLINOIS DEPARTMENT OF TRANSPORTATION
F.A.I. ROUTE 80/94 (KINGERY EXPRESSWAY)
EB & WB INSIDE LANES (MAINLINE) CONSTRUCTION
BOX CULVERT
STRUCTURE NO. 016-C013 STA. 5+566.000
SECTIONS 2001-167R AND (2425 & 2626) R-1
COOK COUNTY

HEADWALL DETAILS

DATE: 1/4/06 DRAWN BY: OD CHECKED BY: MJK

TENG & ASSOCIATES, INC.
ENGINEERS/ARCHITECTS/PLANNERS
CHICAGO, ILLINOIS

1 Added Sheet 01/04/2006

..\AB99002A.DGN,..\BC99R022A.DGN,..\BC99R022A.DGN VARSHNKZ
12:30:2005, 0:0:0:20 T:\DOCUMENT\193750\STRUCT\DGN\B0T0252A.DGN
1 2 3 4 5 6 7 8 9 10 11 12 13 14 15 16 17 18 19 20 21 22 23 24 25 26 27 28 29 30 31 32 33 34 35 36 37 38 39 40 41 42 43 44 45 46 47 48 49 50 51 52 53 54 55 56 57 58 59 60 61 62 63

F.A.I. RTE.	SECTION	COUNTY	TOTAL SHEETS	SHEET NO.
	*	COOK	631	339K
STA.		TO STA.		
FED. ROAD DIST. NO.		ILLINOIS	FED. AID PROJECT	

* (2425 & 2626) R-2 CONTRACT NO. 62111

Boring No. CU-1, Page 1 of 1

Everest Engineering Company
STRUCTURE BORING LOG

Page 1 of 1
Date 7/17/02

ROUTE FAI 80/94 DESCRIPTION KINGERY EXPRESSWAY
SECT. WEST OF IL 83 TO EASTOF BURNHAM AVE. STRUCT. NO. 016-C013 DRILLED BY PATRICK DRILLING INC.
COUNTY COOK LOCATION BOX CULVERT AT I-80/94, STA. 5+566 S. ___, TWP. 36 N, RNG. 14E/15 E

Boring No. CU-1
Station 5+566
Offset 38.5m RT.
Surface Elev. 183.50 m

Surface Water Elev. ___
Groundwater Elev.: ___
when drilling ___
at Completion ___
after ___ Hrs. ___

Description	Elev.	DEPTH	BLOWS	Qu kPa	W %
ASPHALT PAVEMENT					
Medium Dense, Brown SAND trace - gravel	183.15				
	183.05	0.5	5 5 5	354 B	10
FILL					
Very Stiff, Black SILTY CLAY trace - gravel and brick	182.50				
FILL		1.0	4 3 5	201 B	13
Stiff to Very Stiff, Brown and Gray SILTY CLAY trace - gravel		2.0	3 2 3	115 B	20
Loose to Medium Dense, Brown and Gray SILTY LOAM	180.71	3.0	4 2 4		23
		6.0	6 7 3		20
		9.0	4 8 8		18
Medium Stiff, Brown and Gray SILTY CLAY trace - gravel	179.06	4.5			
Very Loose, Brown and Gray SILTY LOAM	178.70				
Soft, Gray SILTY CLAY trace - gravel	178.40		2 1 1	38 B	22
		6.0	1 1 2	38 B	21
Medium Stiff to Stiff, Gray SILTY CLAY LOAM trace - gravel	177.20		1 1 1	115 B	23
		7.5	1 2 2	72 B	21

Description	Elev.	DEPTH	BLOWS	Qu kPa	W %
END OF BORING	175.55				
			3 4 4	115 B	20

SPT. (N) = Sum of last two blow values in sample. (Qu) B=Bulge S=Shear P=Penetration Test
Stations, Depths, Offset, and Elevations are in Meters

Boring No. CU-1S, Page 1 of 1

Everest Engineering Company
STRUCTURE BORING LOG

Page 1 of 1
Date 7/17/02

ROUTE FAI 80/94 DESCRIPTION KINGERY EXPRESSWAY
SECT. WEST OF IL 83 TO EASTOF BURNHAM AVE. STRUCT. NO. 016-C013 DRILLED BY PATRICK DRILLING INC.
COUNTY COOK LOCATION BOX CULVERT AT I-80/94, STA. 5+566 S. ___, TWP. 36 N, RNG. 14/15 E

Boring No. CU-1S
Station 5+566
Offset 39.0m RT.
Surface Elev. 183.50 m

Surface Water Elev. ___
Groundwater Elev.: ___
when drilling ___
at Completion ___
after ___ Hrs. ___

Description	Elev.	DEPTH	BLOWS	Qu kPa	W %
FROM 0.0 FEET TO 5.0 FEET SEE STRUCTURE BORING LOG FOR BORING NO. CU-1					
Very Stiff, Brown and Gray SILTY CLAY trace - gravel	182.00	1.5		278	23
				307	21
				230	21
Loose to Medium Dense, Brown and Gray SILTY LOAM	180.71	3.0		192	22
					17
					21
					21
				67	21
Medium Stiff, Brown and Gray SILTY CLAY trace - gravel	179.00	4.5		230	19
Very Loose/Medium Stiff, Brown and Gray SILTY LOAM	178.73			48	21
Soft to Stiff, Gray SILTY CLAY trace - gravel	178.40			86	21
				57	21
				98	23
				38	21
		6.0		176	23
Medium Stiff to Stiff, Gray SILTY CLAY LOAM trace - gravel	177.20			115	24
				86	18
				96	21
END OF BORING	176.60			115	17
		7.5			

SPT. (N) = Sum of last two blow values in sample. (Qu) B=Bulge S=Shear P=Penetration Test
Stations, Depths, Offset, and Elevations are in Meters

Boring No. CU-2, Page 1 of 1

Everest Engineering Company
STRUCTURE BORING LOG

Page 1 of 1
Date 7/23/02

ROUTE FAI 80/94 DESCRIPTION LOMBERD EXPRESSWAY
SECT. WEST OF IL 83 TO EASTOF BURNHAM AVE. STRUCT. NO. 016-C013 DRILLED BY PATRICK DRILLING
COUNTY COOK LOCATION BOX CULVERT AT I-80/94, STA. 5+566 S. ___, TWP. 36 N, RNG. 14/15 E

Boring No. CU-2
Station 5+566
Offset 1.2m LT.
Surface Elev. 184.10 m

Surface Water Elev. ___
Groundwater Elev.: ___
when drilling ___
at Completion ___
after ___ Hrs. ___

Description	Elev.	DEPTH	BLOWS	Qu kPa	W %
ASPHALT PAVEMENT					
Stiff to Very Stiff Brown and Gray SILTY CLAY trace - gravel	183.80				
			4 5 5	201 B	16
			4 2 5	163 B	12
FILL		1.5			
Very Stiff, Brown and Gray SILTY CLAY trace - gravel	182.45				
			3 2 4	246 B	19
			3 3 3	246 B	20
Medium Dense, Brown and Gray SILTY LOAM	180.95	3.0			
			5 6 7		27
			7 8 8		27
Soft to Medium Stiff, Gray SILTY CLAY trace - gravel	179.45	4.5			
			4 2 1	29 B	22
			1 1 2	57 B	26
Medium Stiff to Stiff, Gray SILTY CLAY LOAM trace - gravel	177.95	6.0			
			0 1 2	57 B	27
			0 1 3	95 B	20

Description	Elev.	DEPTH	BLOWS	Qu kPa	W %
END OF BORING	176.15				
			4 5 6	77 B	21

SPT. (N) = Sum of last two blow values in sample. (Qu) B=Bulge S=Shear P=Penetration Test
Stations, Depths, Offset, and Elevations are in Meters

Boring No. CU-3, Page 1 of 1

Everest Engineering Company
STRUCTURE BORING LOG

Page 1 of 1
Date 7/18/02

ROUTE FAI 80/94 DESCRIPTION KINGERY EXPRESSWAY
SECT. WEST OF IL 83 TO EASTOF BURNHAM AVE. STRUCT. NO. 016-C013 DRILLED BY PATRICK DRILLING INC.
COUNTY COOK LOCATION BOX CULVERT AT I-80/94, STA. 5+566 S. ___, TWP. 36N, RNG. 14/15E

Boring No. CU-3
Station 5+566
Offset 31.3m LT.
Surface Elev. 183.20 m

Surface Water Elev. ___
Groundwater Elev.: ___
when drilling 181.4
at Completion 175.7
after ___ Hrs. ___

Description	Elev.	DEPTH	BLOWS	Qu kPa	W %
TOPSOIL	182.90				
Very Stiff Brown and Gray SILTY CLAY LOAM trace - gravel and roots			10 5 5	240 P	21
Loose, Brown SANDY LOAM trace - gravel	182.30	1.0			
			3 2 1		11
Stiff, Brown and Gray SILTY CLAY trace - gravel	181.56	1.7			
			1 2 4	144 P	23
Loose, Gray SILTY LOAM	180.95				
			1 2 3		23
Stiff, Brown and Gray SILTY CLAY trace - gravel	179.30	3.9			
			4 2 3	57 B	22
			7 10 4	120 P	20
Loose, Gray SILTY LOAM	178.40	4.8			
			1 2 2		23
Stiff, Brown and Gray SILTY CLAY trace - gravel	177.95				
			1 2 2	56 P	28
Medium Stiff to Very Stiff, Gray SILTY CLAY LOAM trace - gravel	177.20	6.0			
			1 4 5	201 B	19
			2 4 5	115 B	21

Description	Elev.	DEPTH	BLOWS	Qu kPa	W %
END OF BORING	175.25				
			5 7 8	99 B	21

SPT. (N) = Sum of last two blow values in sample. (Qu) B=Bulge S=Shear P=Penetration Test
Stations, Depths, Offset, and Elevations are in Meters

Boring No. CU-3S, Page 1 of 1

Everest Engineering Company
STRUCTURE BORING LOG

Page 1 of 1
Date 7/18/02

ROUTE FAI 80/94 DESCRIPTION KINGERY EXPRESSWAY
SECT. WEST OF IL 83 TO EASTOF BURNHAM AVE. STRUCT. NO. 016-C013 DRILLED BY PATRICK DRILLING INC.
COUNTY COOK LOCATION BOX CULVERT AT I-80/94, STA. 5+566 S. ___, TWP. 36N, RNG. 14/15E

Boring No. CU-3S
Station 5+566
Offset 31.0m LT.
Surface Elev. 183.20 m

Surface Water Elev. ___
Groundwater Elev.: ___
when drilling ___
at Completion ___
after ___ Hrs. ___

Description	Elev.	DEPTH	BLOWS	Qu kPa	W %
FROM 0.0 FEET TO 5.0 FEET SEE STRUCTURE BORING LOG FOR BORING NO. CU-3					
Stiff to Very Stiff, Brown and Gray SILTY CLAY trace - gravel	181.70	1.5		230	23
				182	24
Loose/Medium Stiff to Very Stiff, Brown and Gray SILTY LOAM	181.01				21
				163	22
				230	21
				67	20
Medium Stiff to Stiff, Brown and Gray SILTY CLAY trace - gravel	179.30	3.9		115	18
				77	21
				105	25
				125	23
				57	21
				125	23
Loose, Gray SILTY LOAM	178.25			134	22
Medium Stiff to Stiff, Gray SILTY CLAY trace - gravel	178.10			67	23
				105	27
				125	29
Medium Stiff to Stiff, Gray SILTY CLAY LOAM trace - gravel	177.50	6.0		115	23
				144	22
				85	21
END OF BORING	176.50	7.5		153	22

SPT. (N) = Sum of last two blow values in sample. (Qu) B=Bulge S=Shear P=Penetration Test
Stations, Depths, Offset, and Elevations are in Meters

Boring No. CU-4, Page 1 of 1

Everest Engineering Company
STRUCTURE BORING LOG

Page 1 of 1
Date 7/18/02

ROUTE FAI 80/94 DESCRIPTION KINGERY EXPRESSWAY
SECT. WEST OF IL 83 TO EASTOF BURNHAM AVE. STRUCT. NO. 016-C013 DRILLED BY PATRICK DRILLING INC.
COUNTY COOK LOCATION BOX CULVERT AT I-80/94, STA. 5+566 S. ___, TWP. 36N, RNG. 14/15E

Boring No. CU-4
Station 5+566
Offset 54.0m LT.
Surface Elev. 182.90 m

Surface Water Elev. ___
Groundwater Elev.: ___
when drilling ___
at Completion ___
after ___ Hrs. ___

Description	Elev.	DEPTH	BLOWS	Qu kPa	W %
TOPSOIL	182.67				
Stiff to Hard, Brown and Gray SILTY CLAY trace - gravel and roots			7 7 9	431 P	7
			6 7 8	517 S	10
			4 2 4	115 B	21
Medium Dense, Brown SILTY LOAM	180.50	3.0			
			9 11 14		23
Medium Stiff to Very Stiff, Gray SILTY CLAY LOAM trace - gravel	179.75	3.9			
			2 2 4	77 B	20
			2 3 8	57 B	19
			2 2 3	102 B	17
			4 5 8	201 B	16
			2 3 4	172 B	20
			3 4 5	163 B	19

Description	Elev.	DEPTH	BLOWS	Qu kPa	W %
END OF BORING	174.95				
			8 8 11	115 B	19

SPT. (N) = Sum of last two blow values in sample. (Qu) B=Bulge S=Shear P=Penetration Test
Stations, Depths, Offset, and Elevations are in Meters

SHT. BC-11 OF 11

REVISIONS	
NAME	DATE

ILLINOIS DEPARTMENT OF TRANSPORTATION
F.A.I. ROUTE 80/94 (KINGERY EXPRESSWAY)
EB & WB INSIDE LANES (MAINLINE) CONSTRUCTION
BOX CULVERT
STRUCTURE NO. 016-C013 STA. 5+566.000
SECTIONS 2001-167R AND (2425 & 2626) R-1
COOK COUNTY

BORING LOGS

DATE: 1/4/06
DRAWN BY: OD
CHECKED BY: MJK

TENG
TENG & ASSOCIATES, INC.
ENGINEERS/ARCHITECTS/PLANNERS
CHICAGO, ILLINOIS

1 Added Sheet 01/04/2006

..\B099R62A.DGN ..\B99000EA.DGN T:\DOCUMENT\83750\STRUCT\DGN\B0170292A.DGN VARSHNKZ
12-30-2005, 6:06:22 2 3 4 5 6 7 8 9 10 11 12 13 14 15 16 17 18 19 20 21 22 23 24 25 26 27 28 29 30 31 32 33 34 35 36 37 38 39 40 41 42 43 44 45 46 47 48 49 50 51 52 53 54 55 56 57 58 59 60 61 62 63

F.A.I. RTE.	SECTION	COUNTY	TOTAL SHEETS	SHEET NO.
83	*	COOK	631	525
STA.		TO STA.		
FED. ROAD DIST. NO.		ILLINOIS	FED. AID PROJECT	
* (2425 & 2626) R-2			CONTRACT NO. 62111	

LEGEND

- EXISTING PAVEMENT
- TEMPORARY PAVEMENT
- POROUS GRANULAR EMBANKMENT

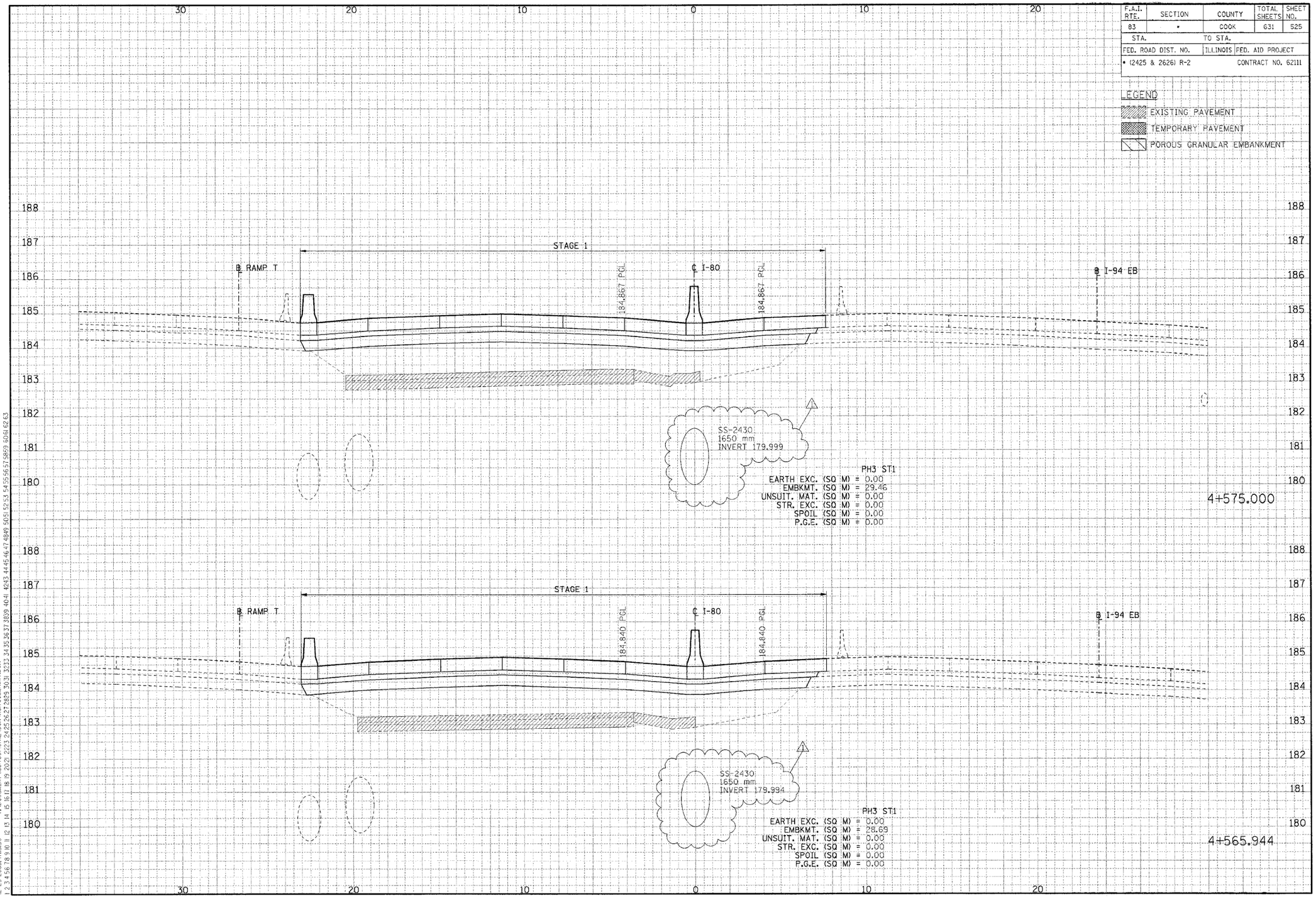

CROSS-SECTIONS FOR I-80/94

△1 REVISED 01/04/2006, KV

FINAL SURVEY		BY	DATE
NOTE BOOK	SURVEYED		
	PLOTTED		
	TEMPLATE		
	AREAS		
NO.	AREAS CHECKED		

ORIGINAL SURVEY		BY	DATE
NOTE BOOK	SURVEYED		
	PLOTTED		
	TEMPLATE		
	AREAS		
NO.	AREAS CHECKED		

..\XR99002A.DGN, ..\XP17002A.DGN, ..\XP17002A.DGN, ..\XW30032A.DGN, ..\XW17032A.DGN, ..\XL99R012A.DGN, ..\XL99R012A.DGN, ..\XR99002A.DGN, ..\XR99002A.DGN, ..\XR30022A.DGN, ..\XR17022A.DGN, ..\
12-29-2005, fd3550 1:\DOCUMENT\93150\CIVIL\DGN\XS70032A.KV.DGN VARSHNEY
1 2 3 4 5 6 7 8 9 10 11 12 13 14 15 16 17 18 19 20 21 22 23 24 25 26 27 28 29 30 31 32 33 34 35 36 37 38 39 40 41 42 43 44 45 46 47 48 49 50 51 52 53 54 55 56 57 58 59 60 61 62 63

F.A.I. RTE.	SECTION	COUNTY	TOTAL SHEETS	SHEET NO.
83	*	COOK	631	526
STA.		TO STA.		
FED. ROAD DIST. NO.		ILLINOIS	FED. AID PROJECT	
* (2425 & 2626) R-2			CONTRACT NO. 62111	

LEGEND

EXISTING PAVEMENT

TEMPORARY PAVEMENT

POROUS GRANULAR EMBANKMENT

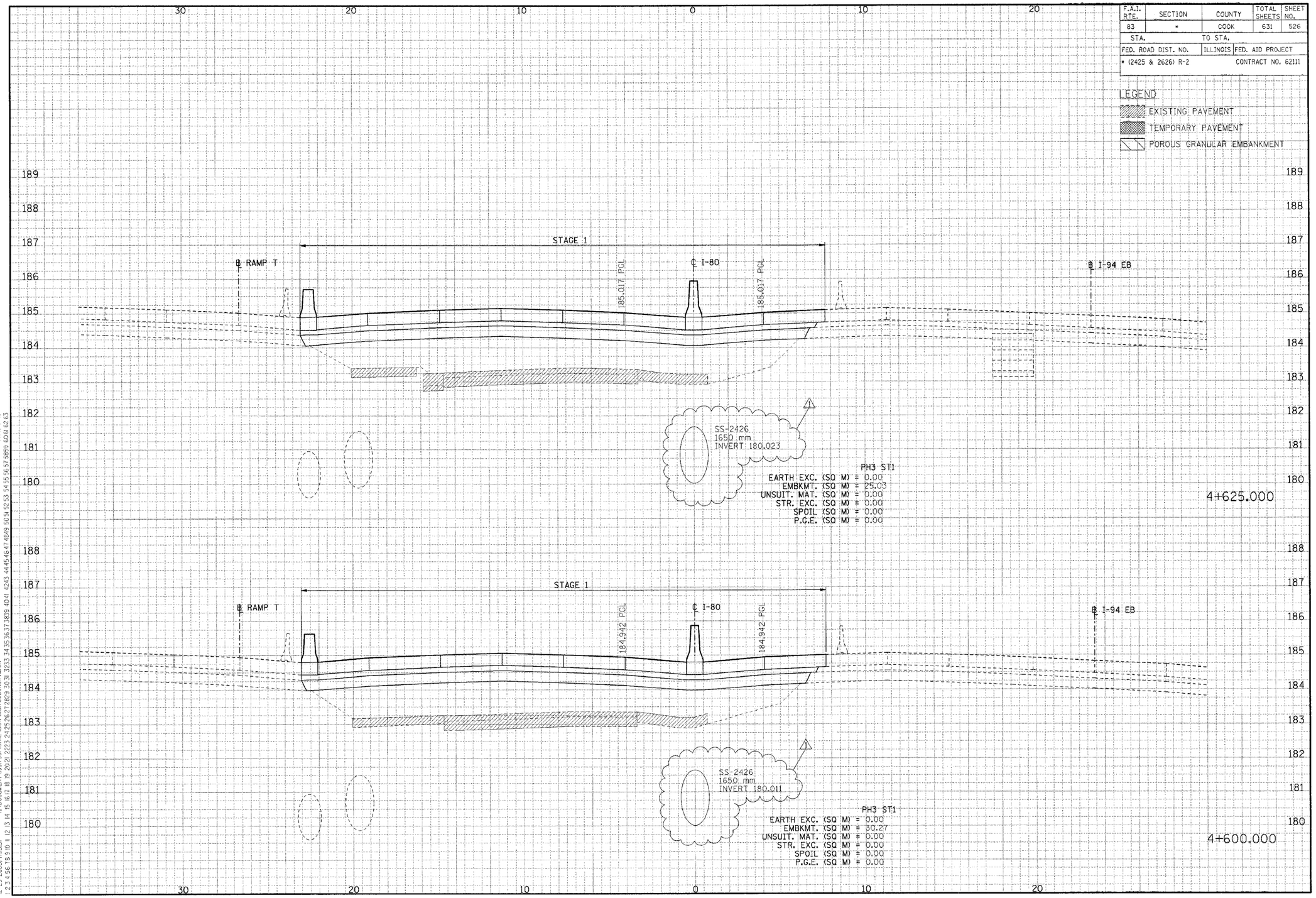

CROSS-SECTIONS FOR I-80/94

1 REVISED 01/04/2006, KV

FINAL SURVEY	SURVEYED	BY	DATE
NOTE BOOK	PLOTTED		
	TEMPLATE		
	AREAS		
NO.	AREAS CHECKED		

ORIGINAL SURVEY	SURVEYED	BY	DATE
NOTE BOOK	PLOTTED		
	TEMPLATE		
	AREAS		
NO.	AREAS CHECKED		

..\VR99G02A.DGN, ..\VP170G2A.DGN, ..\VP170G2A.DGN, ..\VR30032A.DGN, ..\XW170032A.DGN, ..\VR30032A.DGN, ..\VR99002A.DGN, ..\VR30022A.DGN, ..\HR170022A.DGN, ..\XW30002A.DGN, ..\VP170032A.DGN, ..\VS170032A.V.DGN
12-29-2005, (h35) T:\DOCUMENT\93750\CIVIL\DGN\VS170032A.V.DGN
YARSHWAZ

F.A.I. RTE.	SECTION	COUNTY	TOTAL SHEETS	SHEET NO.
83	*	COOK	631	527
STA.		TO STA.		
FED. ROAD DIST. NO.		ILLINOIS	FED. AID PROJECT	
* (2425 & 2626) R-2			CONTRACT NO. 62111	

LEGEND

- EXISTING PAVEMENT
- TEMPORARY PAVEMENT
- POROUS GRANULAR EMBANKMENT

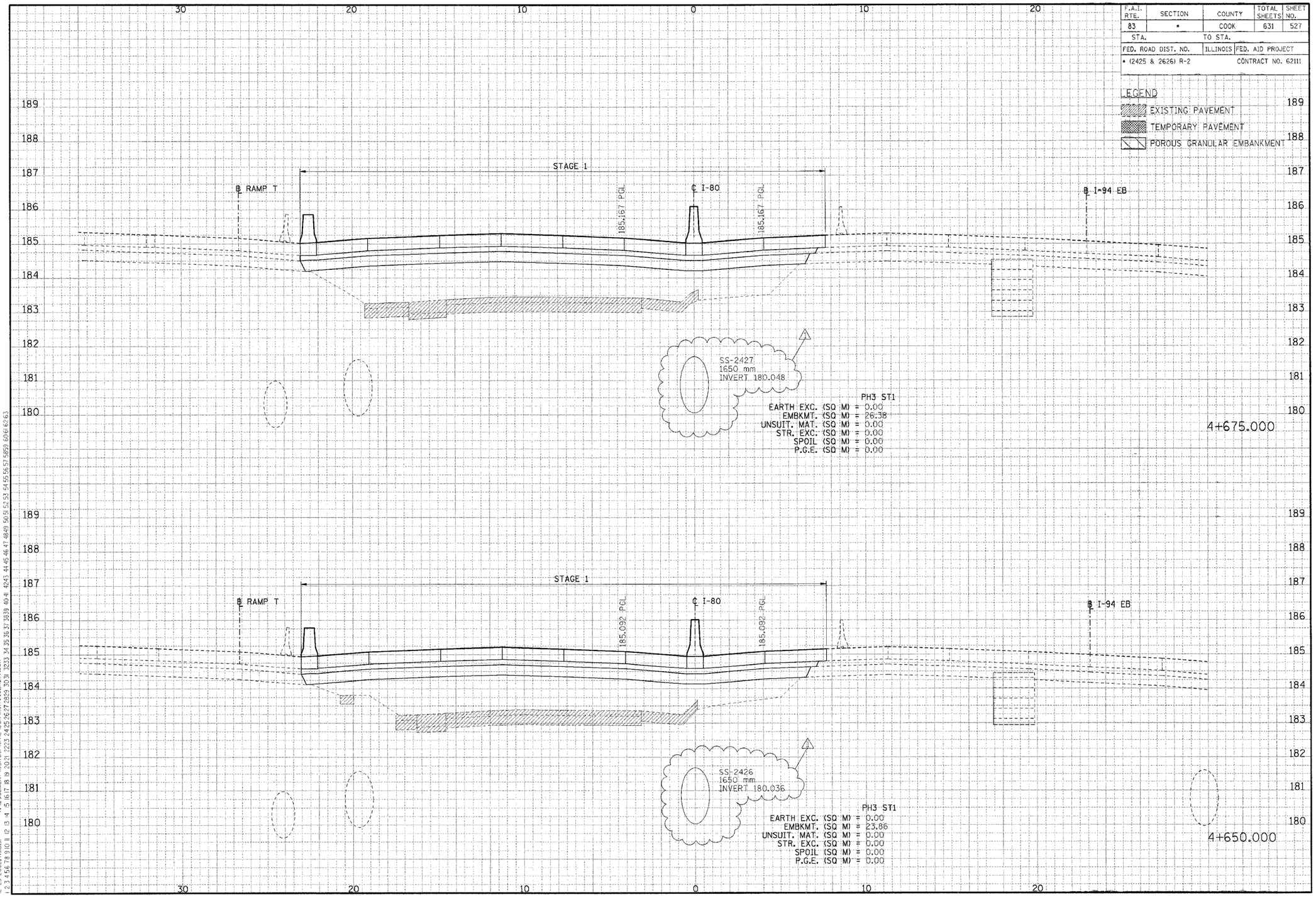

CROSS-SECTIONS FOR I-80/94

⚠ REVISED 01/04/2006, KV

FINAL SURVEY	SURVEYED	BY	DATE
NOTE BOOK	PLOTTED		
NO.	TEMPLATE		
	AREAS		
	AREAS CHECKED		

ORIGINAL SURVEY	SURVEYED	BY	DATE
NOTE BOOK	PLOTTED		
NO.	TEMPLATE		
	AREAS		
	AREAS CHECKED		

..\VR99002A.DGN, ..\VP17002A.DGN, ..\VP17002A.DGN, ..\VP17003 2A.DGN, ..\VW3002A.DGN, ..\VR17002 2A.DGN, ..\VR15002 2A.DGN, ..\VR99002 2A.DGN, ..\PR99002A.DGN, ..\PR15002A.DGN, ..\DR3G032A.DGN, ..\VW17003 2A.DGN, ..\VS199R02A.DGN, ..\VS199R02A.DGN, ..\TR77022A.DGN, ..\
12-29-2005, FH35F T:\DOCUMENT\93150\CIVIL\DGN\VS170032A_KV.DGN VARSHNKZ
1 2 3 4 5 6 7 8 9 10 11 12 13 14 15 16 17 18 19 20 21 22 23 24 25 26 27 28 29 30 31 32 33 34 35 36 37 38 39 40 41 42 43 44 45 46 47 48 49 50 51 52 53 54 55 56 57 58 59 60 61 62 63

F.A.I. RTE.	SECTION	COUNTY	TOTAL SHEETS	SHEET NO.
83	*	COOK	631	528
STA.		TO STA.		
FED. ROAD DIST. NO.		ILLINOIS	FED. AID PROJECT	
* (2425 & 2626) R-2			CONTRACT NO. 62111	

LEGEND

- EXISTING PAVEMENT
- TEMPORARY PAVEMENT
- POROUS GRANULAR EMBANKMENT

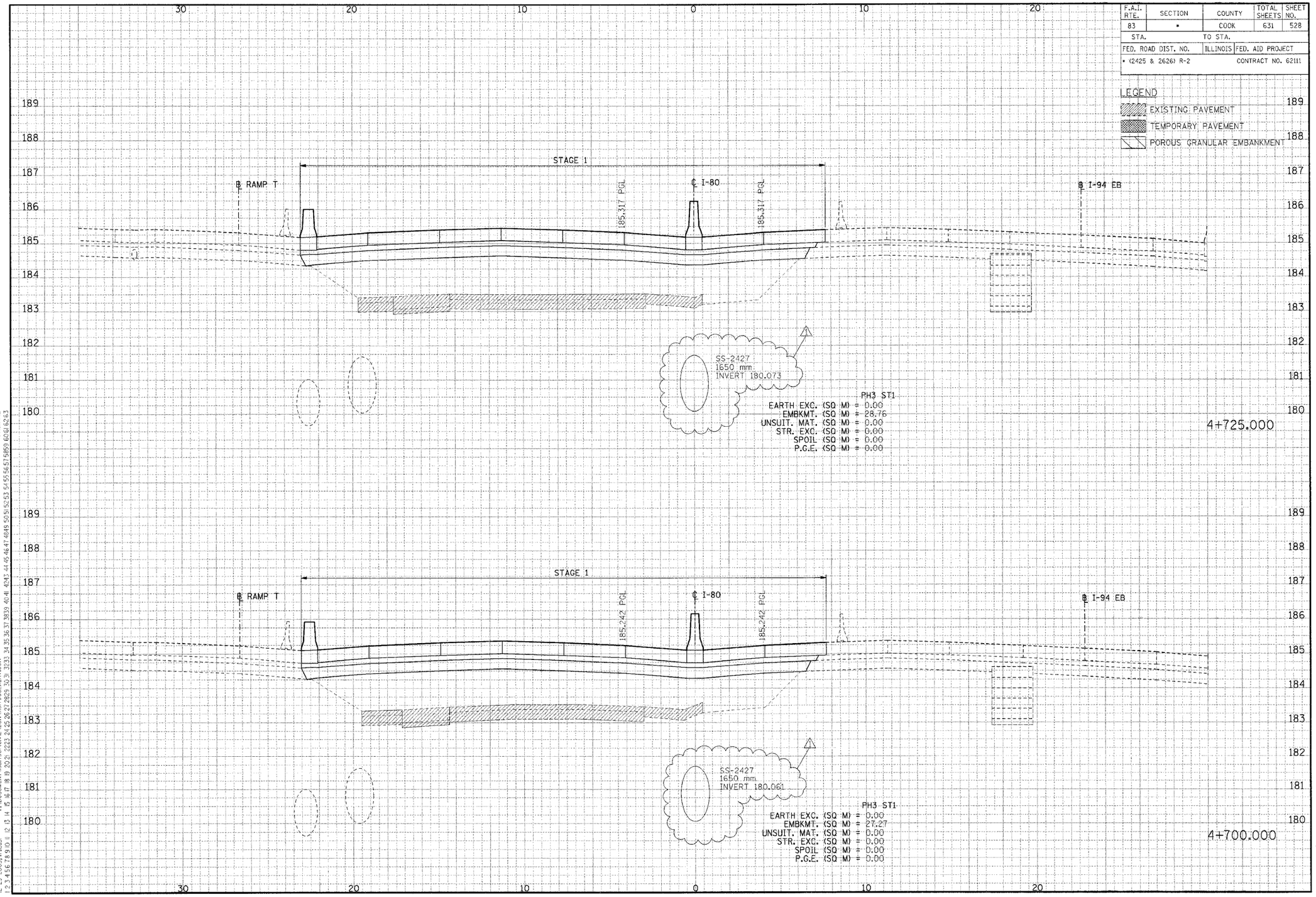

CROSS-SECTIONS FOR I-80/94

⚠ REVISED 01/04/2006, KV

FINAL SURVEY	SURVEYED	BY	DATE
NOTE BOOK	PLOTTED		
NO.	TEMPLATE		
	AREAS		
	AREAS CHECKED		

ORIGINAL SURVEY	SURVEYED	BY	DATE
NOTE BOOK	PLOTTED		
NO.	TEMPLATE		
	AREAS		
	AREAS CHECKED		

..\XR99002A.DGN, ..\XPT0002A.DGN, ..\PRT0002A.DGN, ..\XPT0032A.DGN, ..\XWT0032A.DGN, ..\XWT3002A.DGN, ..\XR3X022A.DGN, ..\XRT0022A.DGN, ..\XR99002A.DGN, ..\PR99002A.DGN, ..\PR3X002A.DGN, ..\PR3X032A.DGN, ..\XWT0032A.DGN, ..\TRT7022A.DGN, ..\
12-29-2005, 17:31:51 T:\DOCUMENT\93750\CIVIL\DGN\XS70032A.KV.DGN VARSHNKZ
1 2 3 4 5 6 7 8 9 10 11 12 13 14 15 16 17 18 19 20 21 22 23 24 25 26 27 28 29 30 31 32 33 34 35 36 37 38 39 40 41 42 43 44 45 46 47 48 49 50 51 52 53 54 55 56 57 58 59 60 61 62 63

F.A.I. RTE.	SECTION	COUNTY	TOTAL SHEETS	SHEET NO.
83	*	COOK	631	529
STA.		TO STA.		
FED. ROAD DIST. NO.		ILLINOIS	FED. AID PROJECT	
* (2425 & 2626) R-2			CONTRACT NO. 62111	

LEGEND

EXISTING PAVEMENT

TEMPORARY PAVEMENT

POROUS GRANULAR EMBANKMENT

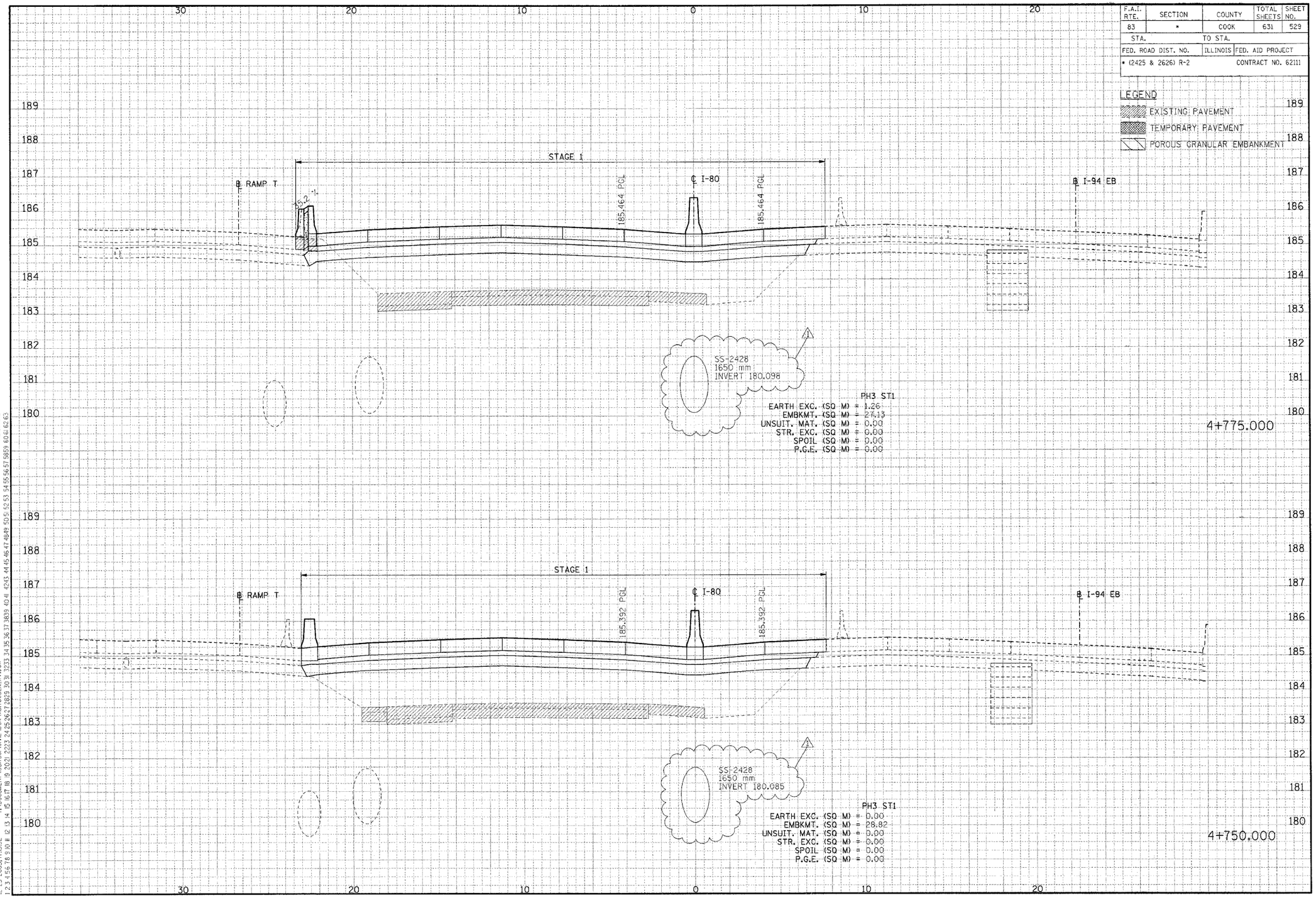

CROSS-SECTIONS FOR I-80/94

△1 REVISED 01/04/2006. KV

FINAL SURVEY | NOTE BOOK NO. | SURVEYED | PLOTTED | TEMPLATE | AREAS | AREAS CHECKED | BY | DATE

ORIGINAL SURVEY | NOTE BOOK NO. | SURVEYED | PLOTTED | TEMPLATE | AREAS | AREAS CHECKED | BY | DATE

..\XR99002A.DGN, ..\XPR30012A.DGN, ..\XPR30032A.DGN, ..\XW70032A.DGN, ..\XR70022A.DGN, ..\XR30022A.DGN, ..\XPR99002A.DGN, ..\XR99001A.DGN, ..\XPT70032A.DGN, ..\XPR70022A.DGN, ..\XPT70022A.DGN, ..\XW70032A.DGN, ..\XW70032A.DGN, ..\SL99R002A.DGN, ..\N99R002A.DGN, ..\TRT70022A.DGN, ..\

12-29-2005, 11:52 T:\DOCUMENT\93/750\CIVIL\DGN\XSTC032A.KV.DGN

1 2 3 4 5 6 7 8 9 10 11 12 13 14 15 16 17 18 19 20 21 22 23 24 25 26 27 28 29 30 31 32 33 34 35 36 37 38 39 40 41 42 43 44 45 46 47 48 49 50 51 52 53 54 55 56 57 58 59 60 61 62 63

F.A.I. RTE.	SECTION	COUNTY	TOTAL SHEETS	SHEET NO.
83	*	COOK	631	530
STA.		TO STA.		
FED. ROAD DIST. NO.		ILLINOIS	FED. AID PROJECT	
* (2425 & 2626) R-2			CONTRACT NO. 62111	

LEGEND

EXISTING PAVEMENT

TEMPORARY PAVEMENT

POROUS GRANULAR EMBANKMENT

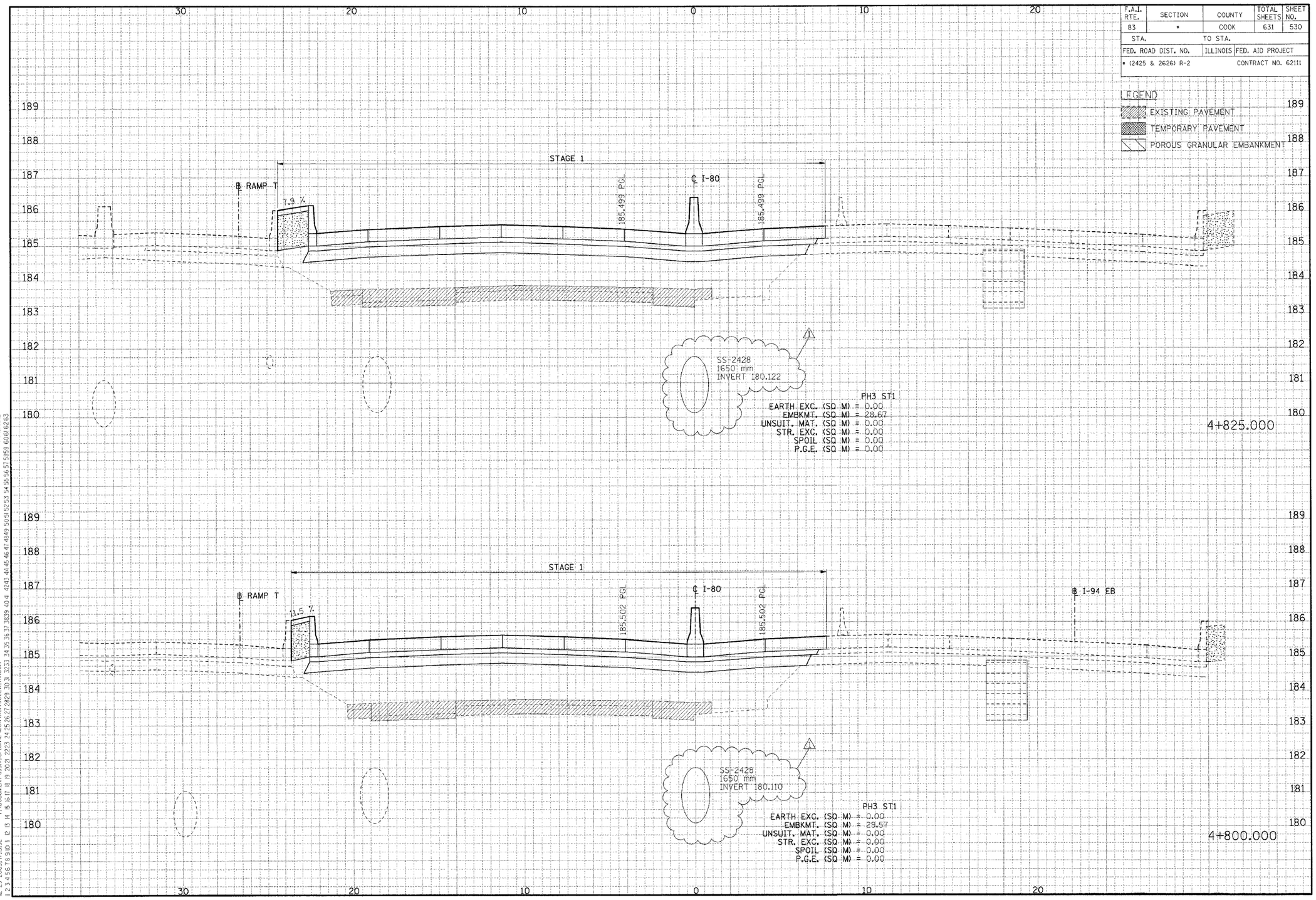

CROSS-SECTIONS FOR I-80/94

△1 REVISED 01/04/2006, KV

FINAL SURVEY: NOTE BOOK NO. | SURVEYED | PLOTTED | TEMPLATE | AREAS | AREAS CHECKED | BY | DATE

ORIGINAL SURVEY: NOTE BOOK NO. | SURVEYED | PLOTTED | TEMPLATE | AREAS | AREAS CHECKED | BY | DATE

..\XR9900E2A.DGN, ..\XPT00E2A.DGN, ..\PR7000E2A.DGN, ..\XPT0032A.DGN, ..\XW30002A.DGN, ..\XRT00222A.DGN, ..\XW30022A.DGN, ..\PR9900K2A.DGN, ..\PR3000E2A.DGN, ..\PR3002A.DGN, ..\PR3002

F.A.I. RTE.	SECTION	COUNTY	TOTAL SHEETS	SHEET NO.
83	*	COOK	631	531
STA.		TO STA.		
FED. ROAD DIST. NO.		ILLINOIS	FED. AID PROJECT	
* (2425 & 2626) R-2			CONTRACT NO. 62111	

LEGEND

EXISTING PAVEMENT

TEMPORARY PAVEMENT

POROUS GRANULAR EMBANKMENT

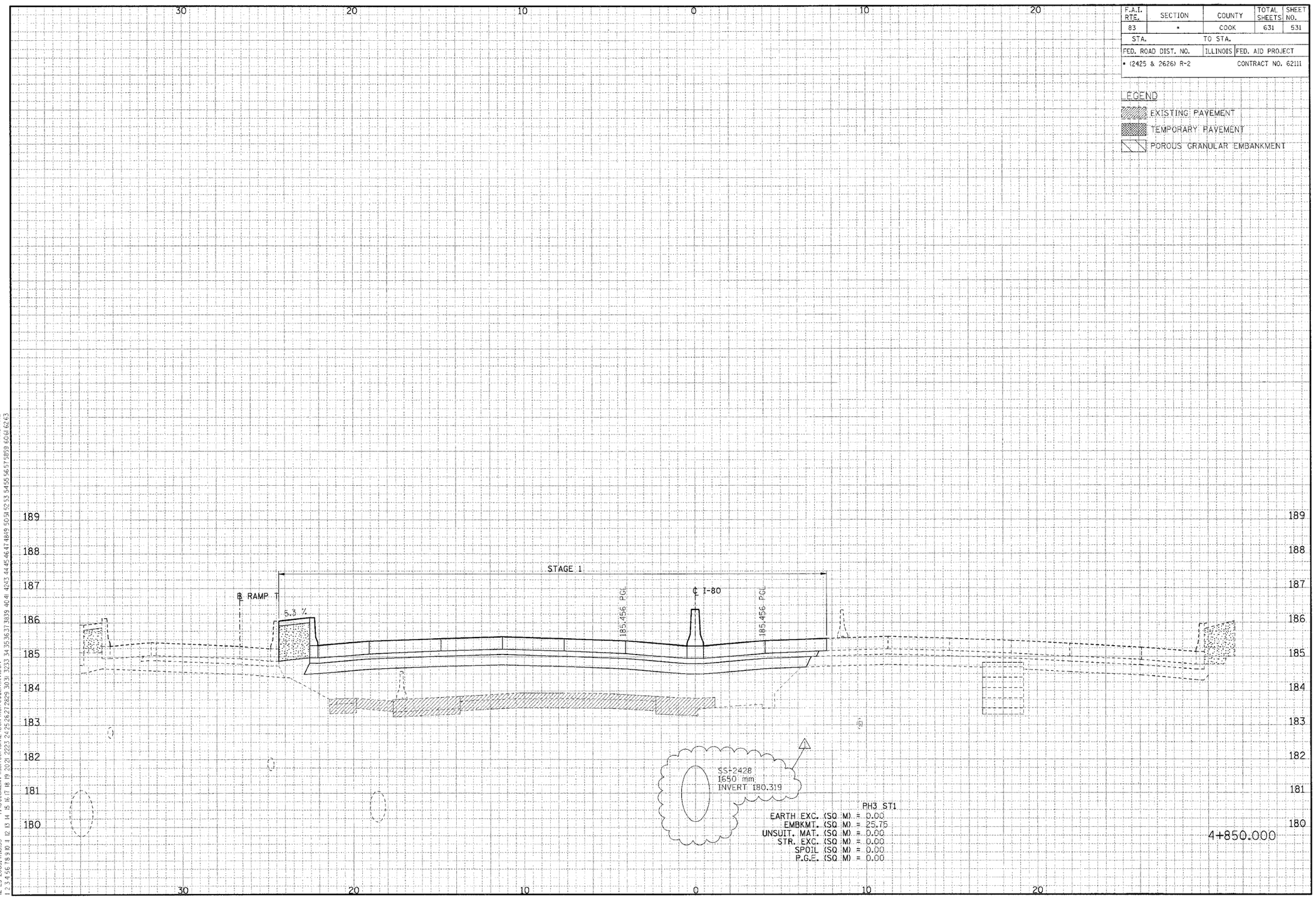

CROSS-SECTIONS FOR I-80/94

REVISED 01/04/2006, KV

ORIGINAL SURVEY	BY	DATE
NOTE BOOK NO.	SURVEYED	
	PLOTTED	
	DIGITIZE	
	AREAS	
	AREAS CHECKED	

FINAL SURVEY	BY	DATE
NOTE BOOK NO.	SURVEYED	
	PLOTTED	
	DIGITIZE	
	AREAS	
	AREAS CHECKED	

..\XR9900ZA.DGN, ..\PR70002A.DGN, ..\PR13002A.DGN, ..\PR13002A.DGN, ..\PR9900ZA.DGN, ..\VR30022A.DGN, ..\VR70022A.DGN, ..\VR3G002A.DGN, ..\VR70032A.DGN, ..\XR70022A.DGN, ..\XW70022A.DGN, ..\XL99R002A.DGN, ..\699R002A.DGN, ..\TR17022A.DGN, ..\
12-29-2005, 14:53 T:\DOCUMENT\SUTTON\CIVIL\DGN\XS\T032A.XVDGN YASHWZ
1 2 3 4 5 6 7 8 9 10 11 12 13 14 15 16 17 18 19 20 21 22 23 24 25 26 27 28 29 30 31 32 33 34 35 36 37 38 39 40 41 42 43 44 45 46 47 48 49 50 51 52 53 54 55 56 57 58 59 60 61 62 63

F.A.I. RTE.	SECTION	COUNTY	TOTAL SHEETS	SHEET NO.
83	*	COOK	631	532
STA.		TO STA.		
FED. ROAD DIST. NO.		ILLINOIS	FED. AID PROJECT	
* (2425 & 2626) R-2			CONTRACT NO. 62111	

LEGEND

EXISTING PAVEMENT

TEMPORARY PAVEMENT

POROUS GRANULAR EMBANKMENT

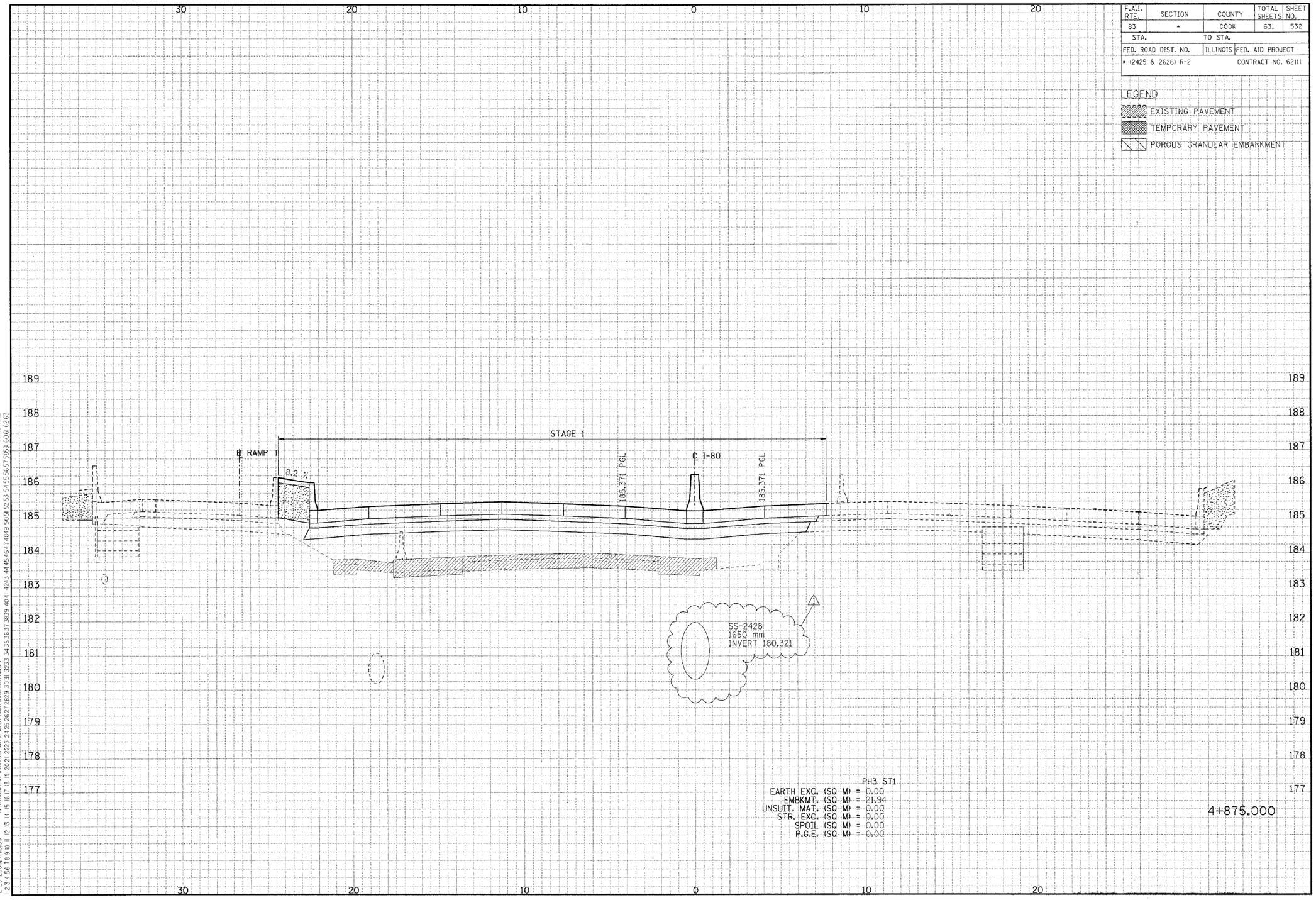

CROSS-SECTIONS FOR I-80/94

1 REVISED 01/04/2006, KV

FINAL SURVEY		BY	DATE
NOTE BOOK NO.	SURVEYED		
	PLOTTED		
	TEMPLATE		
	AREAS		
	AREAS CHECKED		

ORIGINAL SURVEY		BY	DATE
NOTE BOOK NO.	SURVEYED		
	PLOTTED		
	TEMPLATE		
	AREAS		
	AREAS CHECKED		

..\VR99002A.DGN, ..\VPT0002A.DGN, ..\VPR70002A.DGN, ..\VPT0032A.DGN, ..\VW30002A.DGN, ..\VR70022A.DGN, ..\VR30022A.DGN, ..\VR99002A.DGN, ..\VR30002A.DGN, ..\VR30032A.DGN, ..\VW70032A.DGN, ..\SL99R02A.DGN, ..\W99R02A.DGN, ..\TR77027A.DGN, ..\
12-29-2005, ITA353 T:\DOCUMENT\93750\CIVIL\DGN\XSIT0032A.KV.DGN VARSHNKZ
2 3 4 5 6 7 8 9 10 11 12 13 14 15 16 17 18 19 20 21 22 23 24 25 26 27 28 29 30 31 32 33 34 35 36 37 38 39 40 41 42 43 44 45 46 47 48 49 50 51 52 53 54 55 56 57 58 59 60 61 62 63

F.A.I. RTE.	SECTION	COUNTY	TOTAL SHEETS	SHEET NO.
83	*	COOK	631	533
STA.		TO STA.		
FED. ROAD DIST. NO.		ILLINOIS	FED. AID PROJECT	
* (2425 & 2626) R-2			CONTRACT NO. 62111	

LEGEND

EXISTING PAVEMENT

TEMPORARY PAVEMENT

POROUS GRANULAR EMBANKMENT

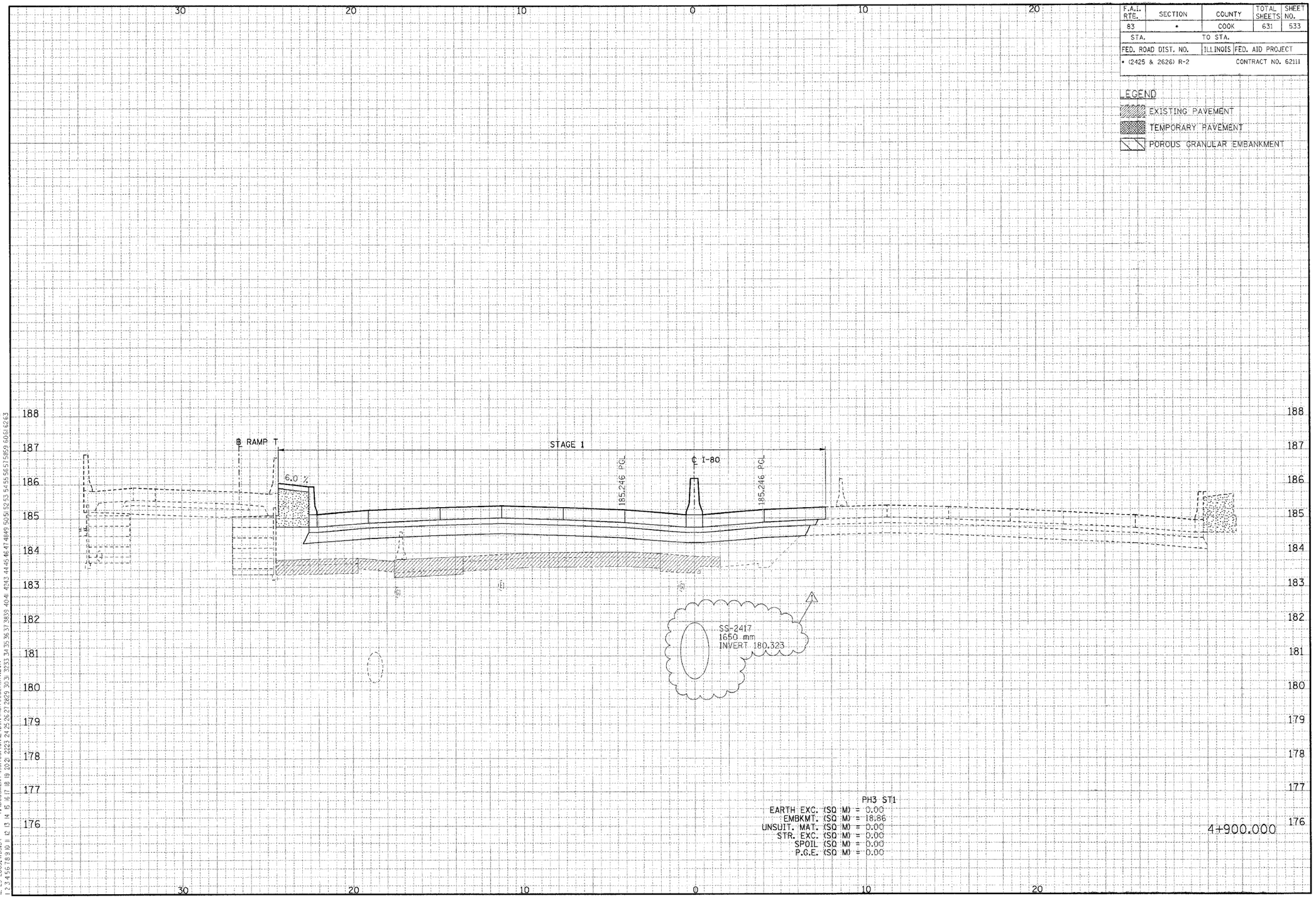

PH3 ST1
EARTH EXC. (SQ M) = 0.00
EMBKMT. (SQ M) = 18.86
UNSUIT. MAT. (SQ M) = 0.00
STR. EXC. (SQ M) = 0.00
SPOIL (SQ M) = 0.00
P.G.E. (SQ M) = 0.00

CROSS-SECTIONS FOR I-80/94

REVISED 01/04/2006, KV

FINAL SURVEY | SURVEYED | PLOTTED | TEMPLATE | AREAS | AREAS CHECKED | BY | DATE

ORIGINAL SURVEY | SURVEYED | PLOTTED | TEMPLATE | AREAS | AREAS CHECKED | BY | DATE

NOTE BOOK NO.

..\X99SG02A.DGN, ..\XPT0002A.DGN, ..\XPH3002A.DGN, ..\XPT0032A.DGN, ..\XR3002A.DGN, ..\XR3002A.DGN, ..\XR3002

F.A.I. RTE.	SECTION	COUNTY	TOTAL SHEETS	SHEET NO.
83	*	COOK	631	534
STA.		TO STA.		
FED. ROAD DIST. NO.		ILLINOIS	FED. AID PROJECT	
* (2425 & 2626) R-2			CONTRACT NO. 62111	

LEGEND

EXISTING PAVEMENT

TEMPORARY PAVEMENT

POROUS GRANULAR EMBANKMENT

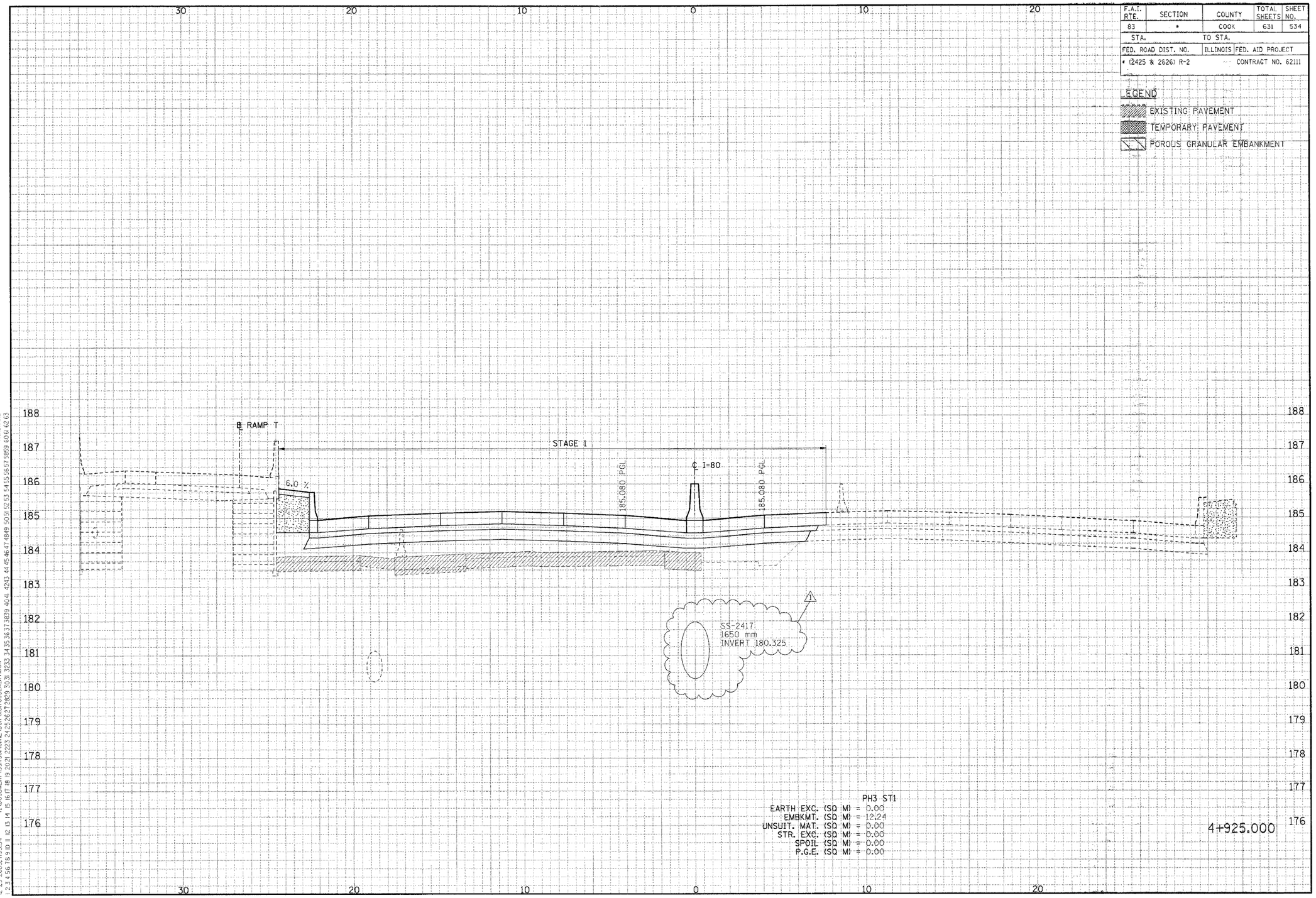

CROSS-SECTIONS FOR I-80/94

REVISED 01/04/2006, KV

FINAL SURVEY		BY	DATE
NOTE BOOK NO.	SURVEYED		
	PLOTTED		
	TEMPLATE		
	AREAS		
	AREAS CHECKED		

ORIGINAL SURVEY		BY	DATE
NOTE BOOK NO.	SURVEYED		
	PLOTTED		
	TEMPLATE		
	AREAS		
	AREAS CHECKED		

..\VR99002A.DGN, ..\VPT0002A.DGN, ..\VPRT0032A.DGN, ..\VPT0032A.DGN, ..\VW03002A.DGN, ..\VH07002A.DGN, ..\VR03002A.DGN, ..\PR99002A.DGN, ..\PR03002A.DGN, ..\DR03002A.DGN, ..\XW17032A.DGN, ..\SL99R02A.DGN, ..\W99R02A.DGN, ..\TR17022A.DGN, ..\

02-29-2005, 17:35:54 T:\DOCUMENT\93750\CIVIL\DGN\SH00032A.KV.DGN VARSHNKZ

1 2 3 4 5 6 7 8 9 10 11 12 13 14 15 16 17 18 19 20 21 22 23 24 25 26 27 28 29 30 31 32 33 34 35 36 37 38 39 40 41 42 43 44 45 46 47 48 49 50 51 52 53 54 55 56 57 58 59 60 61 62 63

F.A.I. RTE.	SECTION	COUNTY	TOTAL SHEETS	SHEET NO.
83	*	COOK	631	535
STA.		TO STA.		
FED. ROAD DIST. NO.		ILLINOIS	FED. AID PROJECT	
* (2425 & 2626) R-2			CONTRACT NO. 62111	

LEGEND

EXISTING PAVEMENT

TEMPORARY PAVEMENT

POROUS GRANULAR EMBANKMENT

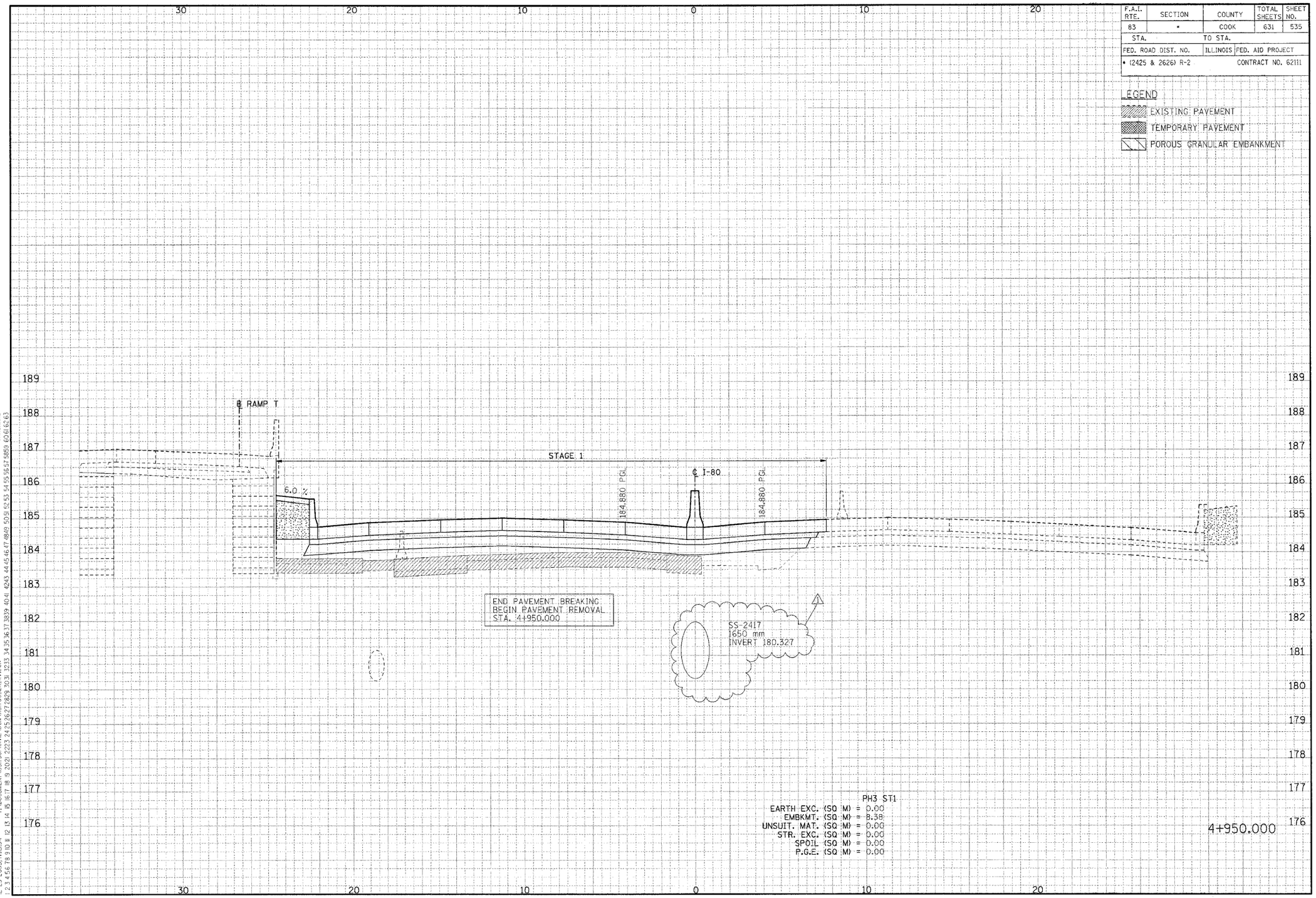

PH3 ST1

EARTH EXC. (SQ M)	= 0.00
EMBKMT. (SQ M)	= 8.38
UNSUIT. MAT. (SQ M)	= 0.00
STR. EXC. (SQ M)	= 0.00
SPOIL (SQ M)	= 0.00
P.G.E. (SQ M)	= 0.00

CROSS-SECTIONS FOR I-80/94

1 REVISED 01/04/2006, KV

FINAL SURVEY	BY	DATE
SURVEYED		
PLOTTED		
TEMPLATE		
AREAS		
AREAS CHECKED		

NOTE BOOK NO.

..\VR99002A.DGN, ..\VR70002A.DGN, ..\VR70032A.DGN, ..\VW70032A.DGN, ..\VW30002A.DGN, ..\VR70022A.DGN, ..\VR30022A.DGN, ..\VR99002A.DGN, ..\VR99002A.DGN, ..\VR99002A.DGN, ..\DR30032A.DGN, ..\VWF0032A.DGN, ..\SL99R002A.DGN, ..\K99R002A.DGN, ..\TRT7002A.DGN, ..\

ORIGINAL SURVEY	BY	DATE
SURVEYED		
PLOTTED		
TEMPLATE		
AREAS		
AREAS CHECKED		

NOTE BOOK NO.

..\VR99002A.DGN, ..\VR70002A.DGN, ..\VR70032A.DGN, ..\VW70032A.DGN, ..\VW30002A.DGN, ..\VR70022A.DGN, ..\VR30022A.DGN, ..\VR99002A.DGN, ..\VR99002A.DGN, ..\VR99002A.DGN, ..\DR30032A.DGN, ..\VWF0032A.DGN, ..\SL99R002A.DGN, ..\K99R002A.DGN, ..\TRT7002A.DGN, ..\

12-29-2005,11:55:4 I:\DOCUMENT\03T50\CIVL\DGN\S7T0032A.KV.DGN VASHWK2

2 3 4 5 6 7 8 9 10 11 12 13 14 15 16 17 18 19 20 21 22 23 24 25 26 27 28 29 30 31 32 33 34 35 36 37 38 39 40 41 42 43 44 45 46 47 48 49 50 51 52 53 54 55 56 57 58 59 60 61 62 63

F.A.I. RTE.	SECTION	COUNTY	TOTAL SHEETS	SHEET NO.
83	*	COOK	631	536
STA.		TO STA.		
FED. ROAD DIST. NO.		ILLINOIS	FED. AID PROJECT	
* (2425 & 2626) R-2			CONTRACT NO. 62111	

LEGEND

EXISTING PAVEMENT

TEMPORARY PAVEMENT

POROUS GRANULAR EMBANKMENT

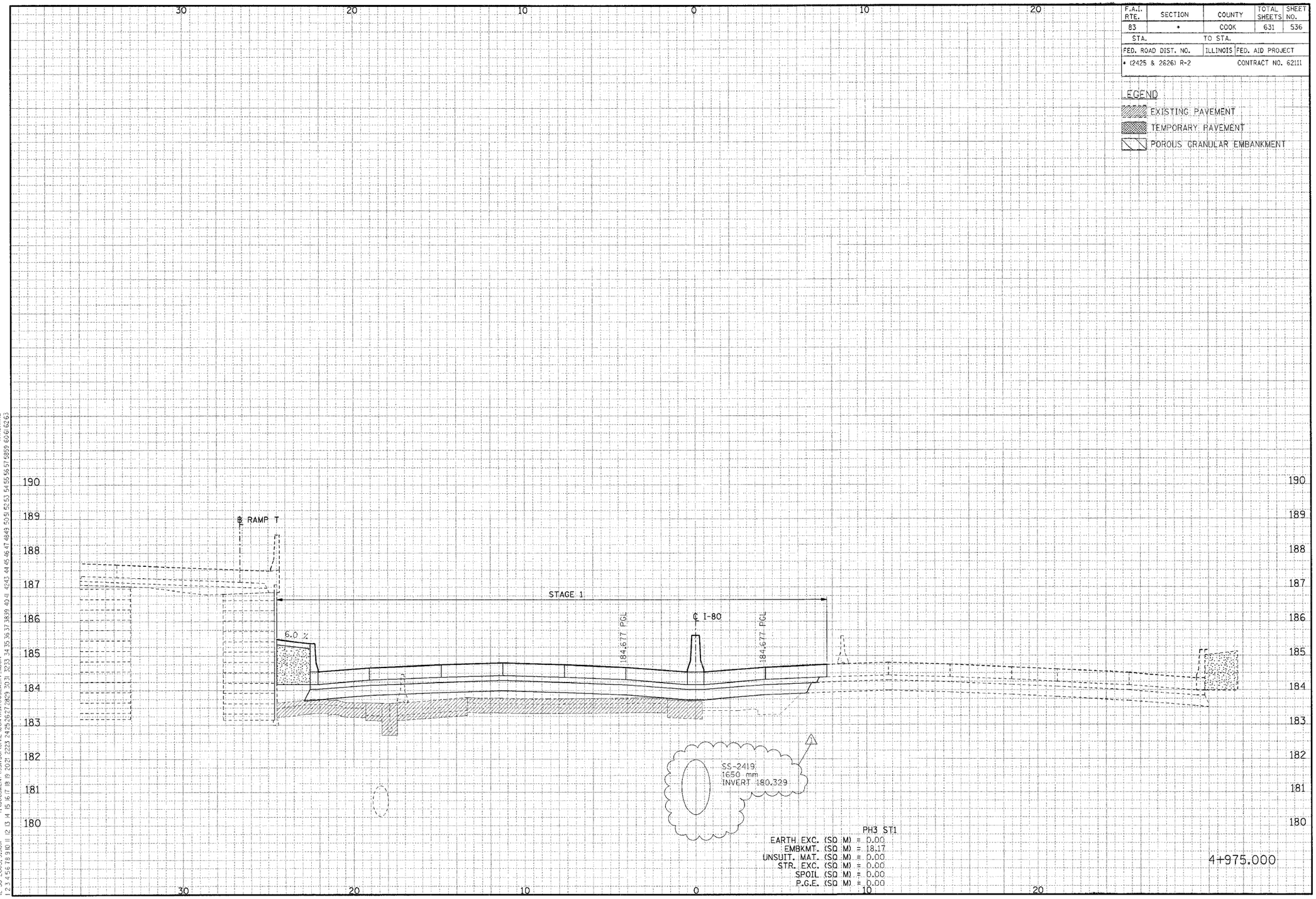

CROSS-SECTIONS FOR I-80/94

REVISED 01/04/2006, KV

FINAL SURVEY — NOTE BOOK NO. — SURVEYED — PLOTTED — TEMPLATE — AREAS — AREAS CHECKED — BY — DATE

ORIGINAL SURVEY — NOTE BOOK NO. — SURVEYED — PLOTTED — TEMPLATE — AREAS — AREAS CHECKED — BY — DATE

..\VR99002A.DGN, ..\VPT0002A.DGN, ..\PRT0002A.DGN, ..\VPT0032A.DGN, ..\VW10032A.DGN, ..\VR10002A.DGN, ..\VR30022A.DGN, ..\PR99302A.DGN, ..\PR30002A.DGN, ..\DR30032A.DGN, ..\VW17032A.DGN, ..\SL99R02A.DGN, ..\N99R02A.DGN, ..\TRT7022A.DGN, ..\
12-30-2005, 9:19:01 T:\DOCUMENT\93150\CIVIL\DGN\VST0032A_KV.DGN VARSHNKZ

F.A.U. RTE.	SECTION	COUNTY	TOTAL SHEETS	SHEET NO.
83	*	COOK	631	537
STA.		TO STA.		
FED. ROAD DIST. NO.		ILLINOIS	FED. AID PROJECT	
* (2425 & 2626) R-2			CONTRACT NO. 62111	

LEGEND

- EXISTING PAVEMENT
- TEMPORARY PAVEMENT
- POROUS GRANULAR EMBANKMENT

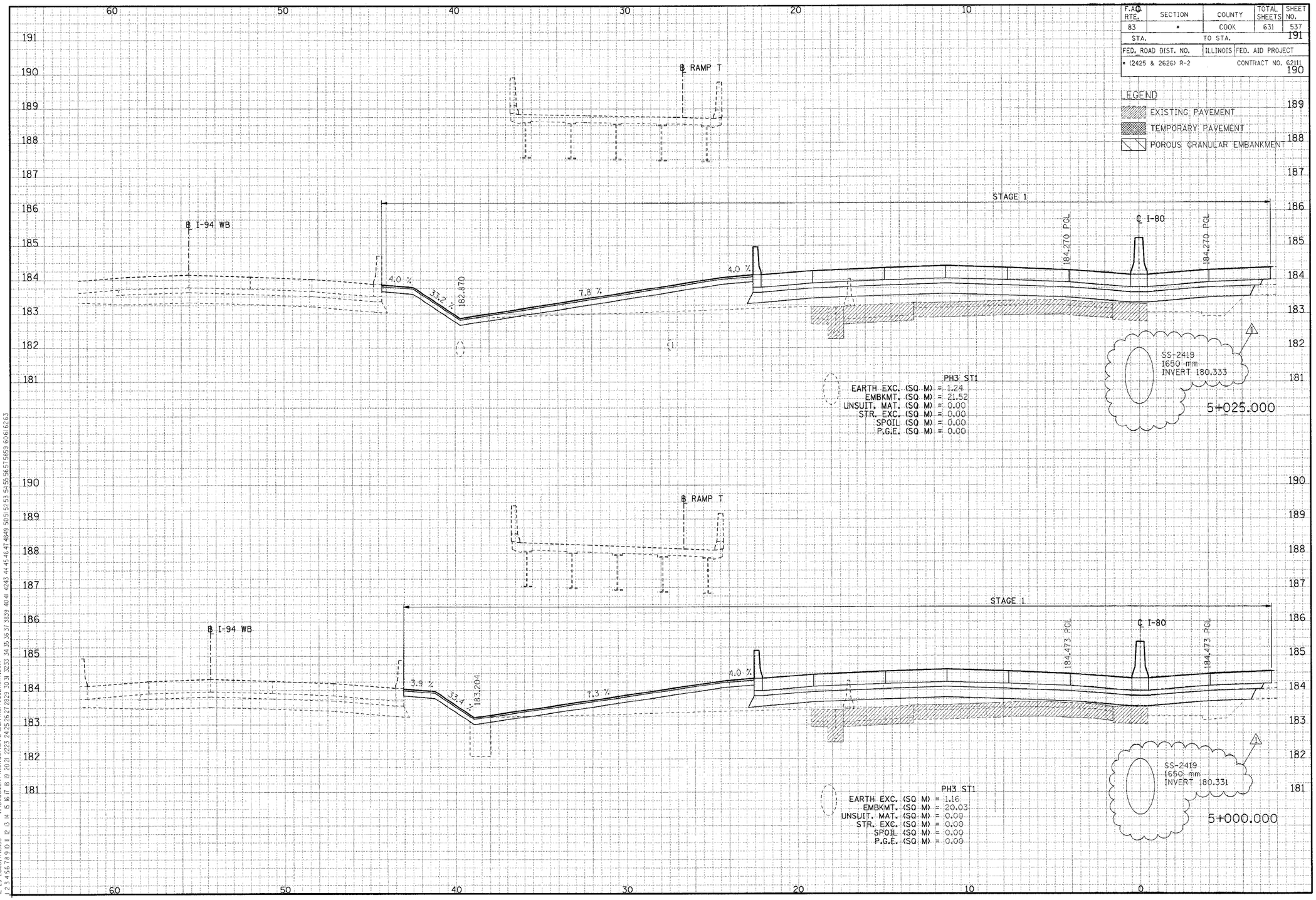

CROSS-SECTIONS FOR I-80/94

1 REVISED 01/04/2006, KV

FINAL SURVEY		BY	DATE
NOTE BOOK	SURVEYED		
	PLOTTED		
	TEMPLATE		
	AREAS		
NO.	AREAS CHECKED		

\\X99GR02A.DGN, \\X99GR02A.DGN, \\TRT7022A.DGN, \\PR3002A.DGN, \\PR3002A.DGN, \\PR99G02A.DGN, \\VH3G02A.DGN, \\VH3G02A.DGN, \\VH3

F.A.U. RTE.	SECTION	COUNTY	TOTAL SHEETS	SHEET NO.
83	*	COOK	631	538
STA.		TO STA.		
FED. ROAD DIST. NO.		ILLINOIS	FED. AID PROJECT	
* (2425 & 2626) R-2			CONTRACT NO. 62111	

LEGEND

EXISTING PAVEMENT

TEMPORARY PAVEMENT

POROUS GRANULAR EMBANKMENT

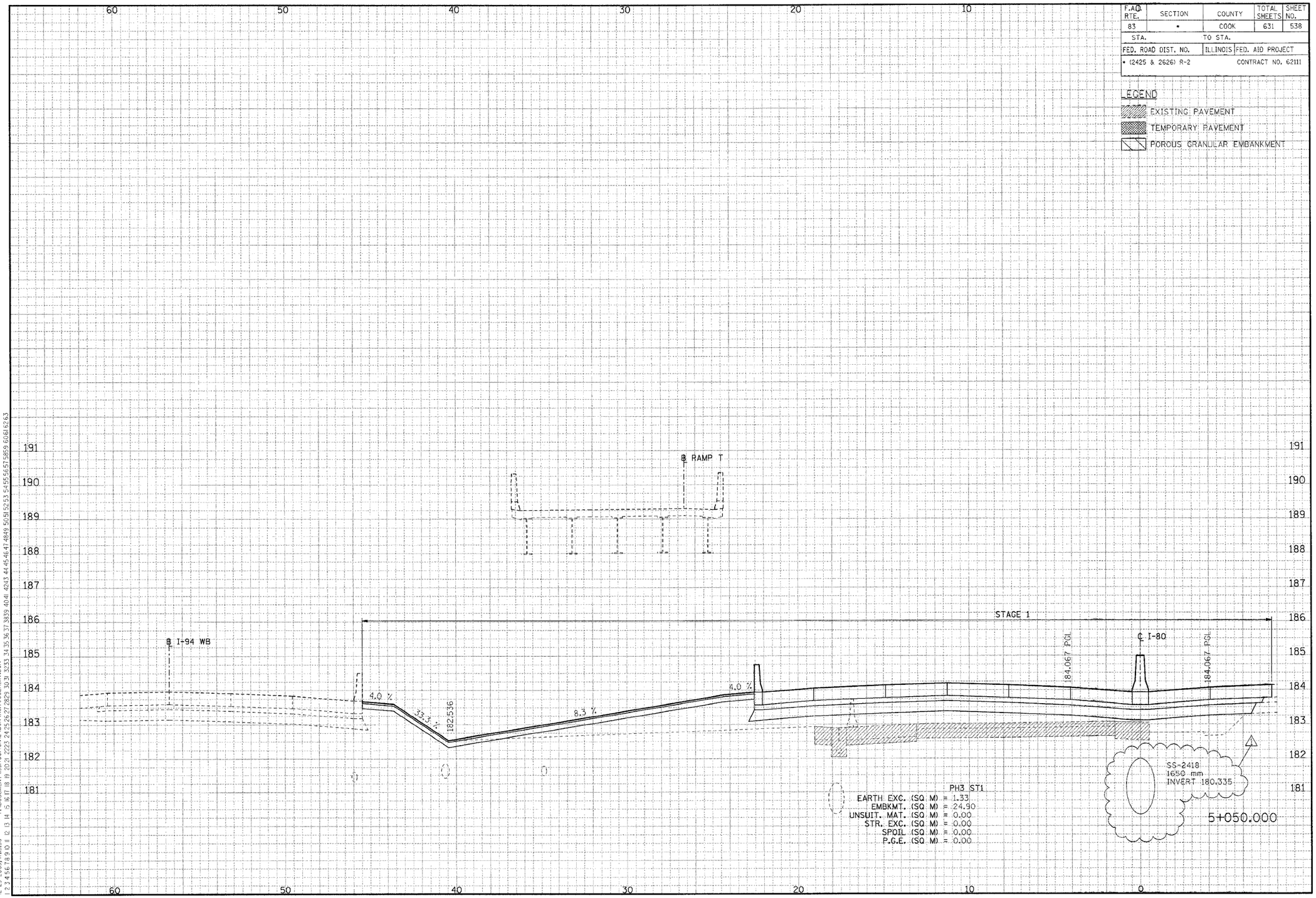

CROSS-SECTIONS FOR I-80/94

REVISED 01/04/2006, KV

FINAL SURVEY		BY	DATE
NOTE BOOK NO.	SURVEYED		
	PLOTTED		
	TEMPLATE		
	AREAS		
	AREAS CHECKED		

ORIGINAL SURVEY		BY	DATE
NOTE BOOK NO.	SURVEYED		
	PLOTTED		
	TEMPLATE		
	AREAS		
	AREAS CHECKED		

..\XR99002A.DGN, ..\XR17002A.DGN, ..\XR17003A.DGN, ..\XR17003A.DGN, ..\XR17002A.DGN, ..\XR17003A.DGN, ..\XR17002A.DGN, ..\XR30022A.DGN, ..\XR99002A.DGN, ..\PR30002A.DGN, ..\DR03002A.DGN, ..\XWR00324.DGN, ..\SL99H002A.DGN, ..\W09H002A.DGN, ..\TR17022A.DGN, ..\
12-29-2005, 18:56 T:\DOCUMENT\93150\CIVIL\DGN\X3T0032A.KV.DGN
1 2 3 4 5 6 7 8 9 0 1 2 3 4 5 6 7 8 9 0 2 0 2 0 2 2 2 3 2 4 2 5 2 6 2 7 2 8 2 9 3 0 3 1 3 2 3 3 3 4 3 5 3 6 3 7 3 8 3 9 4 0 4 1 4 2 4 3 4 4 4 5 4 6 4 7 4 8 4 9 5 0 5 1 5 2 5 3 5 4 5 5 5 6 5 7 5 8 5 9 6 0 6 1 6 2 6 3
VARSINK.Z

F.A.U. RTE.	SECTION	COUNTY	TOTAL SHEETS	SHEET NO.
83	*	COOK	631	539
STA.		TO STA.		
FED. ROAD DIST. NO.		ILLINOIS	FED. AID PROJECT	
* (2425 & 2626) R-2			CONTRACT NO. 62111	

LEGEND

EXISTING PAVEMENT

TEMPORARY PAVEMENT

POROUS GRANULAR EMBANKMENT

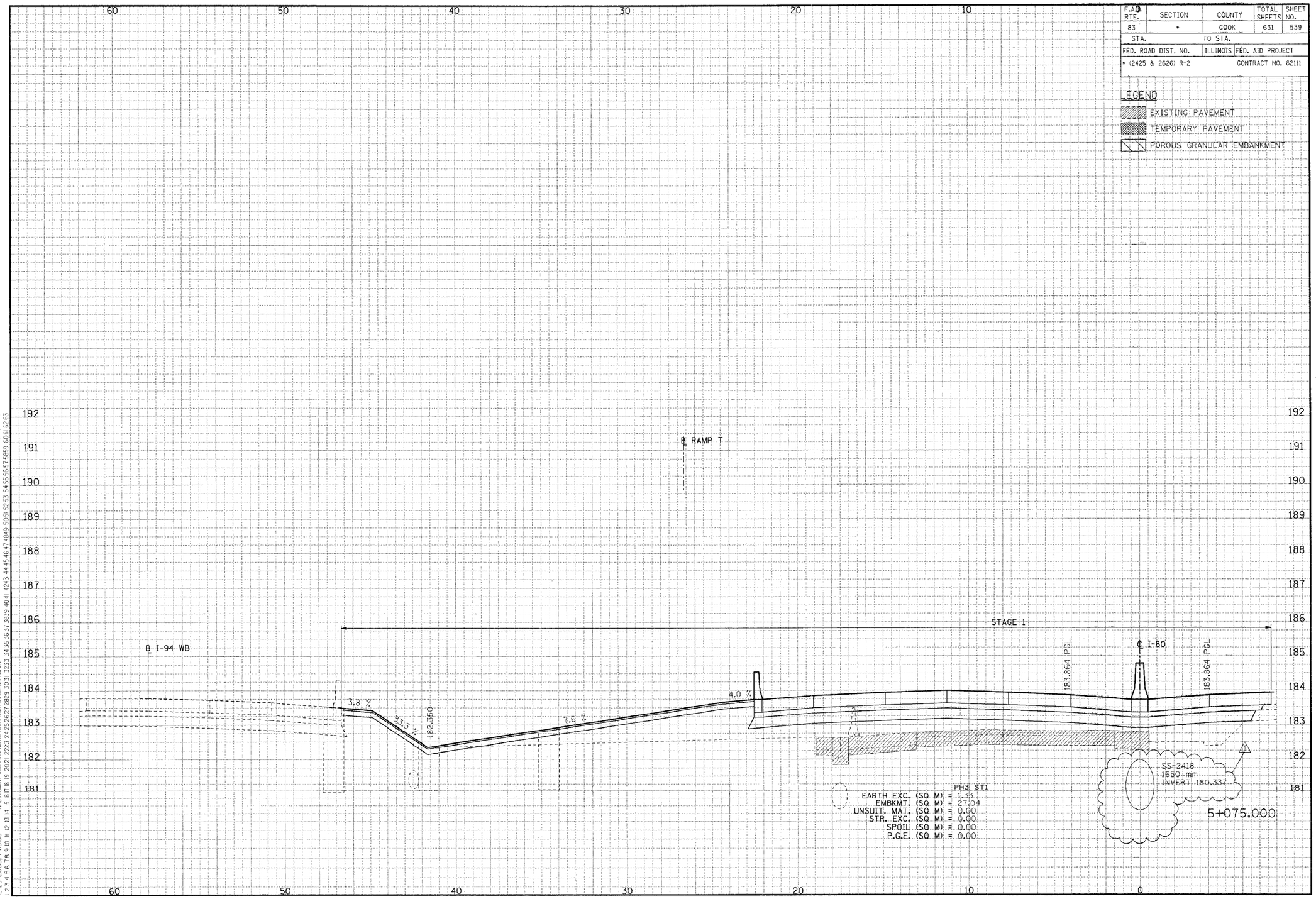

CROSS-SECTIONS FOR I-80/94

1 REVISED 01/04/2006, KV

ORIGINAL SURVEY		BY	DATE
NOTE BOOK NO.	SURVEYED		
	PLOTTED		
	TEMPLATE		
	AREAS		
	AREAS CHECKED		

FINAL SURVEY		BY	DATE
NOTE BOOK NO.	SURVEYED		
	PLOTTED		
	TEMPLATE		
	AREAS		
	AREAS CHECKED		

..\VR99002A.DGN, ..\PR70022A.DGN, ..\PR70022A.DGN, ..\VR70032A.DGN, ..\VW70032A.DGN, ..\VR70022A.DGN, ..\VR30022A.DGN, ..\PR99002A.DGN, ..\PR30022A.DGN, ..\VR99002A.DGN, ..\DR30032A.DGN, ..\VW70032A.DGN, ..\SL99R02A.DGN, ..\N99R02A.DGN, ..\TR77022A.DGN, ..\
12-29-2005, 17:13:56 T:\DOCUMENT\93750\CIVIL\DGN\VS70032A.KV.DGN VARSINKZ
1 2 3 4 5 6 7 8 9 10 11 12 13 14 15 16 17 18 19 20 21 22 23 24 25 26 27 28 29 30 31 32 33 34 35 36 37 38 39 40 41 42 43 44 45 46 47 48 49 50 51 52 53 54 55 56 57 58 59 60 61 62 63

F.A.U. RTE.	SECTION	COUNTY	TOTAL SHEETS	SHEET NO.
83	*	COOK	631	540
STA.		TO STA.		
FED. ROAD DIST. NO.		ILLINOIS	FED. AID PROJECT	
* (2425 & 2626) R-2			CONTRACT NO. 62111	

LEGEND

EXISTING PAVEMENT

TEMPORARY PAVEMENT

POROUS GRANULAR EMBANKMENT

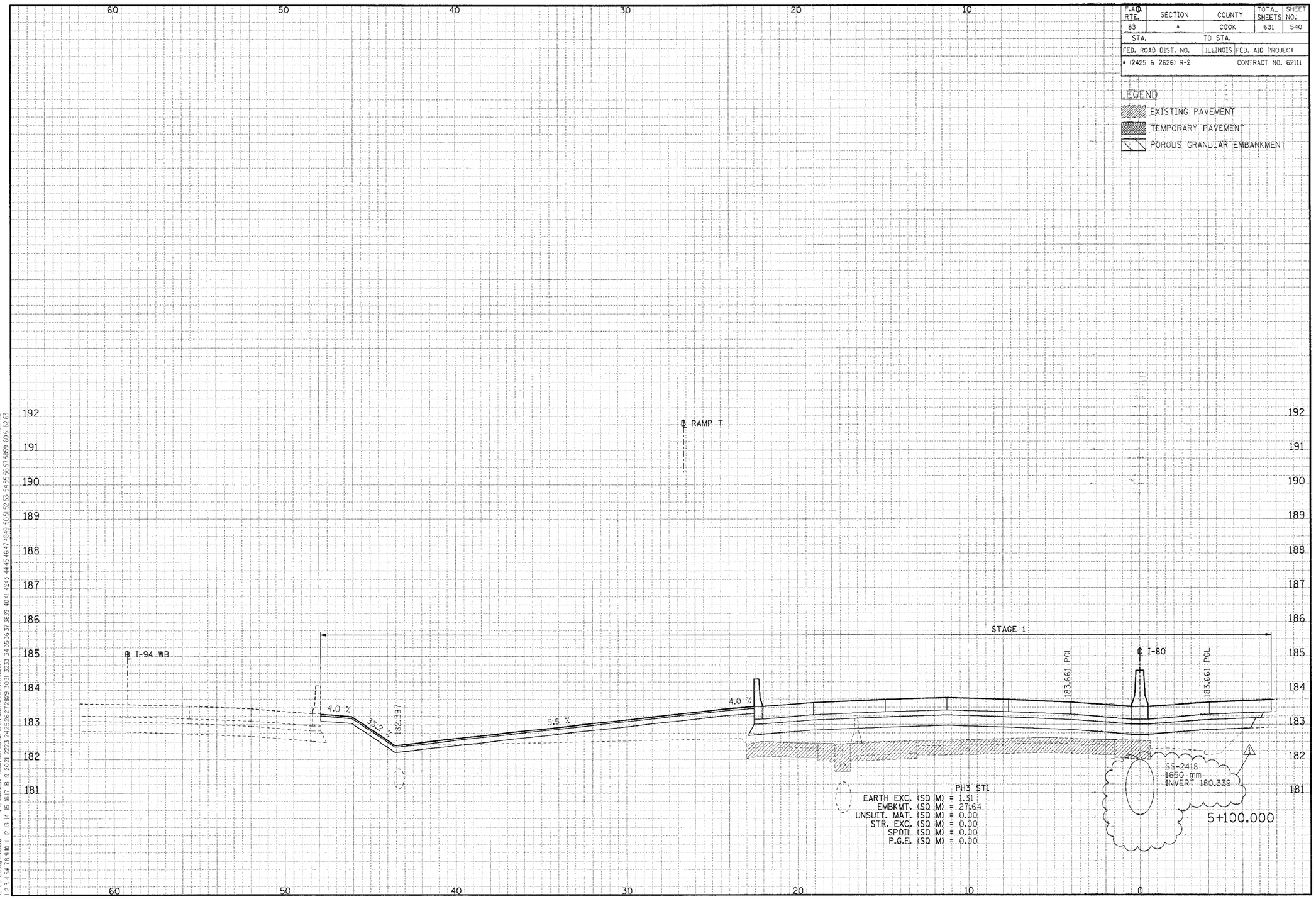

CROSS-SECTIONS FOR I-80/94

REVISED 01/04/2006, KV

FINAL SURVEY	BY	DATE
NOTE BOOK NO.	SURVEYED	
	PLOTTED	
	TEMPLATE	
	AREAS	
	AREAS CHECKED	

ORIGINAL SURVEY	BY	DATE
NOTE BOOK NO.	SURVEYED	
	PLOTTED	
	TEMPLATE	
	AREAS	
	AREAS CHECKED	

..\XR99002A.DGN, ..\XP17002A.DGN, ..\XP17002A.DGN, ..\XP17003A.DGN, ..\XW30002A.DGN, ..\XW70032A.DGN, ..\SL99R002A.DGN, ..\G99R002A.DGN, ..\TR77022A.DGN, ..\
..\XR99002A.DGN, ..\DR130032A.DGN, ..\XW70032A.DGN, ..\PR99002A.DGN, ..\PR130012A.DGN, ..\PR130012A.DGN, VARSPARZ
..\XR130022A.DGN, ..\HR170022A.DGN, ..\XW30002A.DGN, ..\XP17003A.DGN, ..\XS170032A.DGN
12-29-2005,10:56 T:\DOCUMENT\93750\CIVIL\DGN\XS170032A.DGN

F.A.U. RTE.	SECTION	COUNTY	TOTAL SHEETS	SHEET NO.
83	*	COOK	631	541
STA.		TO STA.		
FED. ROAD DIST. NO.		ILLINOIS	FED. AID PROJECT	
* (2425 & 2626) R-2			CONTRACT NO. 62111	

LEGEND

EXISTING PAVEMENT

TEMPORARY PAVEMENT

POROUS GRANULAR EMBANKMENT

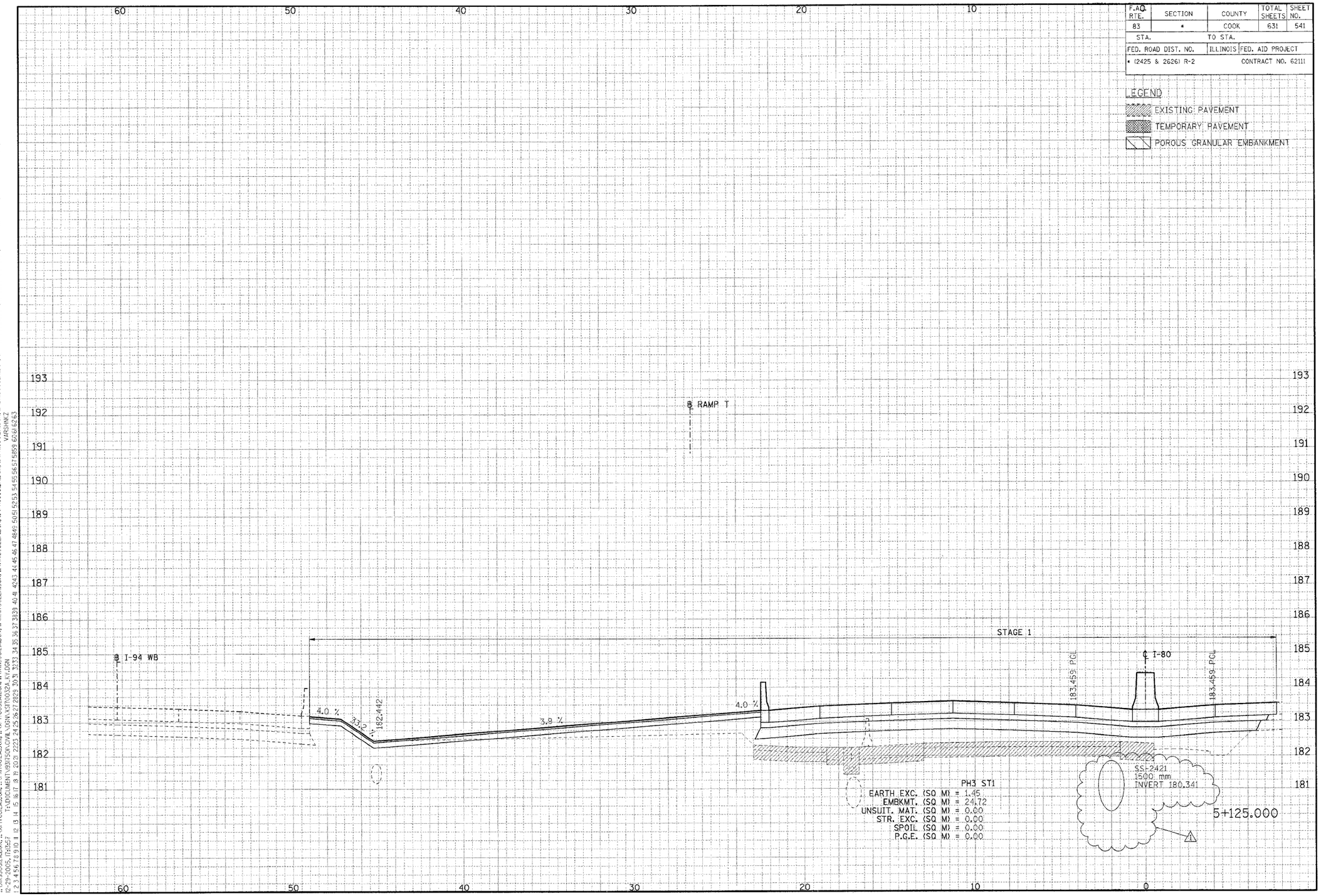

CROSS-SECTIONS FOR I-80/94

1 REVISED 01/04/2006. KV

FINAL SURVEY		BY	DATE
NOTE BOOK	SURVEYED		
	PLOTTED		
	TEMPLATE		
	AREAS		
	AREAS CHECKED		

ORIGINAL SURVEY		BY	DATE
NOTE BOOK	SURVEYED		
	PLOTTED		
	TEMPLATE		
	AREAS		
	AREAS CHECKED		

..\XR99002A.DGN..\XPIT002A.DGN..\PRIT002A.DGN..\XPIT0032A.DGN..\XWI3002A.DGN..\XRIT0022A.DGN..\XRI39022A.DGN..\PR99002A.DGN..\PRI3002A.DGN..\WIT0032A.DGN..\OR3002A.DGN..\SL99R002A.DGN..\V99R002A.DGN..\TRI7022A.DGN..\

12-29-2005,11:57 T:\DOCUMENTS\93150\CIVIL\DGN\X3IT0032A.KV.DGN VARSHNEY

1 2 3 4 5 6 7 8 9 0 1 2 3 4 5 6 7 8 9 0 2 2 2 3 2 4 2 5 2 6 2 7 2 8 2 9 3 0 3 1 3 2 3 3 3 4 3 5 3 6 3 7 3 8 3 9 4 0 4 1 4 2 4 3 4 4 4 5 4 6 4 7 4 8 4 9 5 0 5 1 5 2 5 3 5 4 5 5 5 6 5 7 5 8 5 9 6 0 6 1 6 2 6 3

F.A.U. RTE.	SECTION	COUNTY	TOTAL SHEETS	SHEET NO.
83	*	COOK	631	542
STA.		TO STA.		
FED. ROAD DIST. NO.		ILLINOIS	FED. AID PROJECT	
* (2425 & 2626) R-2			CONTRACT NO. 62111	

LEGEND

- EXISTING PAVEMENT
- TEMPORARY PAVEMENT
- POROUS GRANULAR EMBANKMENT

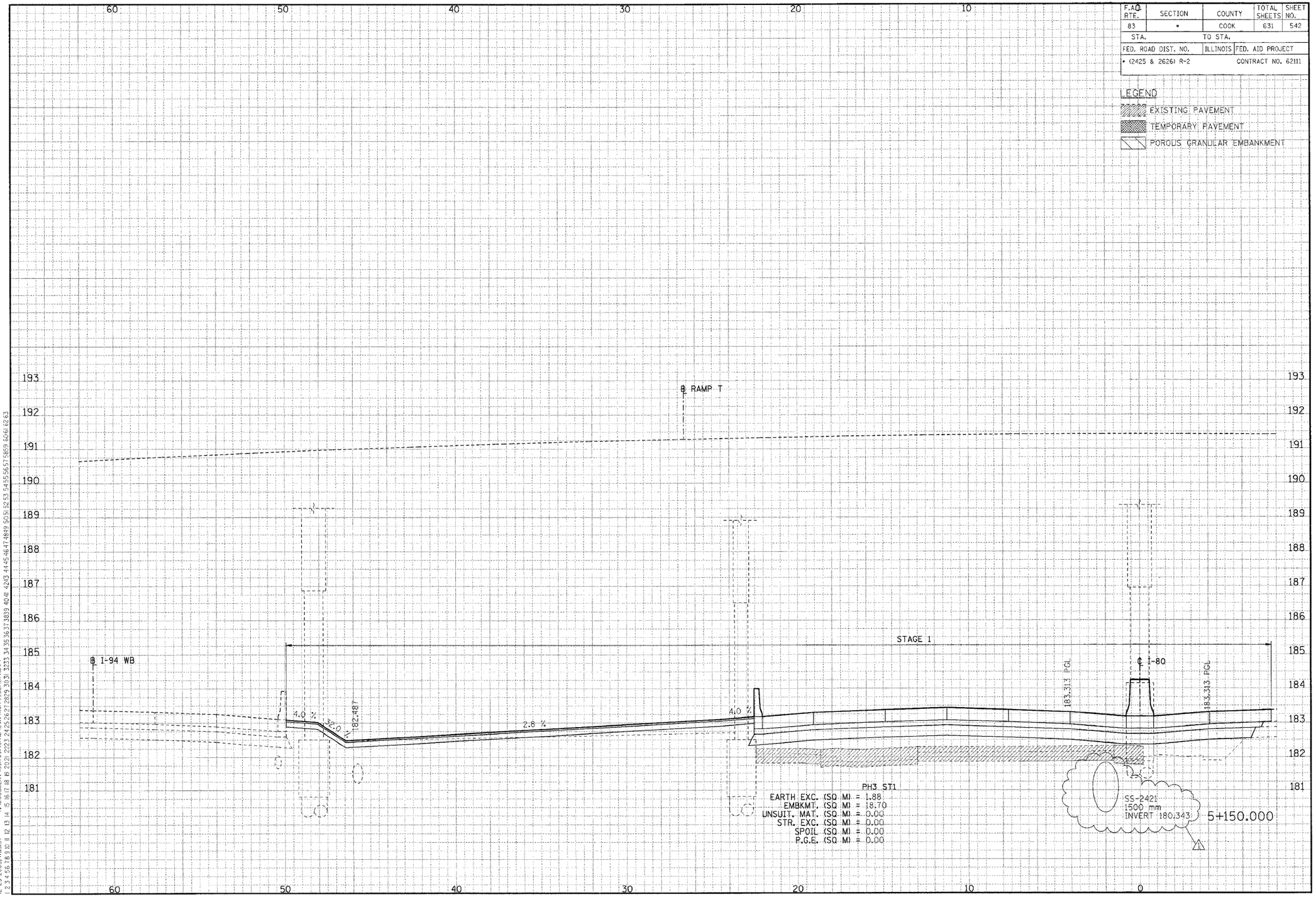

CROSS-SECTIONS FOR I-80/94

1 REVISED 01/04/2006, KV

FINAL SURVEY		BY	DATE
NOTE BOOK NO.	SURVEYED		
	PLOTTED		
	TEMPLATE		
	AREAS		
	AREAS CHECKED		

ORIGINAL SURVEY		BY	DATE
NOTE BOOK NO.	SURVEYED		
	PLOTTED		
	TEMPLATE		
	AREAS		
	AREAS CHECKED		

..\XR9900A2A.DGN, ..\XPT0012A.DGN, ..\PRIT0012A.DGN, ..\XP17002A.DGN, ..\XW3001A.DGN, ..\XW10032A.DGN, ..\SL99R012A.DGN, ..\W99R012A.DGN, ..\TRI77022A.DGN, ..\
12-29-2005, rd357 T:\DOCUMENT\93750\CIVIL\DGN\XS70032A.KV.DGN
VARSINKZ
1 2 3 4 5 6 7 8 9 10 11 12 13 14 15 16 17 18 19 20 21 22 23 24 25 26 27 28 29 30 31 32 33 34 35 36 37 38 39 40 41 42 43 44 45 46 47 48 49 50 51 52 53 54 55 56 57 58 59 60 61 62 63

F.A.U. RTE.	SECTION	COUNTY	TOTAL SHEETS	SHEET NO.
83	*	COOK	631	543
STA.		TO STA.		
FED. ROAD DIST. NO.		ILLINOIS	FED. AID PROJECT	
* (2425 & 2626) R-2			CONTRACT NO. 62111	

LEGEND

EXISTING PAVEMENT

TEMPORARY PAVEMENT

POROUS GRANULAR EMBANKMENT

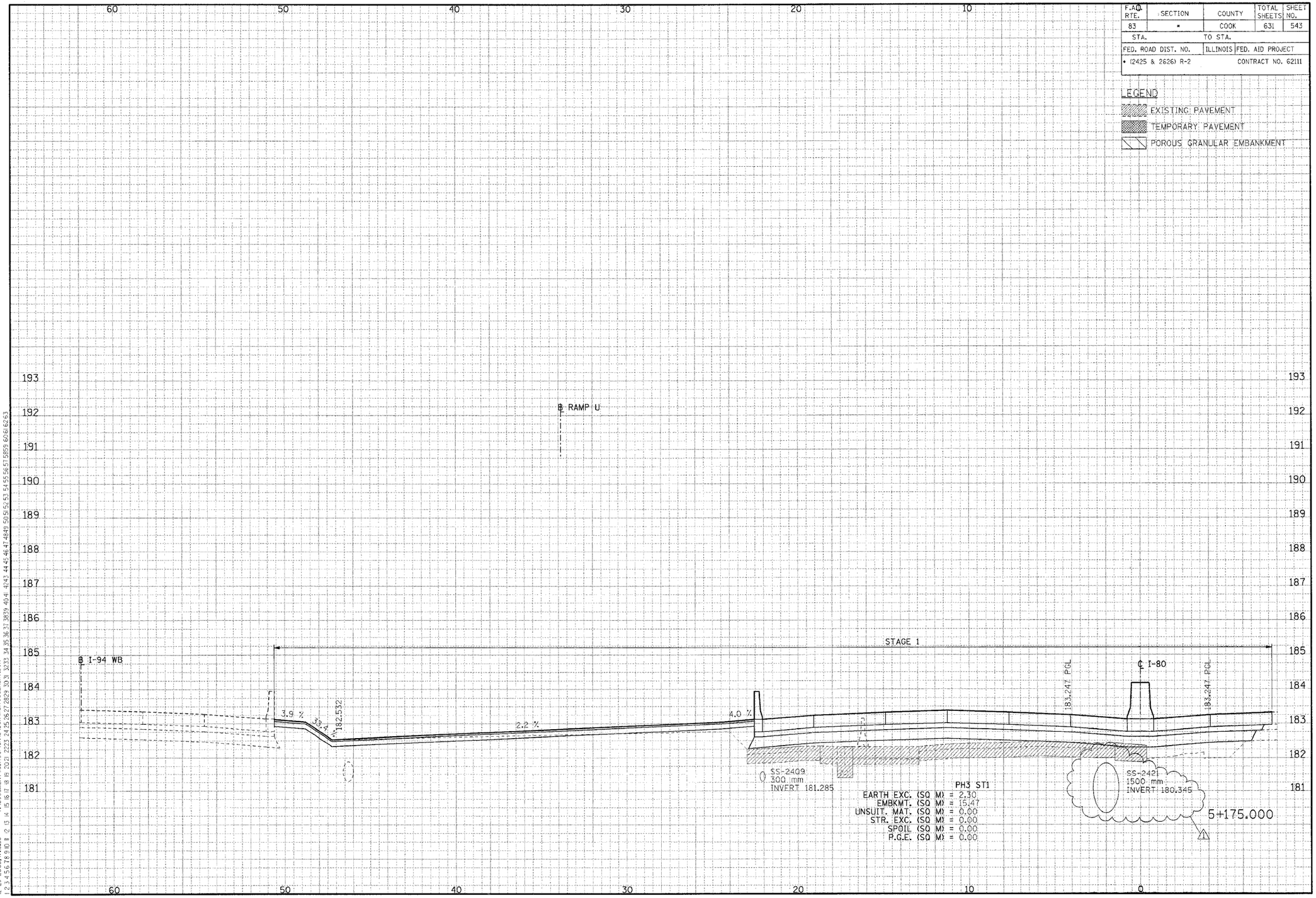

CROSS-SECTIONS FOR I-80/94

1 REVISED 01/04/2006. KV

ORIGINAL SURVEY | NOTE BOOK NO. | SURVEYED | PLOTTED | TEMPLATE | AREAS | AREAS CHECKED | BY | DATE

FINAL SURVEY | NOTE BOOK NO. | SURVEYED | PLOTTED | TEMPLATE | AREAS | AREAS CHECKED | BY | DATE

..\XR9900Z2A.DGN,..\XF70002A.DGN,..\P870002A.DGN,..\VP70032A.DGN,..\VW390E2A.DGN,..\VW70032A.DGN,..\VR70022A.DGN,..\XR30022A.DGN,..\PR9900Z2A.DGN,..\PR30022A.DGN,..\DR30032A.DGN,..\XW70032A.DGN,..\SL99R02A.DGN,..\N99R02A.DGN,..\TR77022A.DGN,..\
12-29-2005,17:35:58 T:\DOCUMENT\93750\CIVIL\DGN\XS70032A.KV.DGN VARSHNEY

F.A.U. RTE.	SECTION	COUNTY	TOTAL SHEETS	SHEET NO.
83	*	COOK	631	544
STA.		TO STA.		
FED. ROAD DIST. NO.		ILLINOIS	FED. AID PROJECT	
* (2425 & 2626) R-2			CONTRACT NO. 62111	

LEGEND

EXISTING PAVEMENT

TEMPORARY PAVEMENT

POROUS GRANULAR EMBANKMENT

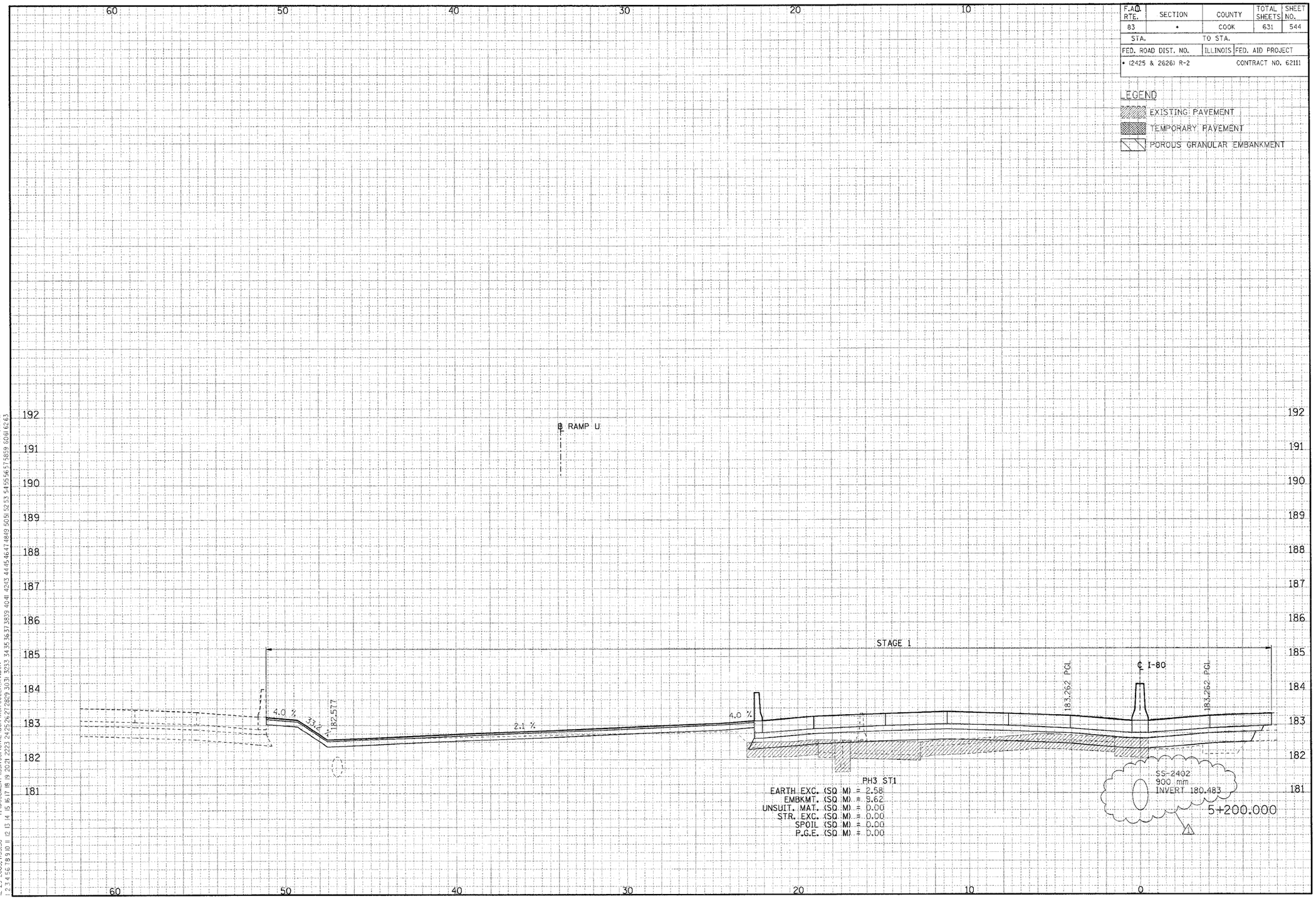

CROSS-SECTIONS FOR I-80/94

REVISED 01/04/2006, KV

ORIGINAL SURVEY	BY	DATE
NOTE BOOK	SURVEYED	
	PLOTTED	
	TEMPLATE	
	AREAS	
	AREAS CHECKED	

FINAL SURVEY	BY	DATE
NOTE BOOK	SURVEYED	
	PLOTTED	
	TEMPLATE	
	AREAS	
	AREAS CHECKED	

..\XR99002A.DGN, ..\XPR70002A.DGN, ..\XPR70032A.DGN, ..\XPR30002A.DGN, ..\XR30032A.DGN, ..\XR70002A.DGN, ..\XR70032A.DGN, ..\XR30022A.DGN, ..\XR99002A.DGN, ..\XPR30022A.DGN, ..\XPR99002A.DGN, ..\XR70022A.DGN, ..\
12-29-2005, FH:558 F:\DOCUMENT\93700\CIVIL\DGN\X570032A.KV.DGN VARSHNEY
2 3 4 5 6 7 8 9 10 11 12 13 14 15 16 17 18 19 20 21 22 23 24 25 26 27 28 29 30 31 32 33 34 35 36 37 38 39 40 41 42 43 44 45 46 47 48 49 50 51 52 53 54 55 56 57 58 59 60 61 62 63

F.A.U. RTE.	SECTION	COUNTY	TOTAL SHEETS	SHEET NO.
83	*	COOK	631	545
STA.		TO STA.		
FED. ROAD DIST. NO.		ILLINOIS	FED. AID PROJECT	
* (2425 & 2626) R-2			CONTRACT NO. 62111	

LEGEND

EXISTING PAVEMENT

TEMPORARY PAVEMENT

POROUS GRANULAR EMBANKMENT

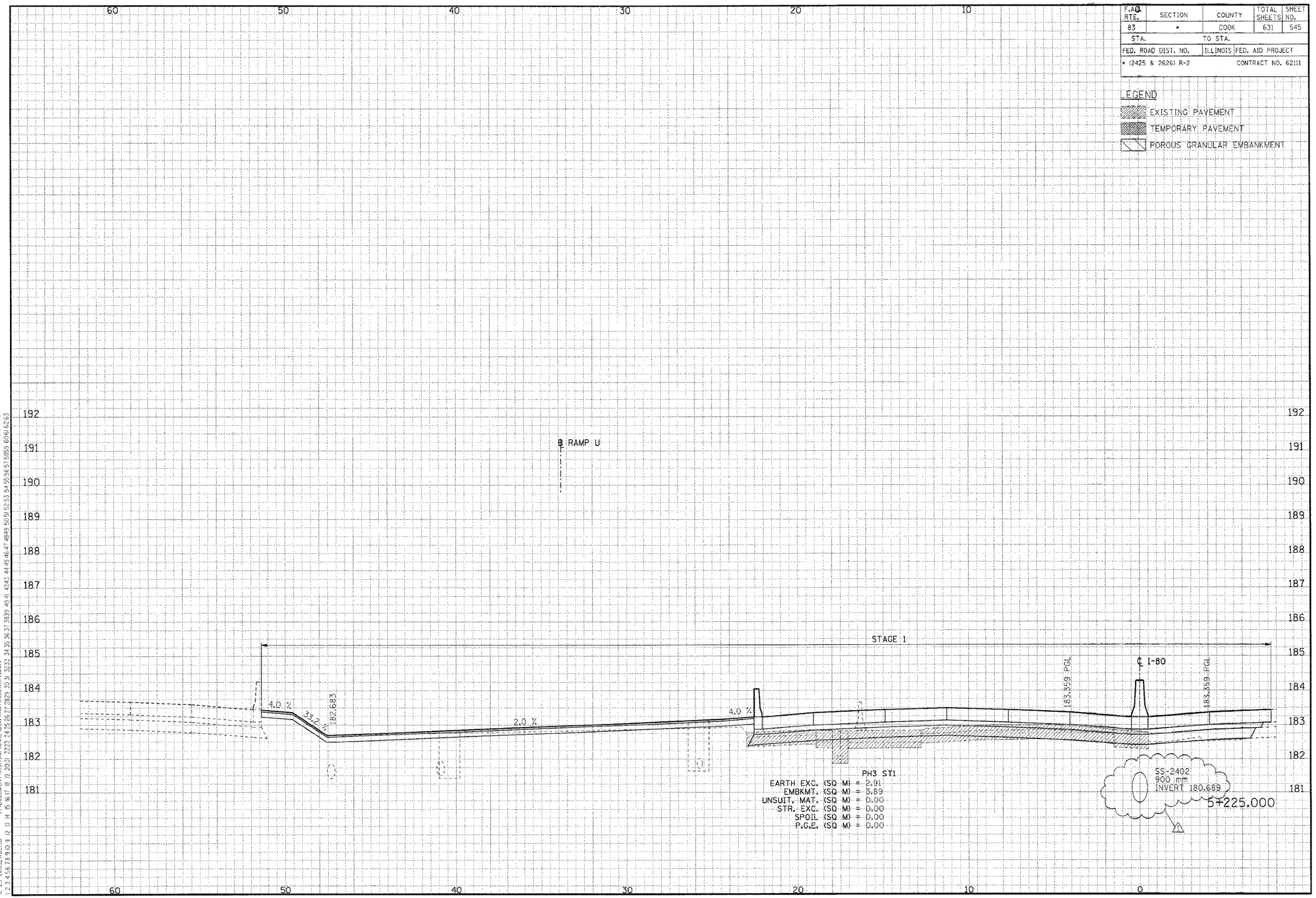

CROSS-SECTIONS FOR I-80/94

1 REVISED 01/04/2006. KV

FINAL SURVEY		BY	DATE
NOTE BOOK	SURVEYED		
	PLOTTED		
	TEMPLATE		
	AREAS		
	AREAS CHECKED		

..\XR99002A.DGN, ..\XRT0002A.DGN, ..\XRT0032A.DGN, ..\XRT0022A.DGN, ..\XR3002A.DGN, ..\XR3002A.DGN, ..\XR99002A.DGN, ..\XR3002A.DGN, ..\XR3002A.DGN, ..\XR99002A.DGN, ..\XR3002A.DGN, ..\XR3002A.DGN, ..\XR99002A.DGN, ..\XRT0032A.DGN, ..\XWT0032A.DGN, ..\SL99R002A.DGN, ..\U99R002A.DGN, ..\TR77002A.DGN, ..\

ORIGINAL SURVEY		BY	DATE
NOTE BOOK	SURVEYED		
	PLOTTED		
	TEMPLATE		
	AREAS		
	AREAS CHECKED		

02-29-2005, 11:35:58 T:\DOCUMENT\95175\CIVIL\DGN\X5170032A_KY.DGN

F.A.I. RTE.	SECTION	COUNTY	TOTAL SHEETS	SHEET NO.
83	*	COOK	631	546
STA.		TO STA.		
FED. ROAD DIST. NO.		ILLINOIS	FED. AID PROJECT	
* (2425 & 2626) R-2			CONTRACT NO. 62111	

LEGEND

- EXISTING PAVEMENT
- TEMPORARY PAVEMENT
- POROUS GRANULAR EMBANKMENT

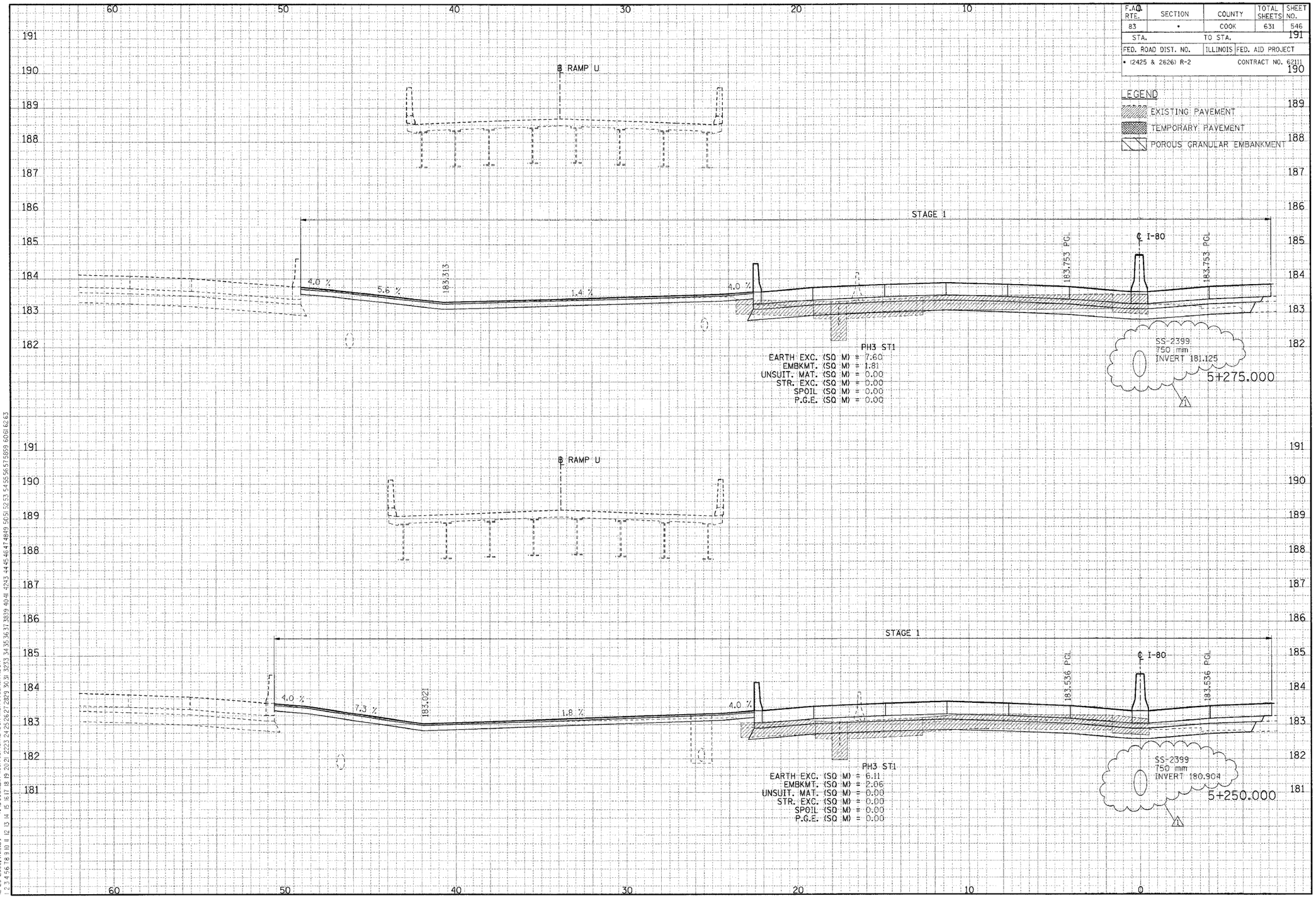

CROSS-SECTIONS FOR I-80/94

⚠ REVISED 01/04/2006, KV

FINAL SURVEY		BY	DATE
NOTE BOOK	SURVEYED		
	PLOTTED		
	TEMPLATE		
	AREAS		
	AREAS CHECKED		

ORIGINAL SURVEY		BY	DATE
NOTE BOOK	SURVEYED		
	PLOTTED		
	TEMPLATE		
	AREAS		
	AREAS CHECKED		

..\VR99002A.DGN, ..\VPT0002A.DGN, ..\VPT0002A.DGN, ..\VPT0002A.DGN, ..\VPR3002A.DGN, ..\DR3002A.DGN, ..\XWT0032A.DGN, ..\SL99002A.DGN, ..\VR3002A.DGN, ..\VR99002A.DGN, ..\VR99002A.DGN, ..\VR99002A.DGN, ..\VR77022A.DGN, ..\
12-29-2005,11:35
T:\DOCUMENT\93150\CIVIL\DGN\XSTR0032A.KV.DGN
VARSANKZ
5435565758596061626 3

F.A.U. RTE.	SECTION	COUNTY	TOTAL SHEETS	SHEET NO.
83	*	COOK	631	547
STA.		TO STA.		
FED. ROAD DIST. NO.		ILLINOIS	FED. AID PROJECT	
* (2425 & 2626) R-2			CONTRACT NO. 62111	

LEGEND

EXISTING PAVEMENT

TEMPORARY PAVEMENT

POROUS GRANULAR EMBANKMENT

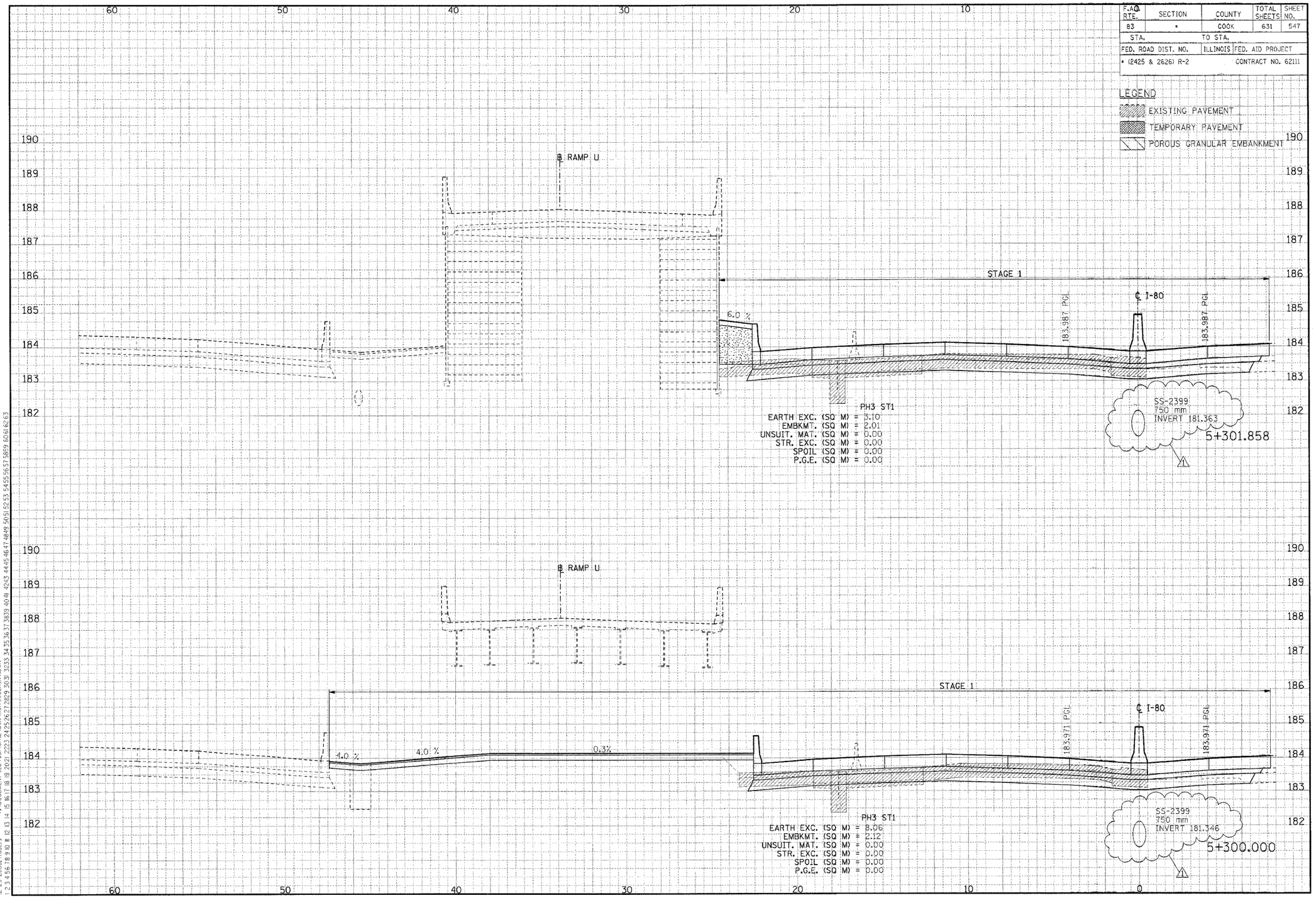

CROSS-SECTIONS FOR I-80/94

⚠1 REVISED 01/04/2006, KV

FINAL SURVEY		BY	DATE
NOTE BOOK NO.	SURVEYED		
	PLOTTED		
	TEMPLATE		
	AREAS		
	AREAS CHECKED		

ORIGINAL SURVEY		BY	DATE
NOTE BOOK NO.	SURVEYED		
	PLOTTED		
	TEMPLATE		
	AREAS		
	AREAS CHECKED		

..\XR9900ZA.DGN, ..\XP170012A.DGN, ..\PR170012A.DGN, ..\XP170032A.DGN, ..\XW170032A.DGN, ..\XR170022A.DGN, ..\XW830022A.DGN, ..\PR990012A.DGN, ..\PR830012A.DGN, ..\XW170032A.DGN, ..\XR830032A.DGN, ..\XW170032A.DGN, ..\XL99R012A.DGN, ..\XR99R012A.DGN, ..\TRI170022A.DGN, ..\

12-29-2005, 13:59 I:\DOCUMENT\93750\CIVIL\DGN\XS170032A_KV.DGN

YARSHNKZ

1 2 3 4 5 6 7 8 9 10 11 12 13 14 15 16 17 18 19 20 21 22 23 24 25 26 27 28 29 30 31 32 33 34 35 36 37 38 39 40 41 42 43 44 45 46 47 48 49 50 51 52 53 54 55 56 57 58 59 60 61 62 63

F.A.U. RTE.	SECTION	COUNTY	TOTAL SHEETS	SHEET NO.
83	*	COOK	631	548
STA.		TO STA.		
FED. ROAD DIST. NO.		ILLINOIS	FED. AID PROJECT	
* (2425 & 2626) R-2			CONTRACT NO. 62111	

LEGEND

- EXISTING PAVEMENT
- TEMPORARY PAVEMENT
- POROUS GRANULAR EMBANKMENT

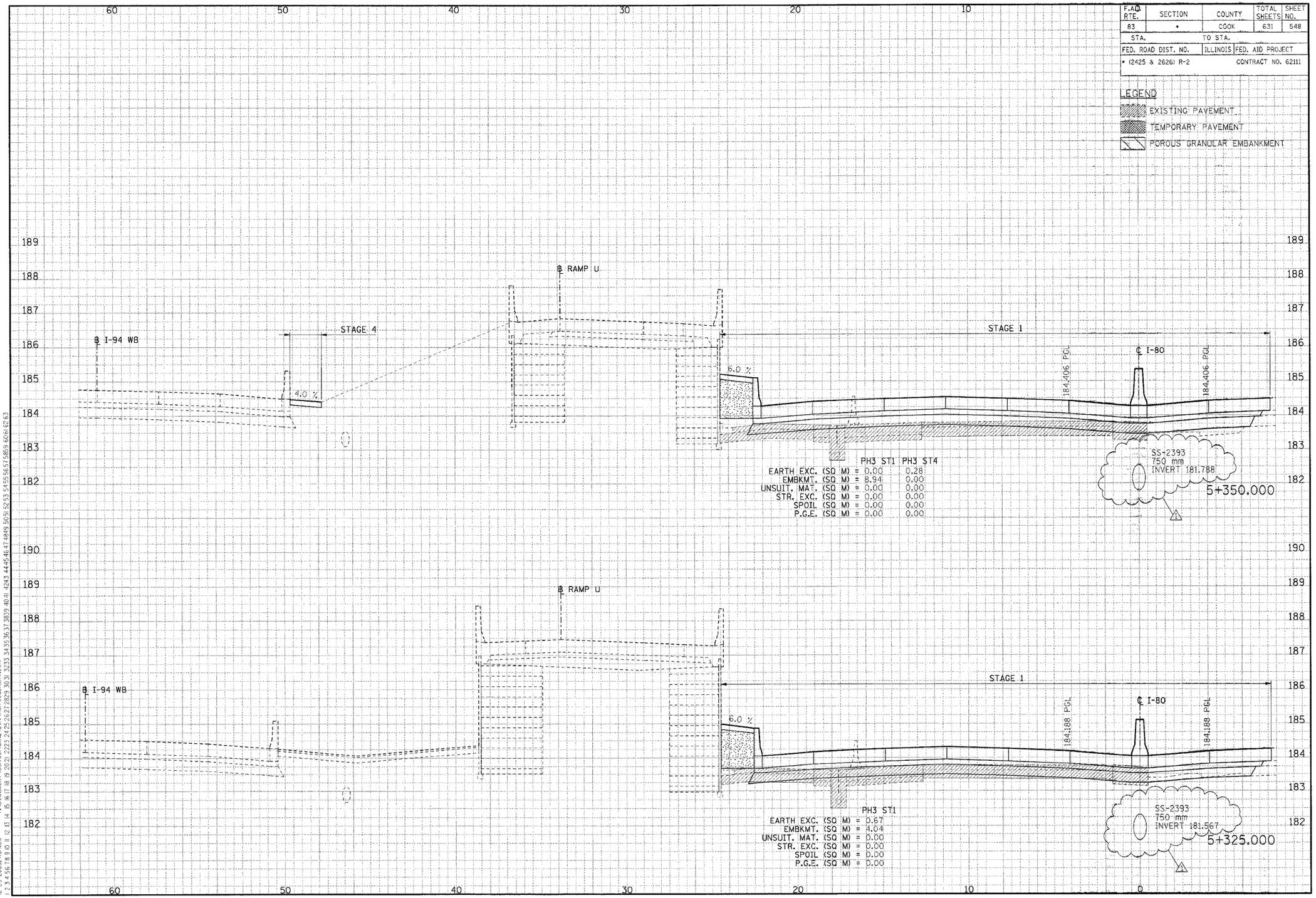

CROSS-SECTIONS FOR I-80/94

△1 REVISED 01/04/2006, KV

FINAL SURVEY		BY	DATE
NOTE BOOK	SURVEYED		
	PLOTTED		
	FORMULATE		
	AREAS		
	AREAS CHECKED		

ORIGINAL SURVEY		BY	DATE
NOTE BOOK	SURVEYED		
	PLOTTED		
	FORMULATE		
	AREAS		
	AREAS CHECKED		

..\XR99002A.DGN, ..\XP170022A.DGN, ..\XP170012A.DGN, ..\XP170032A.DGN, ..\XW170022A.DGN, ..\XL99R02A.DGN, ..\W99R02A.DGN, ..\YR170022A.DGN, ..\
..\XR99002A.DGN, ..\PR130022A.DGN, ..\PR130032A.DGN, ..\PR99002A.DGN, ..\PR350022A.DGN, ..\WR170022A.DGN, ..\XR350022A.DGN, ..\PR99002A.DGN, ..\PR350022A.DGN, ..\
12-29-2005, 7:14:00 T:\DOCUMENT\1831F30\CIVIL\DGN\X5170032A.KV.DGN
1 2 3 4 5 6 7 8 9 10 11 12 13 14 15 16 17 18 19 20 21 22 23 24 25 26 27 28 29 30 31 32 33 34 35 36 37 38 39 40 41 42 43 44 45 46 47 48 49 50 51 52 53 54 55 56 57 58 59 60 61 62 63

F.A.U. RTE.	SECTION	COUNTY	TOTAL SHEETS	SHEET NO.
83	*	COOK	631	549
STA.		TO STA.		
FED. ROAD DIST. NO.		ILLINOIS	FED. AID PROJECT	
* (2425 & 2626) R-2			CONTRACT NO. 62111	

LEGEND

- EXISTING PAVEMENT
- TEMPORARY PAVEMENT
- POROUS GRANULAR EMBANKMENT

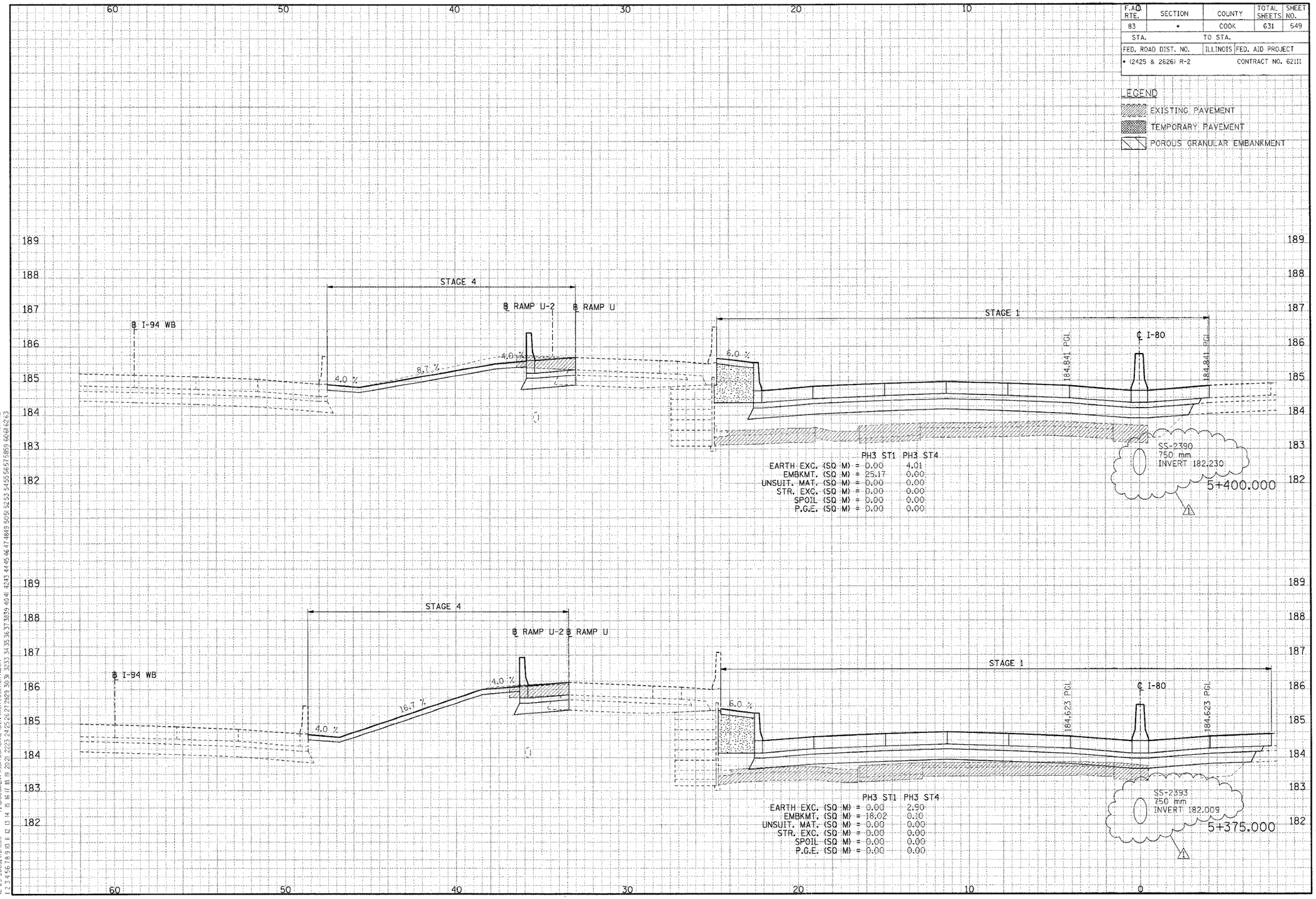

	PH3 ST1	PH3 ST4
EARTH EXC. (SQ M) =	0.00	4.01
EMBKMT. (SQ M) =	25.17	0.00
UNSUIT. MAT. (SQ M) =	0.00	0.00
STR. EXC. (SQ M) =	0.00	0.00
SPOIL (SQ M) =	0.00	0.00
P.G.E. (SQ M) =	0.00	0.00

	PH3 ST1	PH3 ST4
EARTH EXC. (SQ M) =	0.00	2.90
EMBKMT. (SQ M) =	18.02	0.10
UNSUIT. MAT. (SQ M) =	0.00	0.00
STR. EXC. (SQ M) =	0.00	0.00
SPOIL (SQ M) =	0.00	0.00
P.G.E. (SQ M) =	0.00	0.00

CROSS-SECTIONS FOR I-80/94

1 REVISED 01/04/2006, KV

..\X899002A.DGN, ..\PR7002A.DGN, ..\PR7002A.DGN, ..\PR3002A.DGN, ..\PR3002A.DGN, ..\PR3002A.DGN, ..\PR9002A.DGN, ..\PR9002A.DGN, ..\VR7002A.DGN, ..\VR7002A.DGN, ..\VR3002A.DGN, ..\VR3002A.DGN, ..\VR3

F.A.U. RTE.	SECTION	COUNTY	TOTAL SHEETS	SHEET NO.
83	*	COOK	631	550
STA.		TO STA.		
FED. ROAD DIST. NO.		ILLINOIS	FED. AID PROJECT	
* (2425 & 2626) R-2			CONTRACT NO. 62111	

LEGEND

EXISTING PAVEMENT

TEMPORARY PAVEMENT

POROUS GRANULAR EMBANKMENT

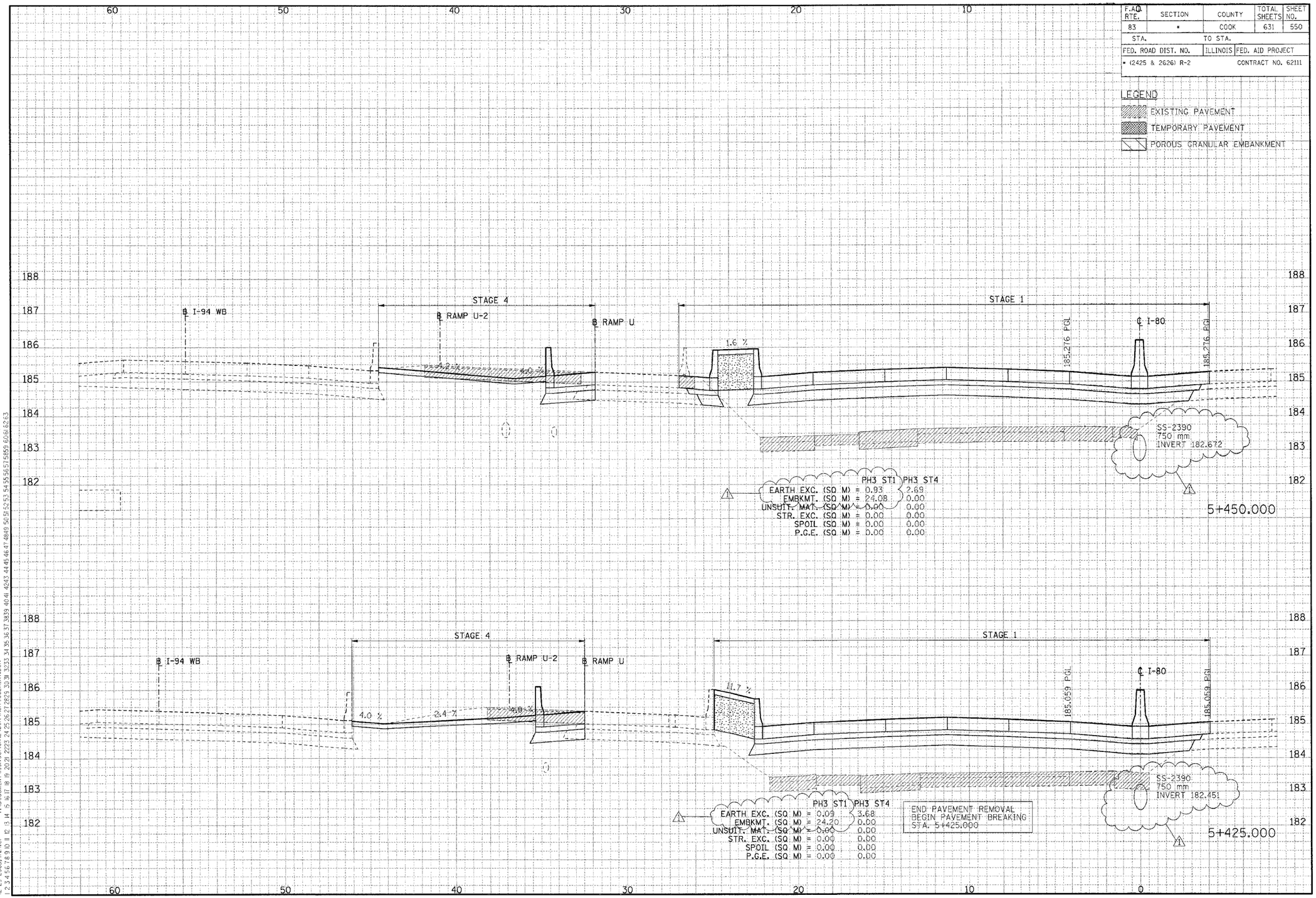

CROSS-SECTIONS FOR I-80/94

1 REVISED 01/04/2006, KV

FINAL SURVEY	SURVEYED	BY	DATE
NOTE BOOK	PLOTTED		
	TEMPLATE		
NO.	AREAS		
	AREAS CHECKED		

..\XR99002A.DGN, ..\XP10002A.DGN, ..\XP17002A.DGN, ..\XW30002A.DGN, ..\XR70022A.DGN, ..\XR30022A.DGN, ..\XP99002A.DGN, ..\XP10002A.DGN, ..\XP30002A.DGN, ..\XP70002A.DGN, ..\XW70002A.DGN, ..\SL99R02A.DGN, ..\W99R02A.DGN, ..\TR77022A.DGN, ..\
12-29-2005, 17:44:01 F:\DOCUMENT\99750\CIVIL\DGN\X370032A.KV.DGN VARSHNYZ

F.A.U. RTE.	SECTION	COUNTY	TOTAL SHEETS	SHEET NO.
83	*	COOK	631	551
STA.		TO STA.		
FED. ROAD DIST. NO.		ILLINOIS	FED. AID PROJECT	
* (2425 & 2626) R-2			CONTRACT NO. 62111	

LEGEND

- EXISTING PAVEMENT
- TEMPORARY PAVEMENT
- POROUS GRANULAR EMBANKMENT

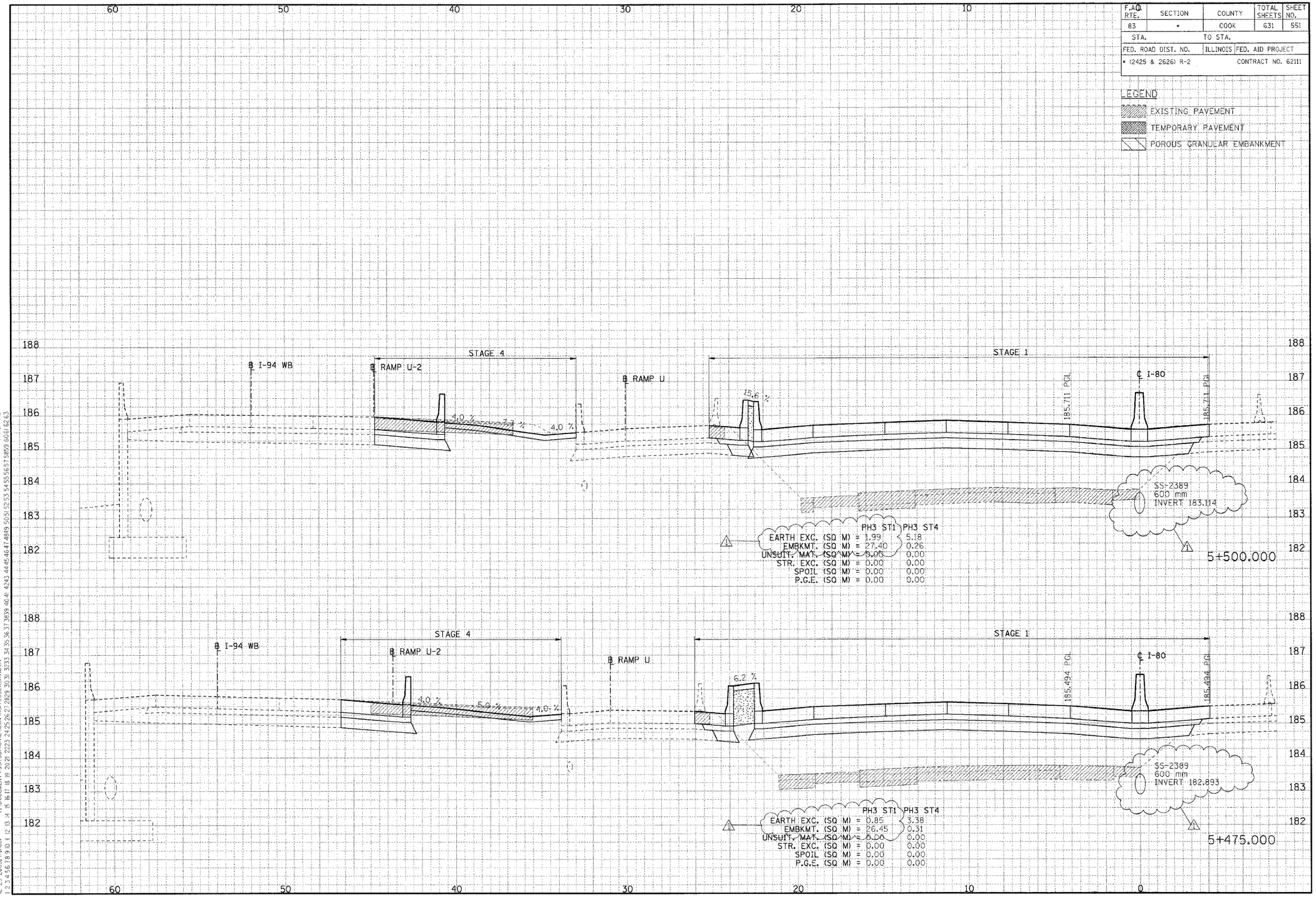

CROSS-SECTIONS FOR I-80/94

REVISED 01/04/2006, KV

FINAL SURVEY		BY	DATE
NOTE BOOK	SURVEYED		
	PLOTTED		
	TEMPLATE		
	AREAS		
NO.	AREAS CHECKED		

ORIGINAL SURVEY		BY	DATE
NOTE BOOK	SURVEYED		
	PLOTTED		
	TEMPLATE		
	AREAS		
NO.	AREAS CHECKED		

..\XR99002A.DGN, ..\PR10002A.DGN, ..\PR10002A.DGN, ..\PR30002A.DGN, ..\DR30032A.DGN, ..\XW10032A.DGN, ..\XR30022A.DGN, ..\PR99002A.DGN, ..\PR99002A.DGN, ..\PR10002A.DGN, ..\XW33002A.DGN, ..\XR70022A.DGN, ..\XR70022A.DGN, ..\VR77022A.DGN, ..\
12-29-2005, Td4d0 T:\DOCUMENT\99750\CIVIL\DGN\X370032A.KV.DGN VARSHNEZ

F.A.U. RTE.	SECTION	COUNTY	TOTAL SHEETS	SHEET NO.
83	*	COOK	631	552
STA.		TO STA.		
FED. ROAD DIST. NO.		ILLINOIS	FED. AID PROJECT	
* (2425 & 2626) R-2			CONTRACT NO. 62111	

LEGEND

- EXISTING PAVEMENT
- TEMPORARY PAVEMENT
- POROUS GRANULAR EMBANKMENT

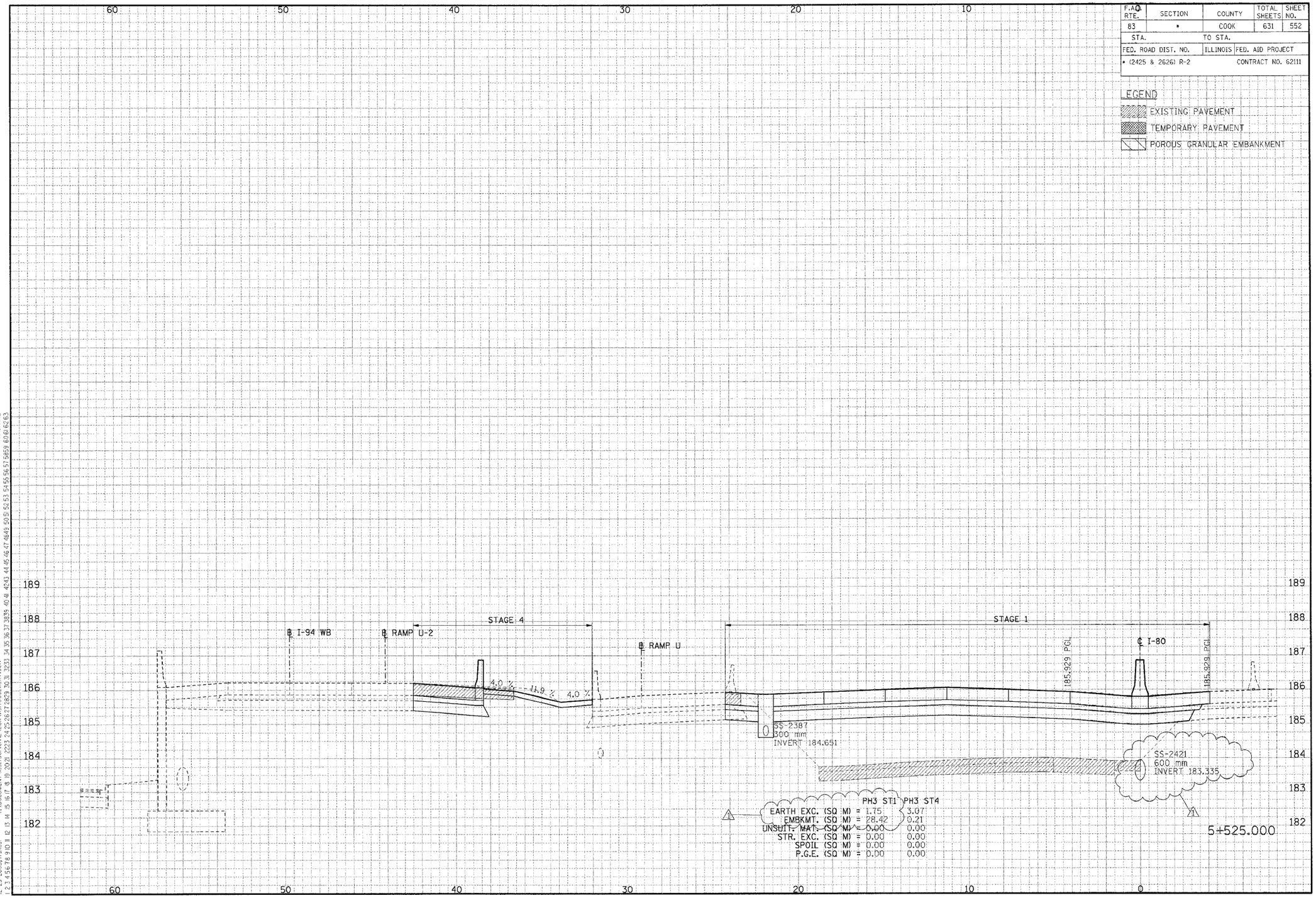

	PH3 ST1	PH3 ST4
EARTH EXC. (SQ M) =	1.75	3.07
EMBKMT. (SQ M) =	28.42	0.21
UNSUIT. MAT. (SQ M) =	0.00	0.00
STR. EXC. (SQ M) =	0.00	0.00
SPOIL (SQ M) =	0.00	0.00
P.G.E. (SQ M) =	0.00	0.00

CROSS-SECTIONS FOR I-80/94

△1 REVISED 01/04/2006, KV

ORIGINAL SURVEY | SURVEYED | PLOTTED | TEMPLATE | AREAS | AREAS CHECKED | BY | DATE

FINAL SURVEY | NOTE BOOK NO. | SURVEYED | PLOTTED | TEMPLATE | AREAS | AREAS CHECKED | BY | DATE

..\XR99002A.DGN, ..\XR30022A.DGN, ..\PR99002A.DGN, ..\PR30022A.DGN, ..\XR70022A.DGN, ..\XR30022A.DGN, ..\PR70022A.DGN, ..\PR30022A.DGN, ..\OR30032A.DGN, ..\XM70032A.DGN, ..\XM70032A.DGN, ..\SL99002A.DGN, ..\V99R002A.DGN, ..\TR77022A.DGN, ..\

12-29-2005, 17:44:0 T:\DOCUMENT\93750\CIVIL\DGN\XS70032A.KV.DGN VARSHNKZ

1 2 3 4 5 6 7 8 9 10 11 12 13 14 15 16 17 18 19 20 21 22 23 24 25 26 27 28 29 30 31 32 33 34 35 36 37 38 39 40 41 42 43 44 45 46 47 48 49 50 51 52 53 54 55 56 57 58 59 60 61 62 63

F.A.I. RTE.	SECTION	COUNTY	TOTAL SHEETS	SHEET NO.
83	*	COOK	631	553
STA.		TO STA.		
FED. ROAD DIST. NO.		ILLINOIS	FED. AID PROJECT	
* (2425 & 2626) R-2			CONTRACT NO. 62111	

LEGEND

- EXISTING PAVEMENT
- TEMPORARY PAVEMENT
- POROUS GRANULAR EMBANKMENT

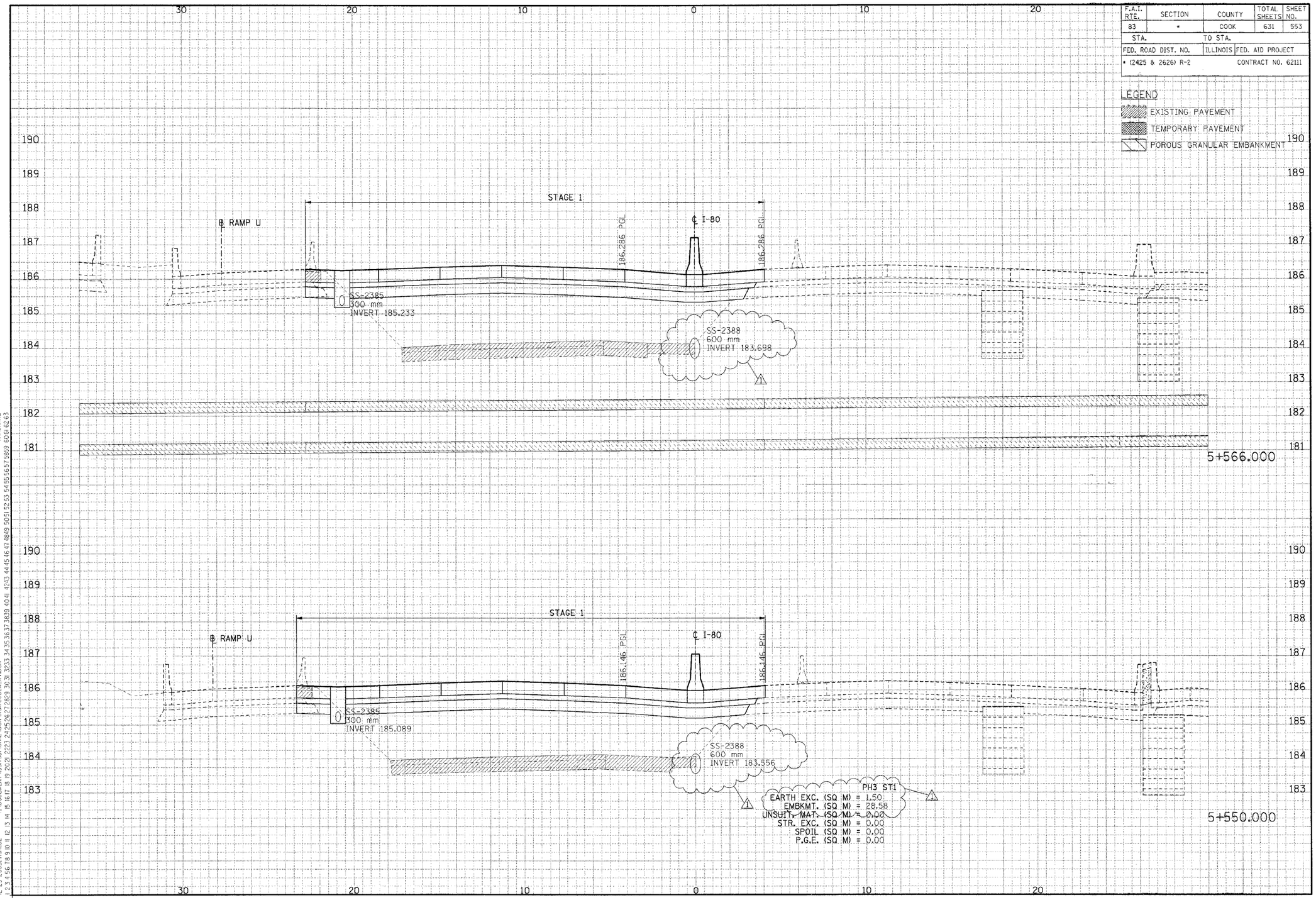

CROSS-SECTIONS FOR I-80/94

1 REVISED 01/04/2006, KV

FINAL SURVEY	SURVEYED	BY	DATE
NOTE BOOK	PLOTTED		
NO.	TEMPLATE		
	AREAS		
	AREAS CHECKED		

ORIGINAL SURVEY	SURVEYED	BY	DATE
NOTE BOOK	PLOTTED		
NO.	TEMPLATE		
	AREAS		
	AREAS CHECKED		

..\X99002A.DGN, ..\XPT0002A.DGN, ..\XPRT0002A.DGN, ..\XPT0032A.DGN, ..\XWT0032A.DGN, ..\XR30002A.DGN, ..\XR30022A.DGN, ..\XR99002A.DGN, ..\XPR30002A.DGN, ..\XPR30032A.DGN, ..\XWT0032A.DGN, ..\TRT7022A.DGN, ..\
(2-23-2005,17:14:02 :\DOCUMENT\93750\CIVIL\DGN\XSRT0032A.KV.DGN VARSHNKZ
1 2 3 4 5 6 7 8 9 10 11 12 13 14 15 16 17 18 19 20 21 22 23 24 25 26 27 28 29 30 31 32 33 34 35 36 37 38 39 40 41 42 43 44 45 46 47 48 49 50 51 52 53 54 55 56 57 58 59 60 61 62 63

F.A.I. RTE.	SECTION	COUNTY	TOTAL SHEETS	SHEET NO.
83	*	COOK	631	554
STA.		TO STA.		
FED. ROAD DIST. NO.		ILLINOIS	FED. AID PROJECT	
* (2425 & 2626) R-2			CONTRACT NO. 62111	

LEGEND

- EXISTING PAVEMENT
- TEMPORARY PAVEMENT
- POROUS GRANULAR EMBANKMENT

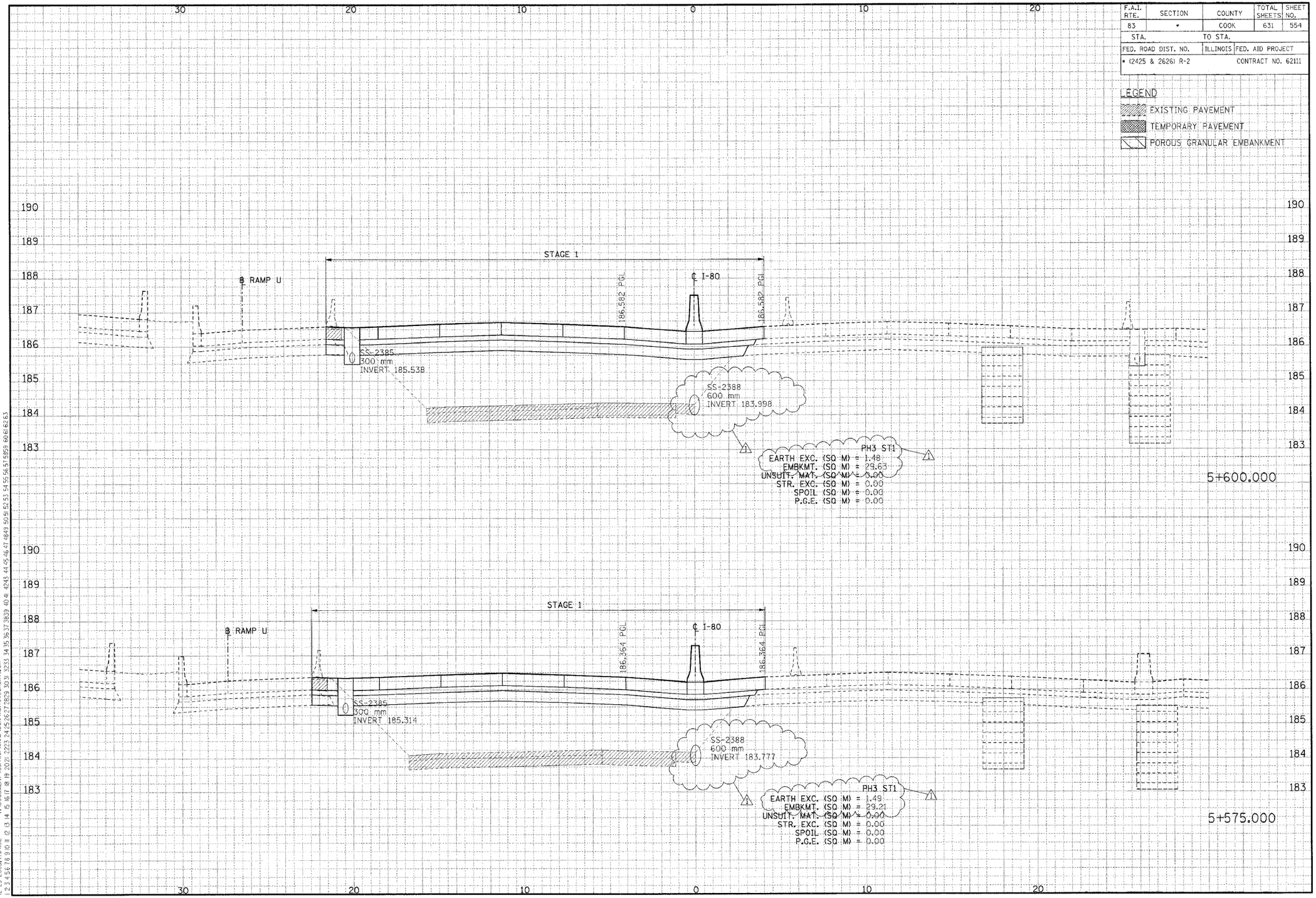

CROSS-SECTIONS FOR I-80/94

1 REVISED 01/04/2006, KV

F.A.I. RTE.	SECTION	COUNTY	TOTAL SHEETS	SHEET NO.
83	*	COOK	631	555
STA.		TO STA.		
FED. ROAD DIST. NO.		ILLINOIS	FED. AID PROJECT	
* (2425 & 2626) R-2			CONTRACT NO. 62111	

LEGEND

EXISTING PAVEMENT

TEMPORARY PAVEMENT

POROUS GRANULAR EMBANKMENT

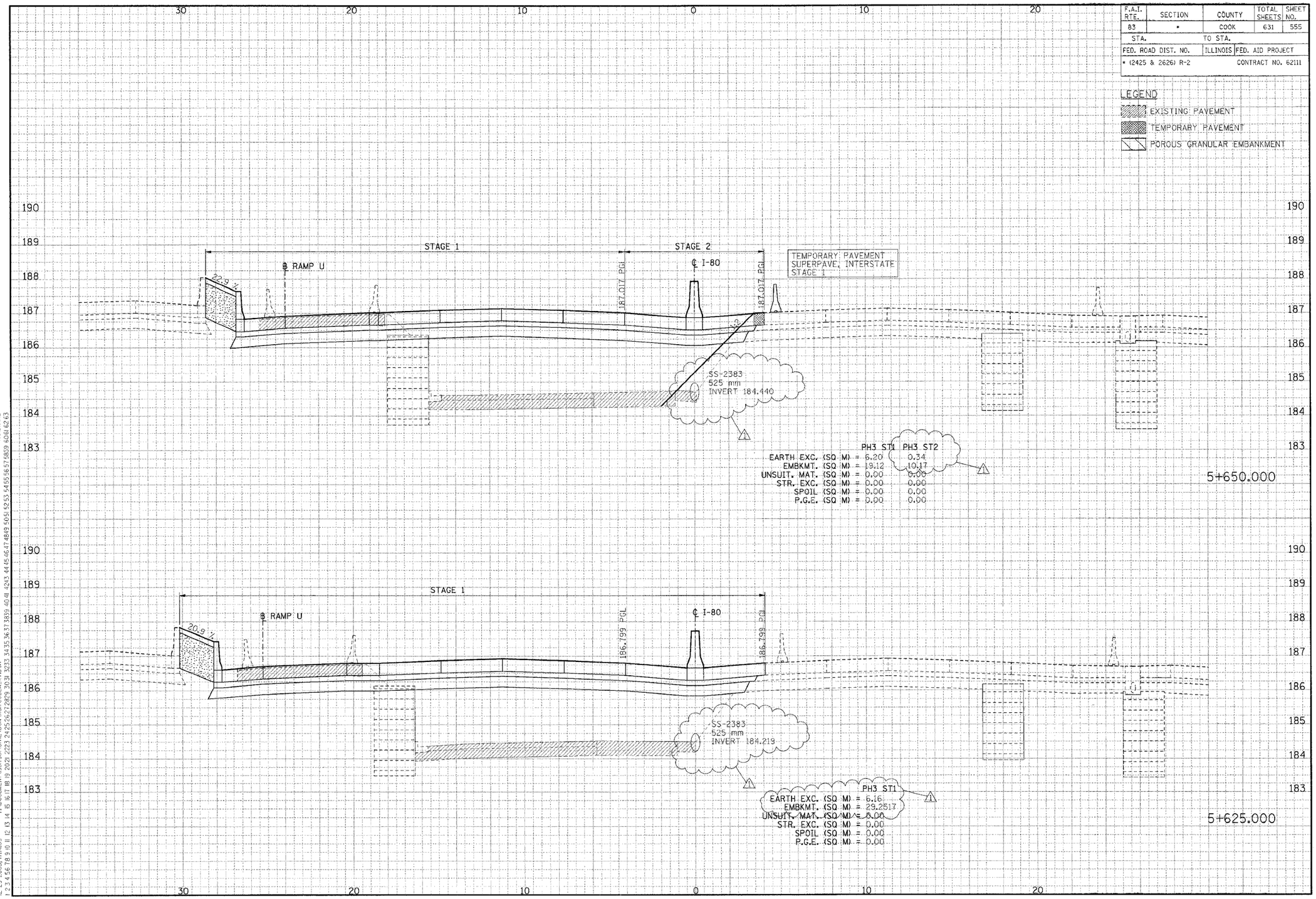

CROSS-SECTIONS FOR I-80/94

REVISED 01/04/2006, KV

FINAL SURVEY	BY	DATE
SURVEYED		
PLOTTED		
TEMPLATE		
AREAS		
AREAS CHECKED		

NOTE BOOK NO.

..\XR99002A.DGN, ..\XP170032A.DGN, ..\VW170032N.DGN, ..\VR170032A.DGN, ..\VP170032A.DGN, ..\VP99002A.DGN, ..\VR30022A.DGN, ..\HR70022A.DGN, ..\VW30012A.DGN, ..\VR30022A.DGN, ..\VP30012A.DGN, ..\VP99002A.DGN, ..\VR99002A.DGN, ..\VR170032A.DGN, ..\VW170032N.DGN, ..\VP170032A.DGN, ..\VR170022A.DGN, ..\VW170022A.DGN, ..\

ORIGINAL SURVEY	BY	DATE
SURVEYED		
PLOTTED		
TEMPLATE		
AREAS		
AREAS CHECKED		

NOTE BOOK NO.

..\XR99002A.DGN, ..\XP170032A.DGN, ..\XP170032N.DGN, ..\XP170032A.DGN, ..\XW30012A.DGN, ..\VW170032A.DGN, ..\VR30022A.DGN, ..\VP99002A.DGN, ..\VR99002A.DGN, ..\VR170022A.DGN, ..\VW170022A.DGN, ..\

12-29-2005, ITA403 I:\DOCUMENT\93F50\CIVIL\DGN\XSF70032A_KV.DGN VARSHNKZ

1 2 3 4 5 6 7 8 9 10 11 12 13 14 15 16 17 18 19 20 21 22 23 24 25 26 27 28 29 30 31 32 33 34 35 36 37 38 39 40 41 42 43 44 45 46 47 48 49 50 51 52 53 54 55 56 57 58 59 60 61 62 63

F.A.I. RTE.	SECTION	COUNTY	TOTAL SHEETS	SHEET NO.
83	*	COOK	631	556
STA.		TO STA.		
FED. ROAD DIST. NO.		ILLINOIS	FED. AID PROJECT	
* (2425 & 2626) R-2			CONTRACT NO. 62111	

LEGEND

- EXISTING PAVEMENT
- TEMPORARY PAVEMENT
- POROUS GRANULAR EMBANKMENT

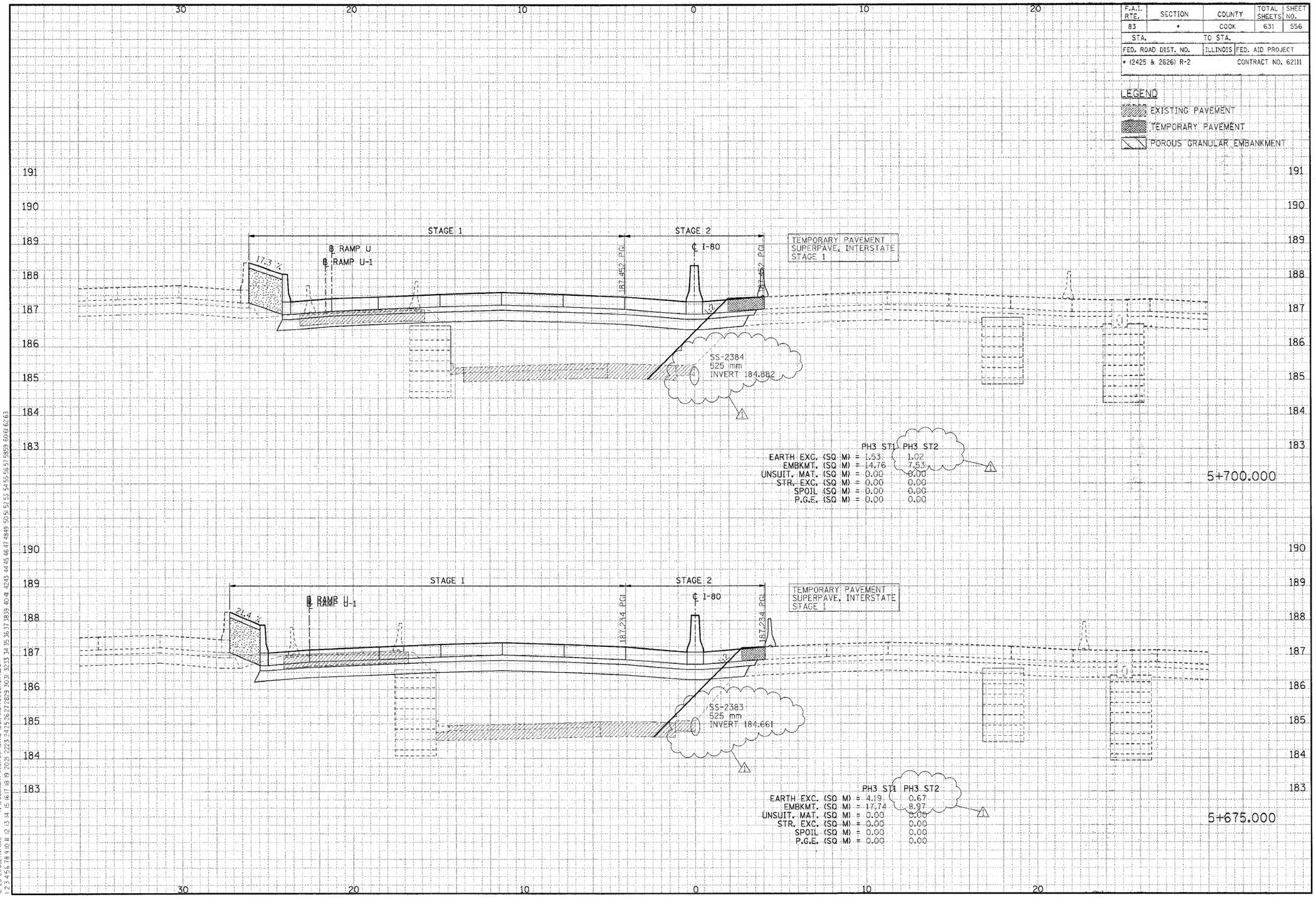

CROSS-SECTIONS FOR I-80/94

REVISED 01/04/2006, KV

FINAL SURVEY		BY	DATE
NOTE BOOK	SURVEYED		
	PLOTTED		
	TEMPLATE		
	AREAS		
	AREAS CHECKED		

ORIGINAL SURVEY		BY	DATE
NOTE BOOK	SURVEYED		
	PLOTTED		
	TEMPLATE		
	AREAS		
	AREAS CHECKED		

MSL

..\VR9900ZA.DGN, ..\XP70002A.DGN, ..\PRT0002A.DGN, ..\VPT0032A.DGN, ..\XMT0002A.DGN, ..\HRT0002A.DGN, ..\XRJ0022A.DGN, ..\PRJ0002A.DGN, ..\PRJ9500ZA.DGN, ..\PRJ0002A.DGN, ..\DRJ0032A.DGN, ..\VWT0032A.DGN, ..\SL9R002A.DGN, ..\SL9R001A.DGN, ..\TRT1022A.DGN, ..\
12-29-2005, 11:14:03 E:\DOCUMENTS\93150\CIVIL\DGN\SJT0032A_KV.DGN
WASHRKZ
1 2 3 4 5 6 7 8 9 10 11 12 13 14 15 16 17 18 19 20 21 22 23 24 25 26 27 28 29 30 31 32 33 34 35 36 37 38 39 40 41 42 43 44 45 46 47 48 49 50 51 52 53 54 55 56 57 58 59 60 61 62 63

F.A.I. RTE.	SECTION	COUNTY	TOTAL SHEETS	SHEET NO.
83	*	COOK	631	557
STA.		TO STA.		
FED. ROAD DIST. NO.		ILLINOIS	FED. AID PROJECT	
* (2425 & 2626) R-2			CONTRACT NO. 62111	

LEGEND

- EXISTING PAVEMENT
- TEMPORARY PAVEMENT
- POROUS GRANULAR EMBANKMENT

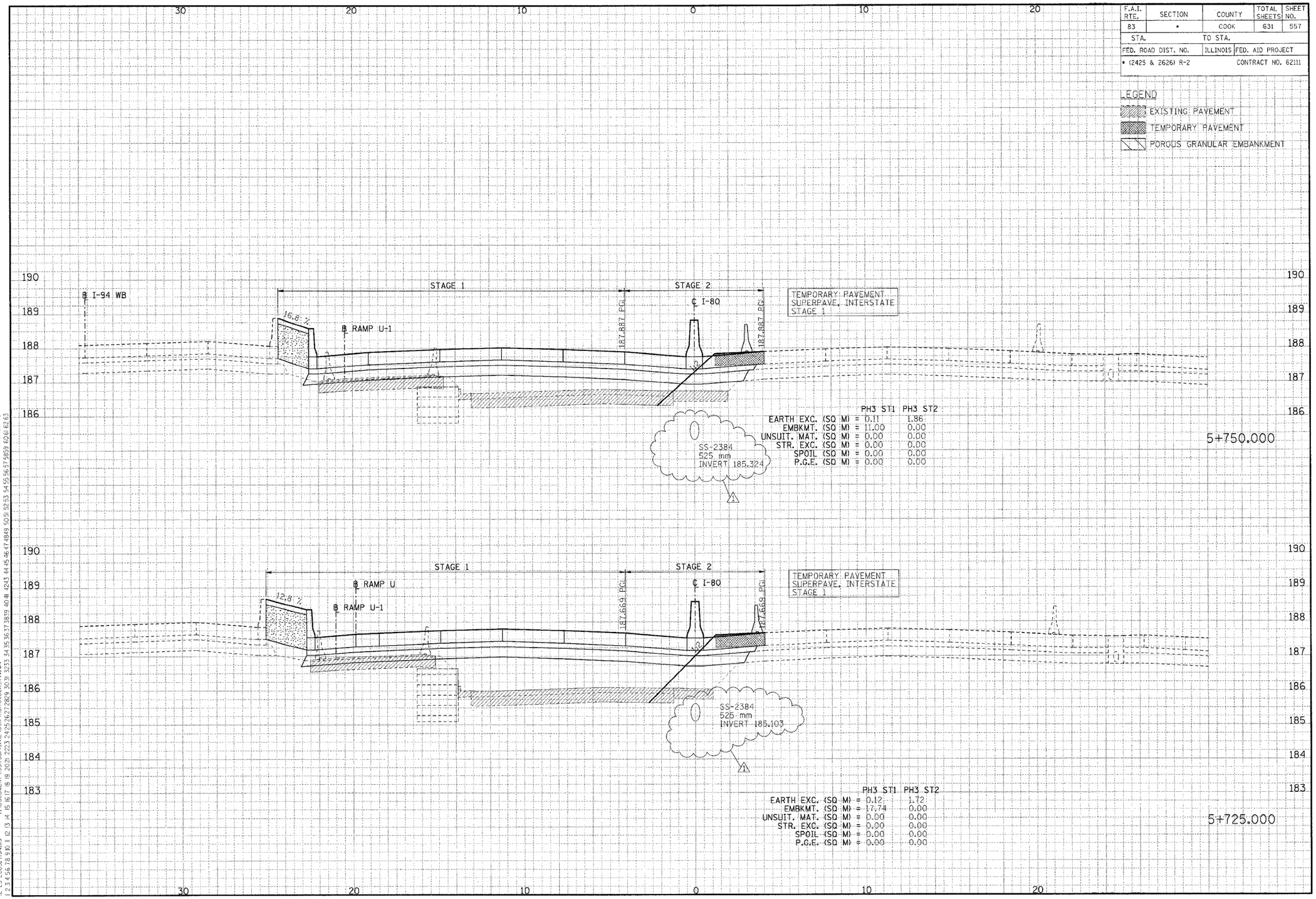

	PH3 ST1	PH3 ST2
EARTH EXC. (SQ M) =	0.11	1.86
EMBKMT. (SQ M) =	11.00	0.00
UNSUIT. MAT. (SQ M) =	0.00	0.00
STR. EXC. (SQ M) =	0.00	0.00
SPOIL (SQ M) =	0.00	0.00
P.G.E. (SQ M) =	0.00	0.00

	PH3 ST1	PH3 ST2
EARTH EXC. (SQ M) =	0.12	1.72
EMBKMT. (SQ M) =	17.74	0.00
UNSUIT. MAT. (SQ M) =	0.00	0.00
STR. EXC. (SQ M) =	0.00	0.00
SPOIL (SQ M) =	0.00	0.00
P.G.E. (SQ M) =	0.00	0.00

CROSS-SECTIONS FOR I-80/94

1 REVISED 01/04/2006, KV

FINAL SURVEY — SURVEYED / PLOTTED / TEMPLATE / AREAS / AREAS CHECKED — BY — DATE

ORIGINAL SURVEY — SURVEYED / PLOTTED / TEMPLATE / AREAS / AREAS CHECKED — BY — DATE

..\XR99002A.DGN, ..\PR70012A.DGN, ..\PR70002A.DGN, ..\PR30002A.DGN, ..\VR30002A.DGN, ..\VR70022A.DGN, ..\VR90002A.DGN, ..\HR70022A.DGN, ..\VW30002A.DGN, ..\VR70032A.DGN, ..\VR99R002A.DGN, ..\TRIT002A.DGN, ..\
12-29-2005, 17:49:33 I:\DOCUMENTS\93750\CIVIL\DGN\VS170032A_KV.DGN